VBRF SERIES

Bathroom extractor fans

VBRF

DECORATIVE PLASTIC GRILLE

DIRECT / SHORT DUCT EXTRACTION



100-300	03	50 Hz
Nominal airflow / m^3/h	Models in the range	230 V / Single phase

01 / PRODUCT & TECHNICAL DATA

Fresh air for everyday spaces.



01 Decorative grille

A moulded plastic front grille and casing for bathroom, toilet and local room extraction.

02 Compact duct connection

The rear circular spigot supports direct extraction or short duct runs. Use the actual ØE dimensions on page 4.

03 Single-phase operation

Three 50 Hz models with a 230 V supply. Select airflow against the resistance of the connected duct system.

NOMINAL RATINGS / 50 Hz

Model	Airflow m^3/h	Power W	Speed rpm	Current A	Weight kg	LpA dB(A) / 3 m
VBRF 100	100	23	2300	0.14	0.5	40
VBRF 125	200	25	2300	0.15	0.55	41
VBRF 150	300	33	2750	0.20	0.71	43

Airflow is the nominal maximum, not a selected duty point. Nominal motor ratings differ from operating-point power, speed and current in FSP. Sound pressure is the supplied reference at 3 m.

COMMON MOTOR & OPERATING DATA

230 V / 1 phase / 50 Hz / 2 poles / Class B / IP20 / IE1. Motor operating range: -20 to +40 °C. Maximum transported-air temperature: +40 °C. Installation suitability follows the actual unit rating.

Current FSP ratings and listed curves are used throughout this catalogue.

02 / AIR PERFORMANCE

Fan Performance Curves

VBRF 100

230 V / 1 phase / 50 Hz

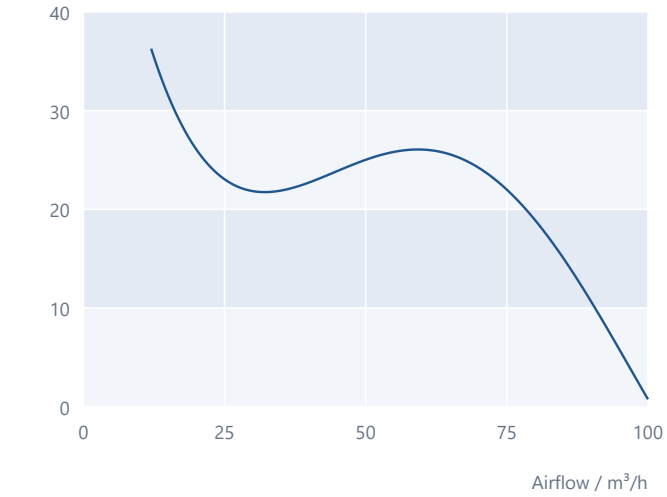

VBRF 125

230 V / 1 phase / 50 Hz

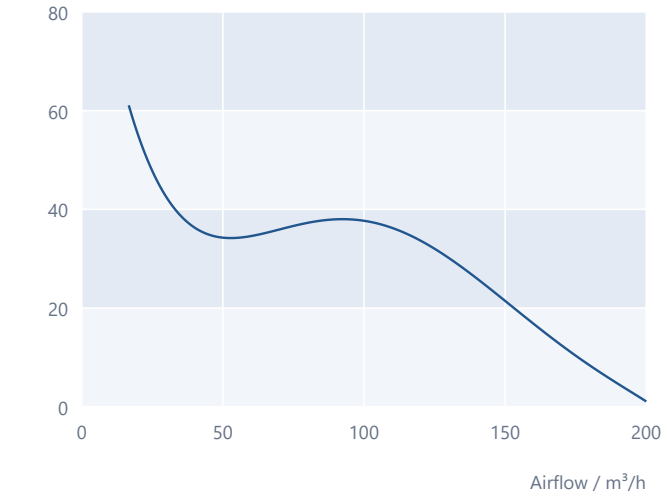

VBRF 150

230 V / 1 phase / 50 Hz

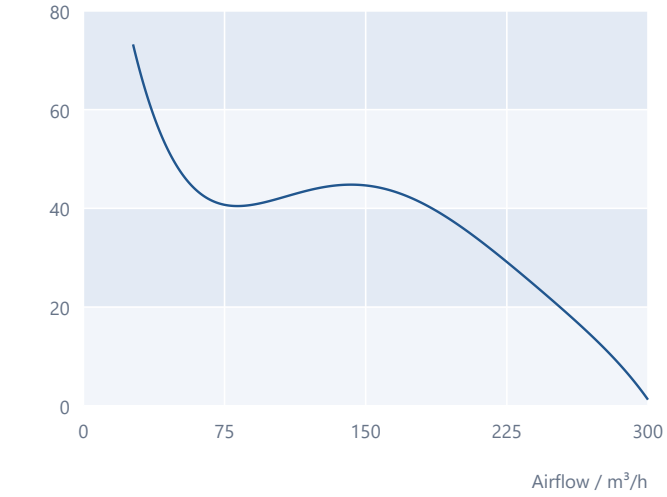

SELECT THE DUTY POINT

Airflow meets resistance.

Choose a model where the required airflow and system pressure meet its curve. Allow for losses through the duct, bends and discharge terminal.

READING THE CURVES

Each model uses its own pressure scale. Curves retain their shape and supplied flow domain; no zero-flow extrapolation is added. The curve endpoints remain slightly above zero pressure.

50 Hz static pressure curves follow the VBRF FSP record; supplied shapes and flow domains retained.

03 / DIMENSIONAL DATA

Plan the wall and duct connection.

SERIES DIMENSION DRAWING / A-E

All dimensions in mm

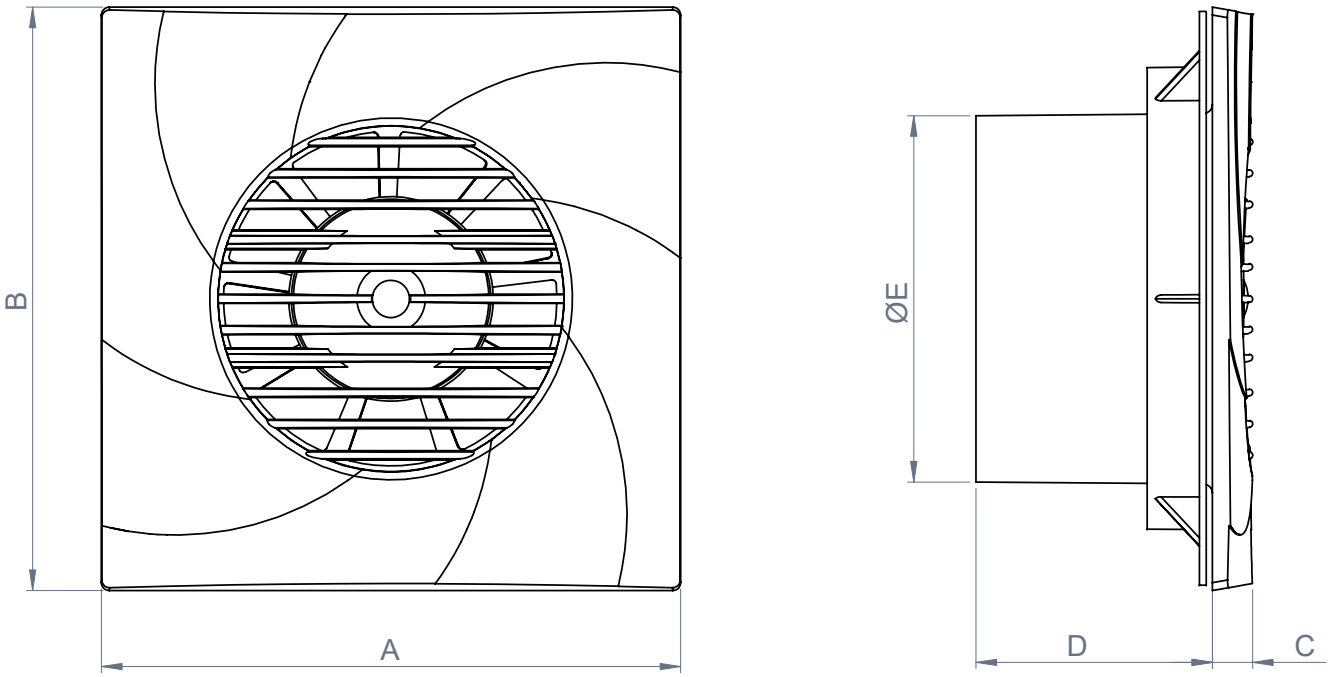

Model	Nominal size	A	B	C	D	ØE
VBRF 100	100	160	160	12	70	97.5
VBRF 125	125	188	188	14	76	118
VBRF 150	150	208	208	14	118	145

A / B: front face dimensions. C: front-section depth. D: rear spigot depth. ØE: listed duct connection diameter. Model names denote nominal size; ØE is the drawing value, so VBRF 125 retains ØE = 118 mm.

Use the selected model's dimension row for the connection. The drawing is a series reference; confirm the actual unit and mating duct before installation.

04 / INSTALLATION & ACOUSTICS

Keep the airflow path clear.

01 Direct or short duct extraction

Provide a firm wall fixing and an unobstructed discharge path. Keep the grille accessible for cleaning. Select the fan at the system duty rather than nominal airflow alone.

02 Motor and service conditions

Supply: 230 V single phase / 50 Hz. Current FSP rating: Class B / IP20 / IE1. Motor ambient range: -20 to +40 °C; transported air: maximum +40 °C. Isolate the supply before servicing.

REFERENCE SOUND POWER / INLET & OUTLET

Octave-band LwA / dB(A)

Model	Side	65 Hz	125 Hz	250 Hz	500 Hz	1k Hz	2k Hz	4k Hz	8k Hz	Total
VBRF 100	Inlet	11	35	41	43	40	36	34	27	47
VBRF 100	Outlet	36	49	52	52	42	38	34	25	56
VBRF 125	Inlet	15	41	42	41	40	38	31	24	48
VBRF 125	Outlet	56	52	53	50	43	40	29	22	59
VBRF 150	Inlet	18	37	45	45	43	40	33	25	50
VBRF 150	Outlet	36	49	55	49	40	40	32	20	57

The chart labels its lowest frequency band as 65 Hz; this label is retained. Inlet/outlet sound power is distinct from sound pressure at 3 m on page 2. These are reference values, not a predicted installed-room sound level.

ELECTRICAL CONNECTION

The English connection diagram on page 6 reproduces the supplied VBRF two-wire arrangement. Match the actual unit terminal identification before connection.

05 / ELECTRICAL CONNECTION

Electrical Connection Diagram

VBRF 100 / VBRF 125 / VBRF 150

230 V / 1 phase / 50 Hz

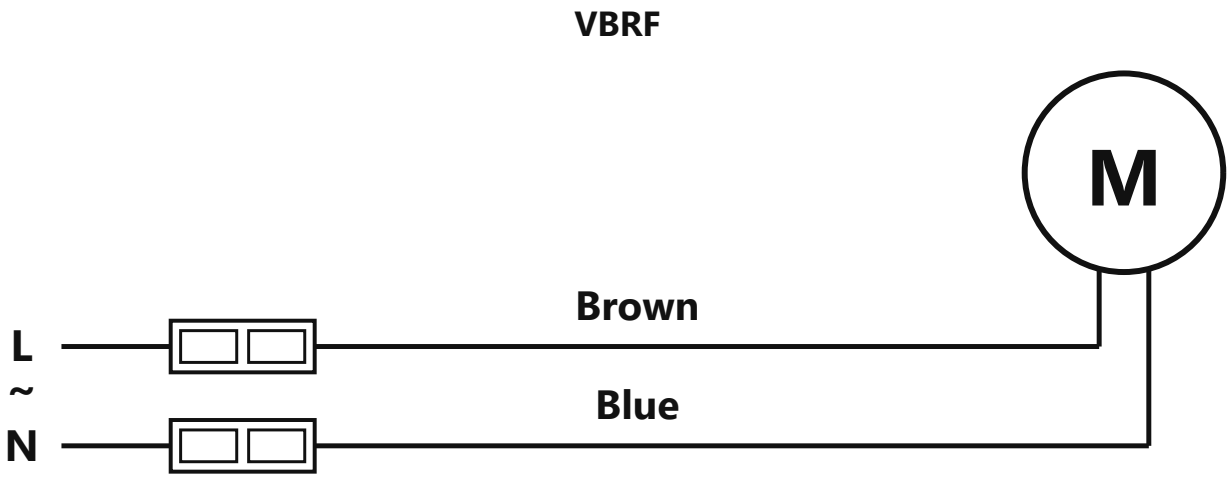

CONNECTION KEY

Marking	Conductor / function
L	Brown / live
N	Blue / neutral
M	Fan motor

This diagram reproduces the wiring supplied for the VBRF series. Brown and Blue identify the two conductors in that diagram. No additional terminals, capacitor or protective-earth conductor are added to the supplied arrangement.

Connect according to the actual fan nameplate and terminal identification. Isolate the supply before making or inspecting connections.

VBRF

Bathroom extractor fans

