VLF-CP SERIES

Axial car park jet fans

VLF-CP

F300/F400°C 2h

ALUMINIUM AIRFOIL IMPELLER

UNIDIRECTIONAL / REVERSIBLE

F300°C / F400°C

120-minute smoke duty options

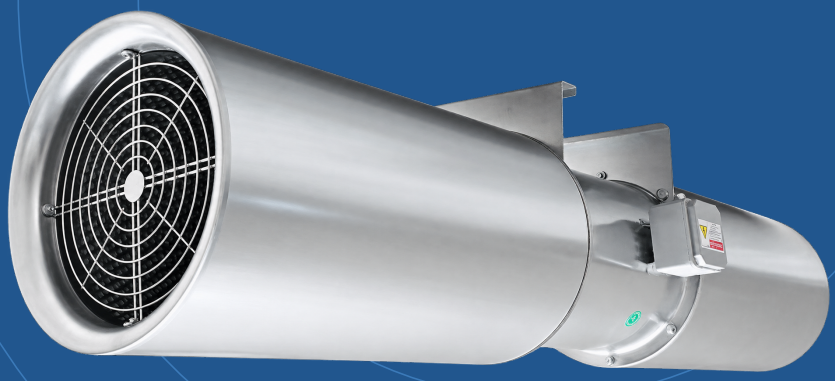

315-400
Fan diameter / mm

06
Directional models

Two speeds
400 V / 50 Hz

01 / PRODUCT OVERVIEW

Direct the air. Define the duty.

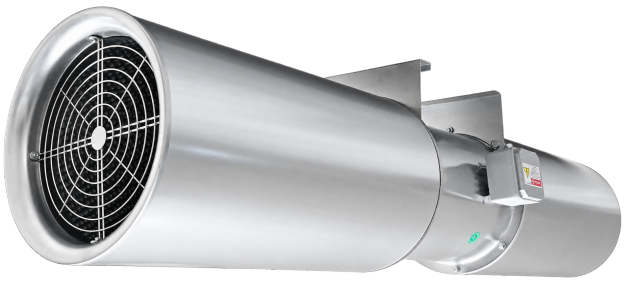

01 Impulse ventilation

Ceiling-mounted axial jet fans for car park and tunnel ventilation. A cylindrical casing houses an aluminium-alloy airfoil impeller.

02 Two directional models

UND provides one-way airflow. RVS provides reversible airflow. Select the direction code independently of the pictured configuration.

03 Two nominal speeds

Each model includes the supplied low-speed and high-speed airflow, thrust, motor power, current and sound-pressure values.

F300
300°C / 120 minutes

F400
400°C / 120 minutes

SHARED F300°C / F400°C SELECTION DATA

The two smoke-duty options share nominal performance and dimensions. Specify the required class for the supplied unit. Both VLF-CP and VLF-CPS image configurations are presented on the next page.

Selection parameter	Range
Fan diameters	315 / 355 / 400 mm
Motor supply / poles	400 V / 3 phase / 50 Hz / 2-4 poles
Motor insulation / protection	Class H / IP55

F300°C / F400°C denotes the smoke-duty specification, not the ordinary ambient operating limit. Final classification and motor data follow the supplied unit documentation.

02 / PRODUCT CONFIGURATIONS

Two configurations. One selection range.



Circular grille configuration

Cylindrical casing with a rounded end ring and concentric wire safety grille. Shown with ceiling mounting brackets and an external terminal box.



Guide-bar end configuration

Extended cylindrical end ring with three horizontal guide bars and an inner mesh guard. Shown with ceiling mounting brackets and an external terminal box.

VLF-CP / VLF-CPS identify the pictured configurations. UND / RVS identifies airflow direction independently. Both configurations use the shared nominal selection data; separate VLF-CPS attenuation figures are not specified. Confirm final assembly dimensions and acoustic specification when ordering.

03 / NOMINAL PERFORMANCE

Compare both operating speeds.

SHARED F300°C / F400°C DATA / 400 V / 50 Hz

Model VLF-CP	Speed	Airflow m^3/h	Thrust N	Motor kW	Speed rpm	LpA at 3 m dB(A)
315-UND	Low	2 300	6.3	0.2	1390	49
315-UND	High	4 600	25	0.8	2810	66
315-RVS	Low	2 250	6	0.2	1390	45
315-RVS	High	4 500	24	0.8	2810	62
355-UND	Low	3 450	11.3	0.25	1435	52
355-UND	High	6 900	45	1.1	2900	70
355-RVS	Low	3 270	10	0.25	1435	48
355-RVS	High	6 540	41	1.1	2900	66
400-UND	Low	5 000	18.7	0.37	1420	53
400-UND	High	10 000	75	1.5	2845	72
400-RVS	Low	4 875	17.5	0.37	1420	45
400-RVS	High	9 750	70	1.5	2845	68

NOMINAL SPEED POINTS

Each row is a supplied nominal speed condition. Airflow and thrust refer to the same condition. Pressure curves and fan/system duty calculations are not supplied for this jet fan range.

LpA is the sound-pressure level at 3 m. Octave-band data and separate acoustic attenuation for the VLF-CPS pictured option are not supplied. The table does not infer intermediate speeds or reverse-direction performance beyond the stated RVS model data.

04 / ELECTRICAL & MODEL DATA

Select the direction and motor.

400 V / THREE PHASE / 50 Hz / TWO-SPEED 2-4 POLE MOTOR

Model VLF-CP	Low speed A	High speed A	Weight kg	Protection	Insulation	Efficiency
315-UND	0.6	1.91	91	IP55	Class H	IE1
315-RVS	0.6	1.91	93	IP55	Class H	IE1
355-UND	0.55	2.2	98	IP55	Class H	IE1
355-RVS	0.55	2.2	100	IP55	Class H	IE1
400-UND	0.8	3.4	105	IP55	Class H	IE1
400-RVS	0.8	3.4	107	IP55	Class H	IE1

UND Unidirectional

One-way airflow configuration. The model suffix UND applies at each of the three fan diameters.

RVS Reversible

Bidirectional configuration. Select the RVS model using its own stated nominal values; do not substitute the UND performance.

ORDERING INFORMATION

State series, diameter, direction code, pictured configuration and required smoke class. Example: VLF-CP 355-RVS, VLF-CPS image configuration, F400°C / 120 minutes. Confirm the final assembly designation and nameplate before ordering.

Motor efficiency is IE1. The minimum ordinary operating temperature is -20°C; a maximum ordinary ambient limit is not supplied. F300°C / F400°C is a separate smoke-duty rating.

05 / DIMENSIONAL DATA

Plan the ceiling installation.

VLF-CP FAMILY DRAWING / ALL DIMENSIONS IN mm

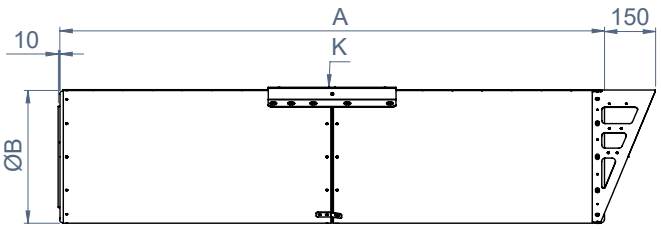

UNIDIRECTIONAL JET FAN

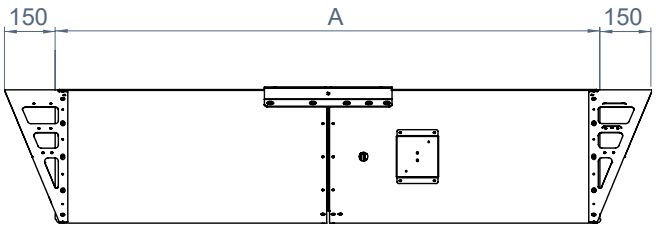

REVERSIBLE JET FAN

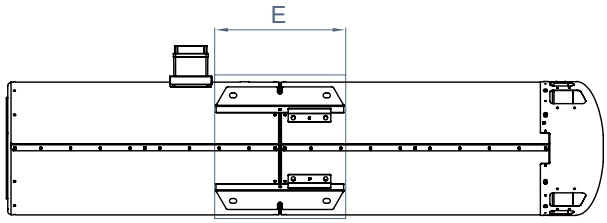

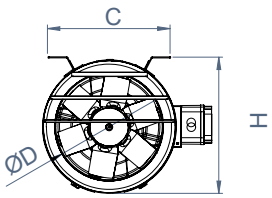

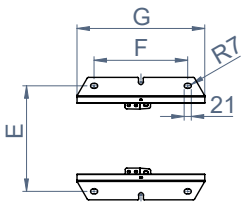

View K

Size	A	B	C	D	E	F	G	H
315	1600	390	360	315	310	275	375	400
355	1700	455	410	355	360	275	375	465
400	1850	500	450	400	400	350	450	510

The original vector drawing distinguishes unidirectional and reversible end arrangements. A-H retain the FSP dimension labels and numerical values. The three size rows apply to both direction codes and both smoke-duty options.

The drawing is the VLF-CP family reference supplied in FSP. A separate dimension drawing for the pictured VLF-CPS arrangement is not available; confirm the final overall size, end arrangement and mounting details for the supplied unit.

06 / CONNECTION & INSTALLATION

Connect the specified two-speed motor.

TWO-SPEED CONNECTION REFERENCE

The diagram shows low-speed star (Y) and high-speed double-star (YY) connections. Terminal numbers, links and phase labels are retained from the original vector diagram.

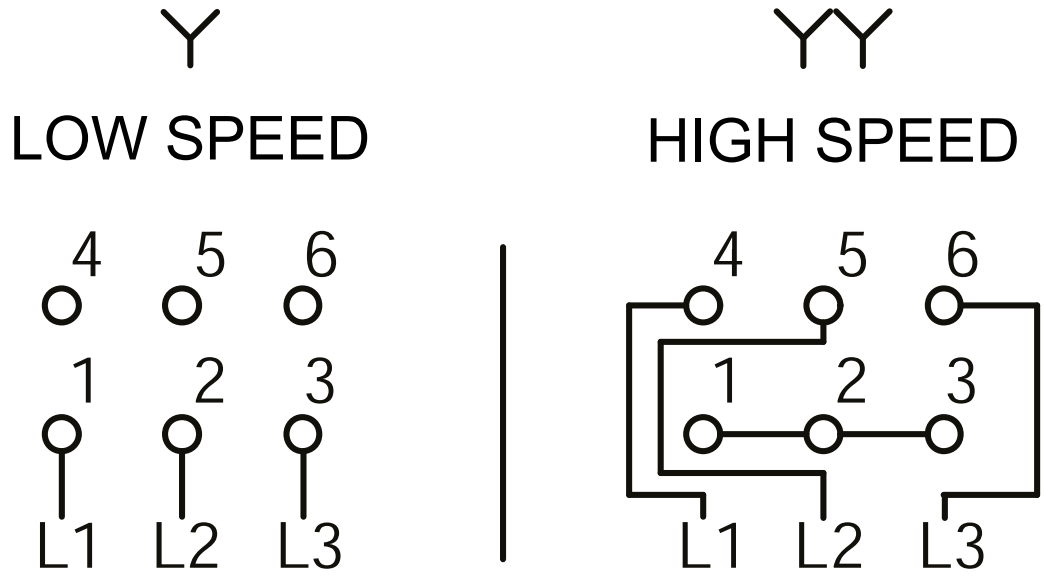

VLF-CP / 400 V / 3 PHASE / 50 Hz / 2-4 POLES

This is the connection reference supplied for the VLF-CP family. The final two-speed winding and terminal identification must match the supplied motor nameplate and connection sheet. Select UND or RVS and use the corresponding supplied control arrangement.

CEILING SUPPORTS & AIR PATH

Provide suitable ceiling supports and maintenance access. Keep the intake and jet discharge clear. Coordinate fan locations and airflow direction with the car park ventilation design and smoke-control project requirements.

Isolate the supply before installation or inspection. Emergency operation, motor protection and switching follow the supplied unit documentation and project specification.

VLF-CP

Axial car park jet fans

F300°C / F400°C

VOLTVENT®
VENTILATION SYSTEMS

info@voltvent.com | voltvent.com