VOLTVENT®
VENTILATION SYSTEMS

VKEF SERIES

Kitchen exhaust fans

VKEF

MOTOR OUTSIDE THE AIRSTREAM

GALVANIZED STEEL CASING



315-500
Duct connection range / mm

05
Models in the range

50 Hz
Three-phase AC

info@voltvent.com | voltvent.com

01 / PRODUCT & TECHNICAL DATA

Compact form. Clear construction.



01 Motor outside the airstream

Motor separated from the transported kitchen exhaust air and accessible through the service compartment.

02 Aluminium impeller

Centrifugal impeller for duct exhaust and kitchen hood applications.

03 Galvanized steel casing

Sheet-metal casing with an inspection hatch and circular duct connections. No additional coating.

MODEL SPECIFICATIONS

Nominal reference values / 50 Hz

Model	Duct / mm	Max. airflow* m^3/h	Reference power W / at 0 Pa	Reference speed rpm / at 0 Pa	Supply V / phase
VKEF 315	315	1600	250	1469	380 / 3
VKEF 355	355	2300	370	1471	380 / 3
VKEF 400	400	3300	550	1478	380 / 3
VKEF 450	450	5000	750	1454	380 / 3
VKEF 500	500	7000	1100	1462	380 / 3

* Maximum airflow is the upper limit of the supplied performance-curve range, rounded to whole m^3/h; it is not a selected duty-point value. Other values are 50 Hz catalogue references at 0 Pa. Actual input power and speed depend on the duty point. Motor current and unit weight were not supplied.

02 / AIR PERFORMANCE / 01

Fan Performance Curves

VKEF 315

3~380 V / 50 Hz

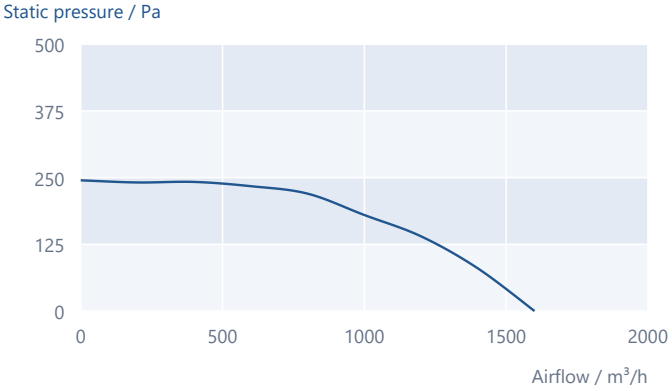

VKEF 355

3~380 V / 50 Hz

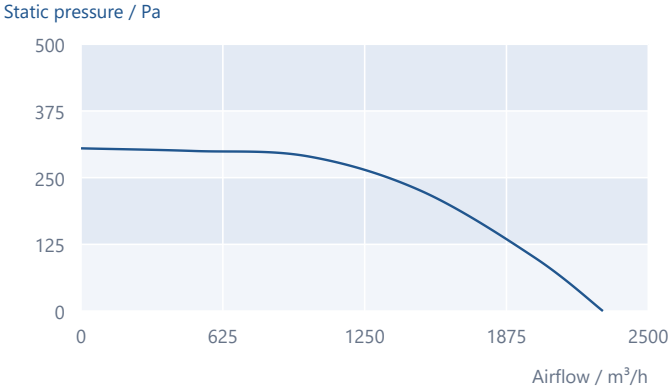

VKEF 400

3~380 V / 50 Hz

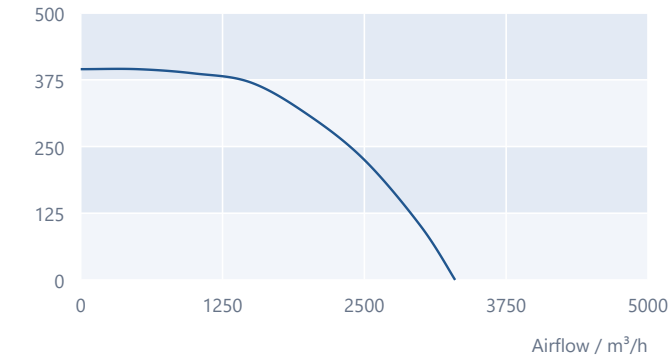

VKEF 450

3~380 V / 50 Hz

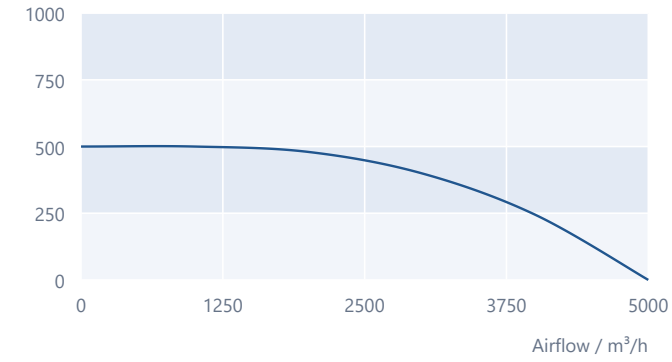

VKEF 500

3~380 V / 50 Hz

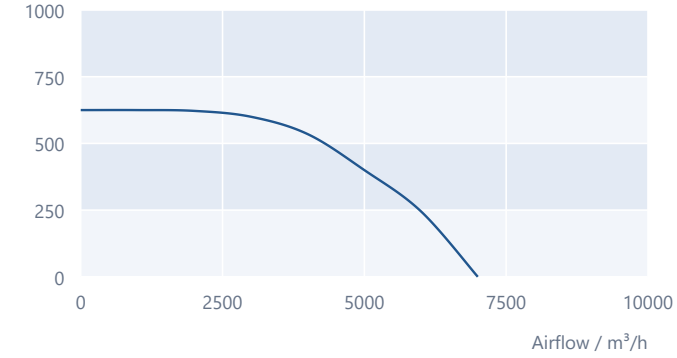

Model-specific axis scales. Listed 50 Hz curves shown only within their ranges. Maximum airflow and pressure are separate endpoints.

03 / DIMENSIONAL DATA

Plan the installation.

FAMILY DRAWING

All dimensions in mm

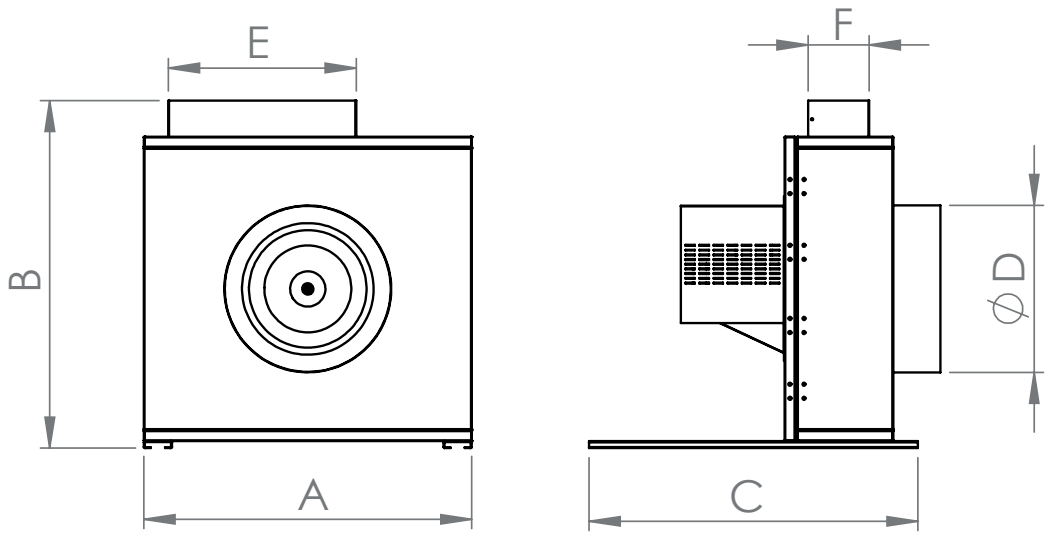

Model	A	B	C	Ø D	E	F
VKEF 315	650	690	700	315	300	110
VKEF 355	700	740	700	355	400	130
VKEF 400	750	790	700	400	400	150
VKEF 450	800	840	700	450	400	170
VKEF 500	850	890	700	500	440	190

VKEF series / nominal duct connections 315-500 mm

Family drawing. Dimension values follow the model records in Voltvent Selection Software.

04 / INSTALLATION & MOTOR DATA

Plan for access and service.

01 Duct connection

Match the circular D connection to the selected model. Use dimensions A-F to plan the casing envelope and mounting space.

02 Installation & access

Support the cabinet securely. Allow clearance for the inspection hatch and motor service compartment. Keep access clear for cleaning and maintenance.

03 Applications

Kitchen hood exhaust and duct ventilation applications. Keep the airflow path clear and respect the stated operating temperature range.

MOTOR & OPERATING CONDITIONS

Parameter	Catalogue reference
Electrical supply	3~380 V / 50 Hz
Insulation / protection	Class F / IP55
Motor efficiency class	IE3
Duty classification	S1
Operating temperature	-20 to +50 °C

Use the electrical connection diagram supplied with the actual unit. A model-specific wiring diagram is not available in The available data records. Disconnect the supply before servicing.

VKEF

Kitchen exhaust fans

VOLTVENT®
VENTILATION SYSTEMS

info@voltvent.com | voltvent.com