VRF-EC SERIES

# Vertical discharge EC roof fans

# VRF-EC

ec MOTOR

VERTICAL AIR DISCHARGE

INTEGRATED EC CONTROL

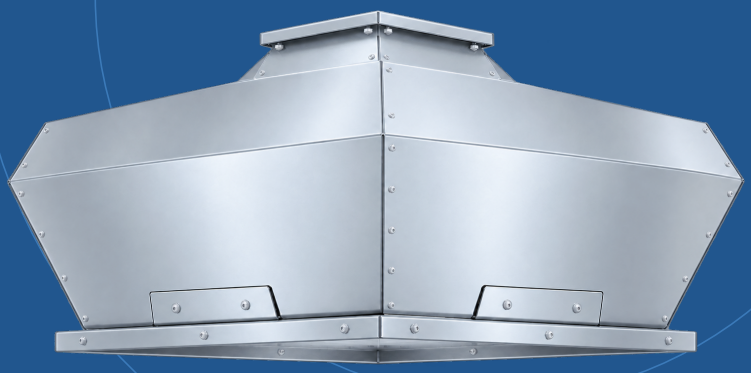

| 4500-24000 | 06 | 50 / 60 Hz |
|---|---|---|
| Maximum airflow / $m^3/h$ | Frequency configurations | Declared mains frequency |

info@voltvent.com | voltvent.com

01 / PRODUCT OVERVIEW

# Upward exhaust. EC control.

Vertical discharge
EC roof fan



### 01 Vertical roof discharge

A centrifugal EC roof fan arranged for upward exhaust. Keep the air path above the unit clear of overhead obstructions.

### 02 Integrated EC control

Integrated EC electronics provide speed regulation. Performance curves correspond to the published 10 V setting for the stated frequency record.

### 03 Coordinate roof and service access

Use the base dimensions to coordinate the support and duct opening. Keep the discharge and electrical connection accessible for inspection and cleaning.

## KEEP THE UPWARD AIR PATH CLEAR

For building extract-air systems with vertical roof discharge. Provide safe service access around the fan without obstructing the outlet.

## SERIES AT A GLANCE

| Selection parameter | Series reference |
|---|---|
| **Mains supply** | 400 V / 3 phase |
| **Frequency records** | 50 Hz / 60 Hz, as listed |
| **EC performance setting** | 10 V |
| **Motor / insulation / temperature** | IP55 / class F / maximum 55 °C |

A verified EC wiring diagram and terminal assignments are unavailable. Use the electrical documentation supplied with the ordered configuration.

02 / TECHNICAL DATA

# Select the frequency record.

### 400 V / 3 PHASE / 10 V PERFORMANCE SETTING

| Model / frequency | Max. airflow $m^3/h$ | Rated input W | Rated speed rpm | Max. static Pa | Mass kg |
|---|---|---|---|---|---|
| **VRF-EC 450T / 50 Hz** | 4500 | 450 | 940 | 260 | 50 |
| **VRF-EC 500T / 50 Hz** | 7000 | 750 | 930 | 410 | 55 |
| **VRF-EC 500T / 60 Hz** | 7000 | 750 | 930 | 410 | 60 |
| **VRF-EC 560T / 50 Hz** | 10500 | 1050 | 1000 | 540 | 60 |
| **VRF-EC 560T / 60 Hz** | 10500 | 1050 | 1000 | 540 | 60 |
| **VRF-EC 630T / 50 Hz** | 24000 | 6600 | 1500 | 1400 | 60 |

VRF-EC 500T: declared mass is 55 kg at 50 Hz and 60 kg at 60 Hz. VRF-EC 630T: declared maximum static pressure is 1400 Pa; the supplied pressure curve peaks at approximately 1553 Pa. Both original records are retained. Maximum airflow, pressure and rated motor values are separate references.

### CONTROL SETTING & UNAVAILABLE DATA

| Parameter | Available value |
|---|---|
| **Performance input setting** | 10 V |
| **Rated current** | Not supplied |
| **Sound pressure / measurement distance** | Not supplied |

A current curve does not establish a missing rated-current value. No rated current or sound-pressure level is inferred. Use the frequency-specific nameplate and supplied electrical documentation when specifying the ordered fan.

03 / AIR PERFORMANCE

# Fan Performance Curves

## VRF-EC 450T / 50 Hz

400 V / 3 phase / 50 Hz / 10 V setting

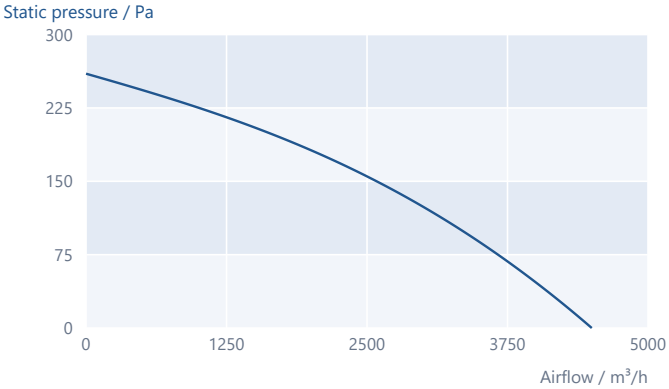


## VRF-EC 500T / 50 Hz

400 V / 3 phase / 50 Hz / 10 V setting

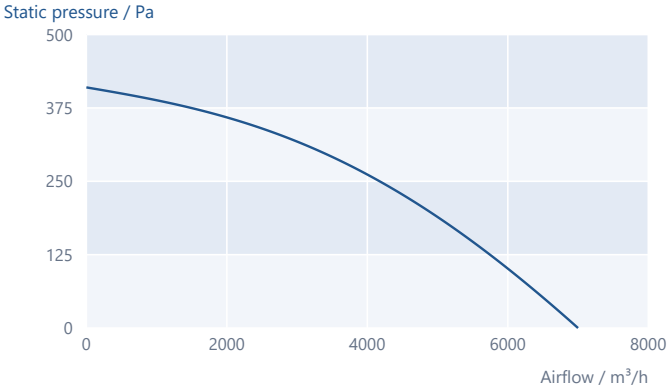


## VRF-EC 500T / 60 Hz

400 V / 3 phase / 60 Hz / 10 V setting

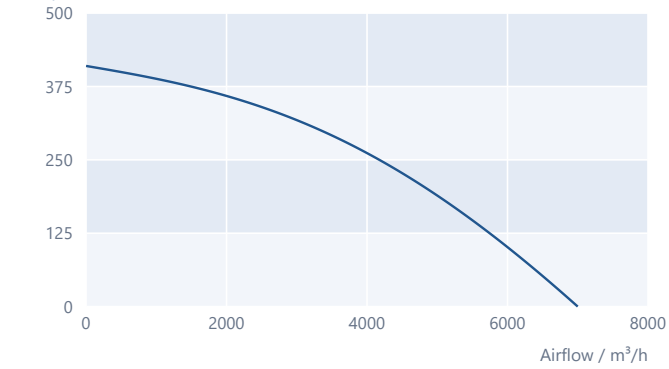


## VRF-EC 560T / 50 Hz

400 V / 3 phase / 50 Hz / 10 V setting

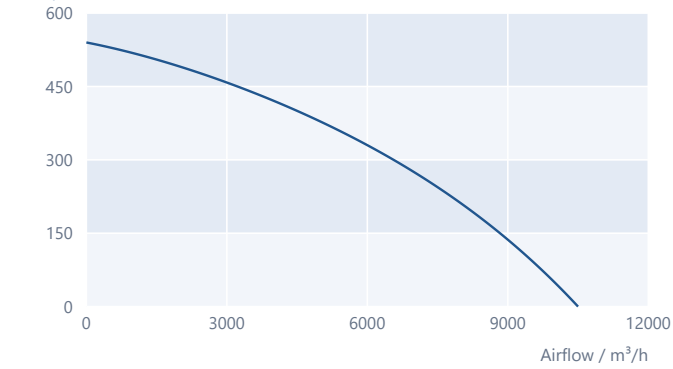


## VRF-EC 560T / 60 Hz

400 V / 3 phase / 60 Hz / 10 V setting

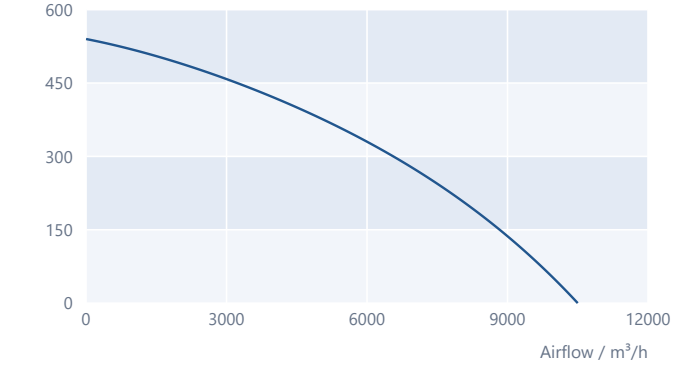


## VRF-EC 630T / 50 Hz

400 V / 3 phase / 50 Hz / 10 V setting

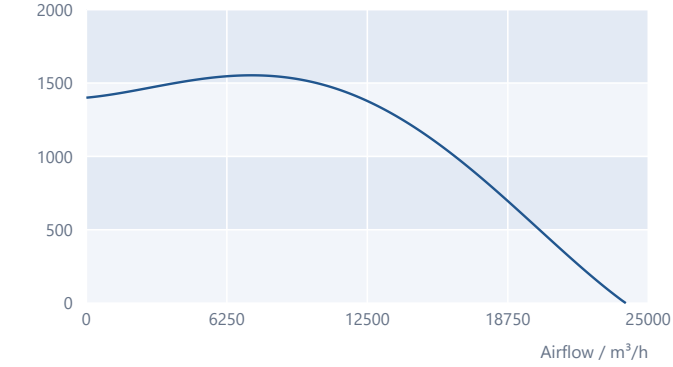


VRF-EC 630T: declared maximum static pressure 1400 Pa; supplied curve peak approximately 1553 Pa.

Original 10 V records and airflow limits are retained. The 50/60 Hz pairs share the same supplied performance data; no frequency conversion or curve re-fitting is applied. Model-specific scales.

04 / DIMENSIONS

# Plan the roof connection.

## REPRESENTATIVE SERIES OUTLINE

All dimensions in mm

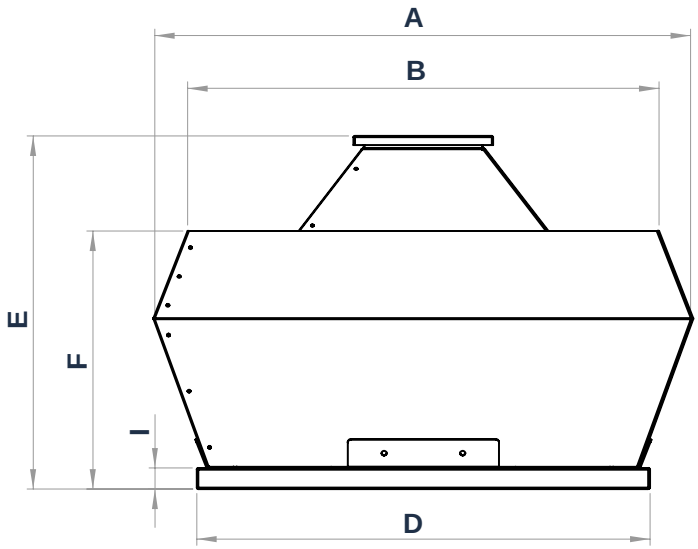


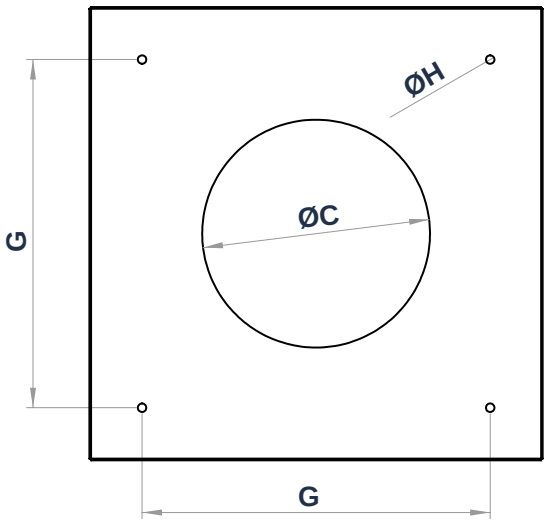


| Model / frequency | A | B | ØC | D | E | F | G | ØH | I |
|---|---|---|---|---|---|---|---|---|---|
| **VRF-EC 450T / 50 Hz** | 960 | 855 | 380 | 800 | 595 | 440 | 625 | 14 | 35 |
| **VRF-EC 500T / 50 Hz** | 1030 | 915 | 450 | 850 | 695 | 490 | 675 | 14 | 35 |
| **VRF-EC 500T / 60 Hz** | 1030 | 915 | 450 | 850 | 695 | 490 | 675 | 14 | 35 |
| **VRF-EC 560T / 50 Hz** | 1195 | 960 | 500 | 950 | 820 | 610 | 740 | 14 | 35 |
| **VRF-EC 560T / 60 Hz** | 1195 | 960 | 500 | 950 | 820 | 610 | 740 | 14 | 35 |
| **VRF-EC 630T / 50 Hz** | 1400 | 1100 | 680 | 1110 | 980 | 740 | 900 | 14 | 40 |

Use the row for the selected model and frequency. The original outline uses generic dimensions and is not drawn to scale. Coordinate the support, roof opening and duct connection.

05 / ACOUSTICS & SERVICE

# Sound references. Service access.

## SHARED OCTAVE-BAND SOUND POWER REFERENCE / dB(A)

| Path | 65 Hz | 125 Hz | 250 Hz | 500 Hz | 1 kHz | 2 kHz | 4 kHz | 8 kHz | Total |
|---|---|---|---|---|---|---|---|---|---|
| **Inlet** | 60 | 66 | 66 | 67 | 66 | 65 | 61 | 55 | 74 |
| **Outlet** | 61 | 66 | 66 | 67 | 66 | 65 | 61 | 55 | 74 |
| **Housing** | 58 | 65 | 64 | 62 | 60 | 56 | 52 | 50 | 70 |

All six configurations carry the same supplied three-path sound-power reference, presented once here. Band labels and totals are retained, including the first band at 65 Hz. Totals are not arithmetic sums.

Model-specific sound pressure and measurement distance are not supplied. This common reference is not an installation-specific or selected-duty acoustic prediction.

## KEEP THE DISCHARGE CLEAR

Maintain an unobstructed upward air path above the fan. Coordinate nearby roof structures with the discharge arrangement.

## COORDINATE THE ROOF SUPPORT

Match the support and duct opening to the dimensions. Keep the fan and connecting ductwork securely supported.

## ALLOW INSPECTION ACCESS

Leave access around the fan and electrical connection for inspection and cleaning. Follow the electrical documentation supplied with the ordered unit.

# VRF-EC

ec MOTOR

## Vertical discharge
## EC roof fans

VOLTVENT®
VENTILATION SYSTEMS

info@voltvent.com | voltvent.com