VOLTVENT®
VENTILATION SYSTEMS

VBD SERIES

Double inlet belt driven centrifugal fans

VBD

BACKWARD-CURVED IMPELLER

GALVANIZED STEEL HOUSING



8000-95000	10	50 Hz
Catalogue airflow / m^3/h	Fan sizes in the range	Separate motor selection

info@voltvent.com | voltvent.com

01 / PRODUCT OVERVIEW

Backward-curved. Built for pressure.

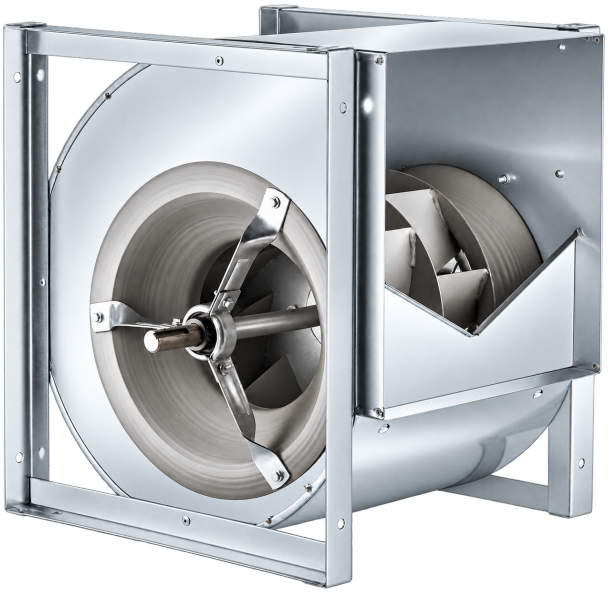

01 Double-inlet centrifugal design

Backward-curved welded-steel impeller in a corrosion-resistant galvanized-steel scroll housing, for ventilation box assemblies and air-handling units.

02 A drive selected for the duty

The motor is supplied separately. Fan speed follows the chosen belt and pulley ratio; motor speed and fan speed remain distinct.

03 Clearance for both inlets

Provide access to the shaft, bearings and transmission. The outline drawing shows the mounting frame; confirm the supplied assembly configuration.

AIRFLOW, PRESSURE & DRIVE

Choose the fan around the operating point.

Match airflow and static pressure, select the required fan speed within the permitted range, and size the motor from absorbed shaft power plus the allowance. Use the selected fan dimensions and actual drive assembly for installation.

Selection parameter	Series overview
Catalogue airflow	8000-95000 m^3/h; separate from reference-curve limits
Permitted fan speeds	400-3200 rpm across the range; model-specific limits
Motor power limits	0.37-75.00 kW across the range; duty-selected
Recommended motor configuration	400 V / 3 phase / 50 Hz / Class F / IP55 / TEFC / IE2
Motor operating range	-20 to +60 °C
Maximum transported-air temperature	+60 °C

Performance data. Reference curves and calculated speed variants are distinguished.

02 / TECHNICAL DATA

Select the fan and the drive.

BARE FAN / RATINGS / 50 Hz

Model	Catalogue airflow / m³/h	Reference curve airflow / m³/h	Reference fan rpm	Permitted fan speed / rpm	Motor limits kW	Bare fan kg
VBD 280	8000	1129-6038	2412	1600-3200	0.37-3.00	22
VBD 315	11000	2345-8030	2208	1400-3000	0.55-4.00	33
VBD 355	13500	2897-9842	1903	1200-2600	0.55-5.50	45
VBD 400	16000	3085-11309	1702	1000-2400	0.75-7.50	52
VBD 450	19900	4101-13912	1548	1000-2200	1.10-15.00	68
VBD 500	27700	5581-19950	1445	900-2000	1.10-22.00	85
VBD 560	35000	7535-25005	1296	800-1800	1.10-30.00	140
VBD 630	51000	10016-36160	1202	700-1700	1.50-45.00	180
VBD 710	85000	10000-50000	1202	400-2200	5.50-75.00	250
VBD 800	95000	15000-57000	1000	500-1600	7.50-55.00	300

Catalogue airflow is the nominal figure. Reference-curve airflow applies at the stated fan rpm; it is not selected duty airflow or a zero-pressure rating. No fixed motor power, motor current or acoustic rating is supplied for the bare fan.

VBD 630: current FSP bare-fan weight is 180 kg; the separate dimension record lists 170 kg. Current FSP is retained. Confirm the supplied assembly weight for support design.

MOTOR POLES & POWER ALLOWANCE

Fan sizes	Motor poles	Additional shaft-power allowance
280 / 315 / 355 / 400	2 poles	10%
450 / 500 / 560 / 630 / 710	4 poles	10%
800	4 poles	5%

03 / AIR PERFORMANCE / 1 OF 2

Fan Performance Curves

VBD 280

Fan speed 1600-3200 rpm / 50 Hz motor supply

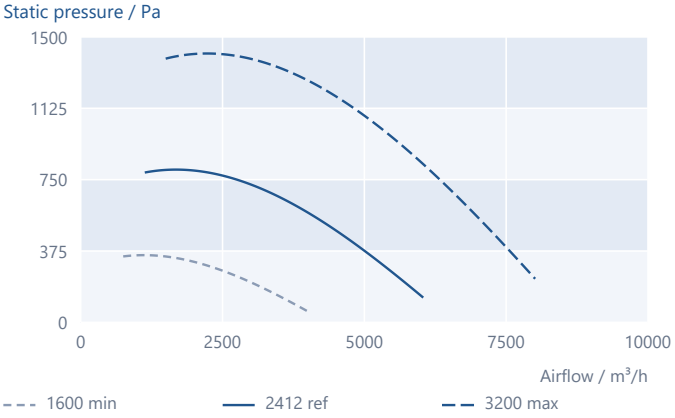

VBD 315

Fan speed 1400-3000 rpm / 50 Hz motor supply

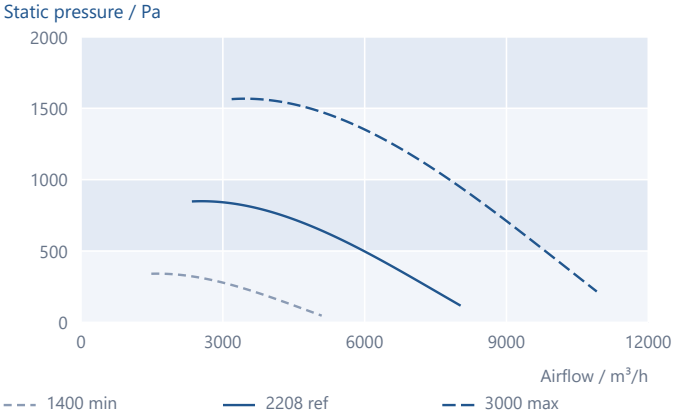

VBD 355

Fan speed 1200-2600 rpm / 50 Hz motor supply

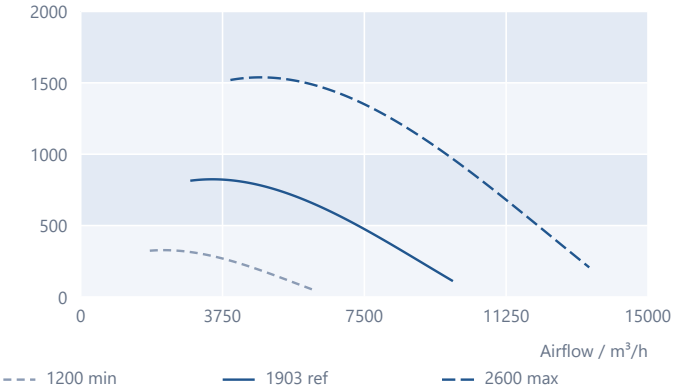

VBD 400

Fan speed 1000-2400 rpm / 50 Hz motor supply

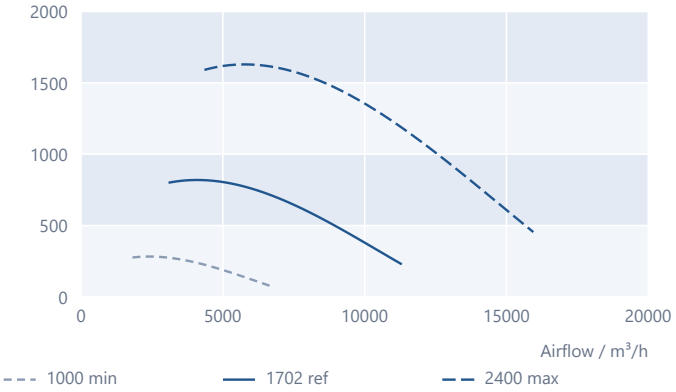

VBD 450

Fan speed 1000-2200 rpm / 50 Hz motor supply

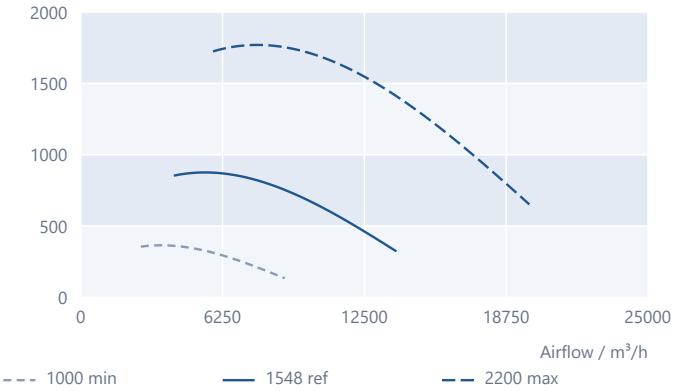

VBD 500

Fan speed 900-2000 rpm / 50 Hz motor supply

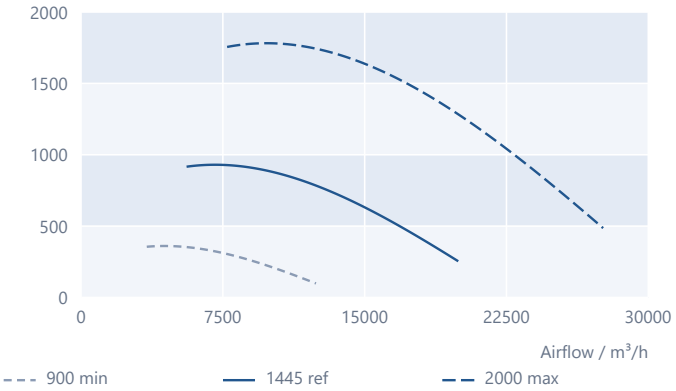

Model-specific scales; legends use fan rpm. No curve extrapolation beyond the supplied domain. Square endpoints mark the motor-power limit including allowance. Select the final motor and pulley ratio at the required duty in FSP.

03 / AIR PERFORMANCE / 2 OF 2

Fan Performance Curves

VBD 560

Fan speed 800-1800 rpm / 50 Hz motor supply

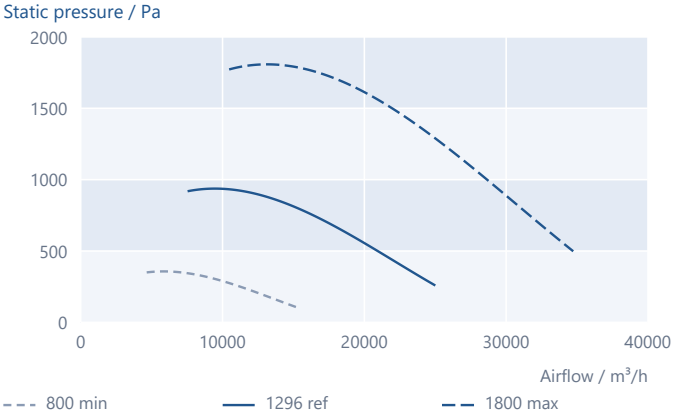

VBD 630

Fan speed 700-1700 rpm / 50 Hz motor supply

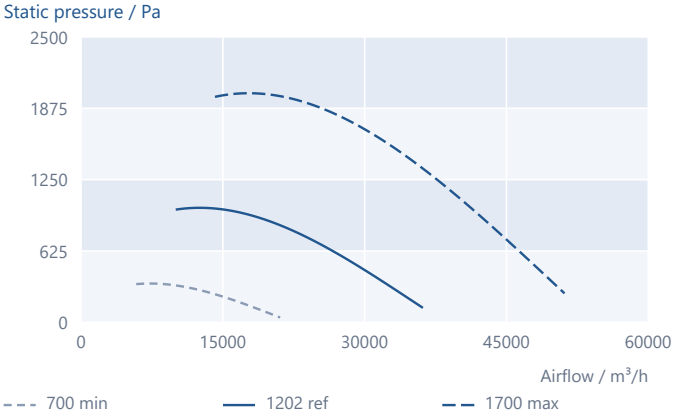

VBD 710

Fan speed 400-2200 rpm / 50 Hz motor supply

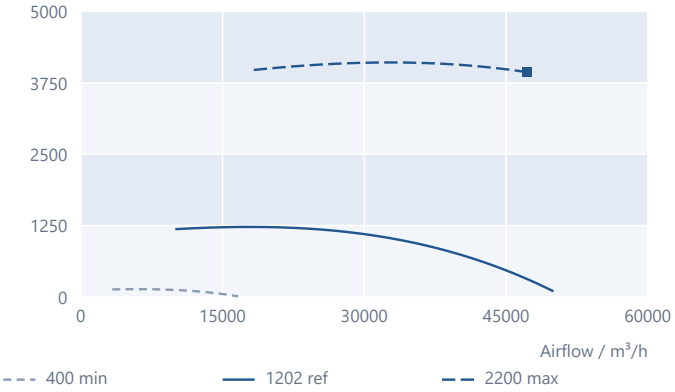

VBD 800

Fan speed 500-1600 rpm / 50 Hz motor supply

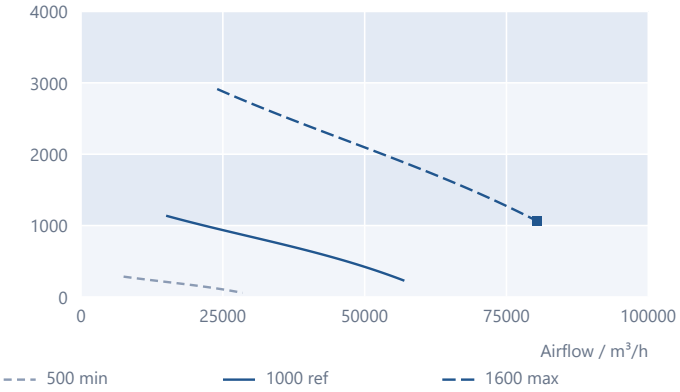

READING THE SPEED CURVES

Select the motor at the working point.

Solid lines are selection data speeds; dashed min / max lines are calculated by fan affinity laws. Motor selection includes the supplied 10% shaft-power allowance for sizes 280-710 and 5% for size 800, within the listed motor limits.

$$Q_2 = Q_1 \times (n_2 / n_1)$$

$$p_2 = p_1 \times (n_2 / n_1)^2$$

$$P_2 = P_1 \times (n_2 / n_1)^3$$

Model-specific scales; legends use fan rpm. No curve extrapolation beyond the supplied domain. Square endpoints mark the motor-power limit including allowance. Select the final motor and pulley ratio at the required duty in FSP.

04 / DIMENSIONAL DRAWING

Define the mounting and shaft.

FRAME, SCROLL & SHAFT DETAILS

All dimensions in mm

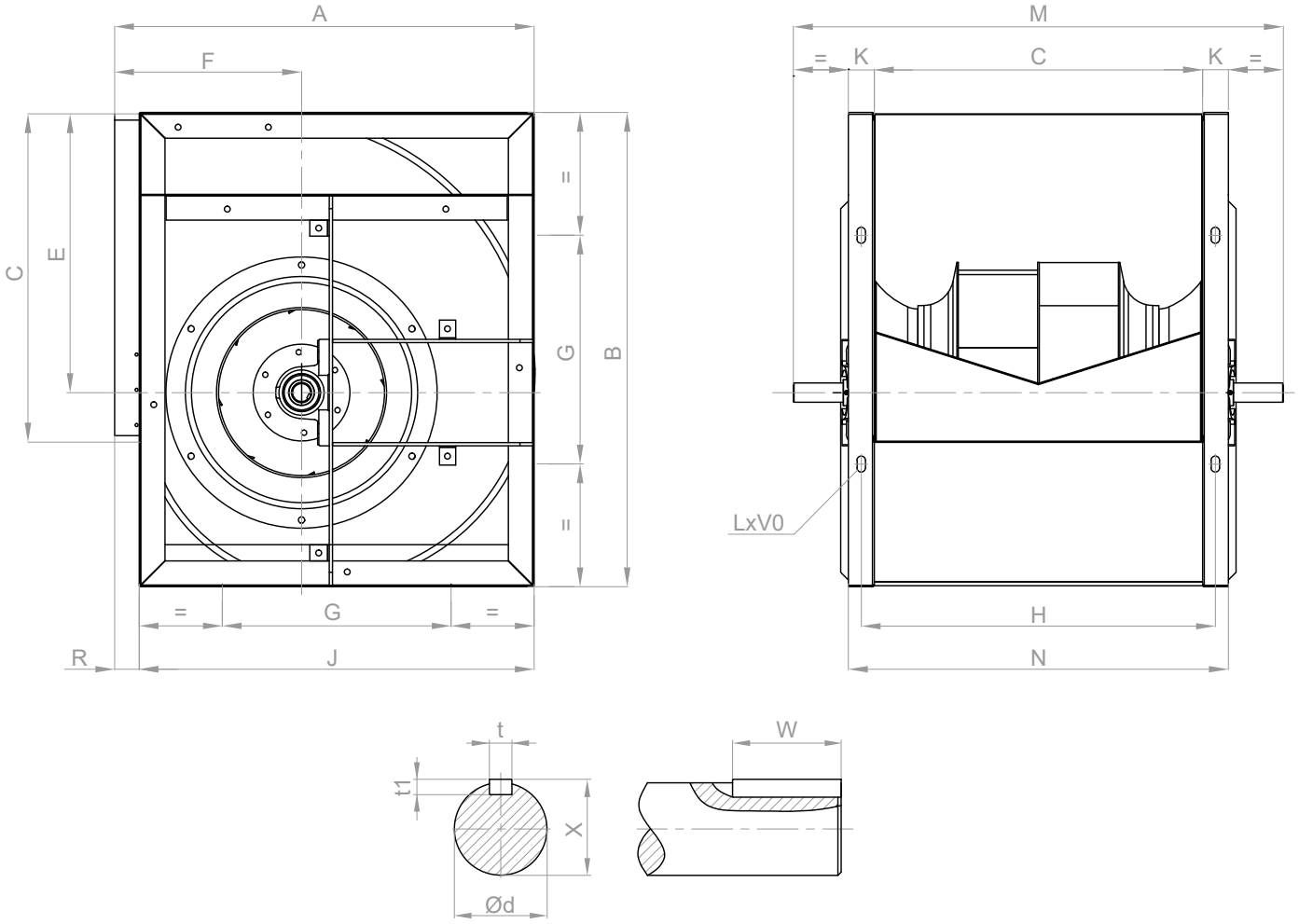

MODEL-SPECIFIC DIMENSIONS

Use the selected fan size and assembly.

The drawing shows the mounting-frame and shaft geometry for this family. The table on page 7 gives all 18 supplied dimensions for every model; nominal discharge profiles are listed separately on page 8.

The product photograph illustrates the framed fan assembly. Use the selected model dimensions and actual flange for mating parts. Do not scale the drawing to obtain dimensions.

05 / DIMENSIONAL DATA

Every mounting dimension, by size.

HOUSING, SHAFT DIAMETER & FRAME / mm

Model	A	B	C	d	E	F	G	H	J
VBD 280	466	518	361	25	302	215	280	391	432
VBD 315	518	578	404	25	340	263	330	430	484
VBD 355	578	655	453	30	384	261	355	490	548
VBD 400	651	736	507	30	432	290	355	549	613
VBD 450	727	832	569	35	487	322	530	611	681
VBD 500	806	920	640	35	544	352	610	695	754
VBD 560	894	1031	718	40	609	390	685	777	842
VBD 630	996	1157	801	40	685	434	766	866	946
VBD 710	1096	1157	1000	50	685	484	866	1066	1046
VBD 800	1280	1500	1005	50	870	540	800	1160	1200

SLOTS, MOUNTING & KEYWAY / mm

Model	K	LxV0	M	N	R	t	t1	W	X
VBD 280	30	13x18	540	420	34	8	7	40	28
VBD 315	30	13x18	600	460	34	8	7	40	28
VBD 355	32	13x18	700	520	34	8	7	40	33
VBD 400	40	13x18	760	589	38	8	7	40	33
VBD 450	40	13x18	845	613	46	10	8	50	38
VBD 500	45	13x18	924	736	52	10	8	50	38
VBD 560	50	13x18	1000	819	52	12	8	70	43
VBD 630	50	13x18	1092	907	52	12	8	70	43
VBD 710	50	13x18	1292	1100	52	14	9	90	43
VBD 800	50	13x18	1350	1200	50	14	9	90	53.5

All dimensions in mm. d denotes shaft diameter; t, t1 and X identify the keyway section. The slot dimension LxV0 is retained as labelled in the drawing. Use the original outline and selected model values.

06 / DRIVE & INSTALLATION

Complete the fan assembly.

01 Select the motor and transmission

Specify airflow and static pressure; select fan speed within the listed limits. Size the motor from absorbed shaft power plus the model-specific allowance (10%, or 5% for VBD 800), using a supplied motor option. Match the pulley ratio to fan rpm; motor poles do not identify fan rpm.

02 Mount, guard and maintain

Provide a rigid mounting assembly, access to both inlets and bearing/belt service clearance. Follow the rotation marking and guard the inlets and transmission for the installation. Isolate power before maintenance; inspect bearing condition, belt tension and pulley alignment. Maximum transported air: +60 °C.

NOMINAL DISCHARGE PROFILES / MOTOR POLES

Model	Nominal discharge profile / mm	Motor poles
VBD 280	361 x 361	2 poles
VBD 315	405 x 405	2 poles
VBD 355	455 x 455	2 poles
VBD 400	510 x 510	2 poles
VBD 450	570 x 570	4 poles
VBD 500	640 x 640	4 poles
VBD 560	715 x 715	4 poles
VBD 630	843 x 843	4 poles
VBD 710	1043 x 843	4 poles
VBD 800	900 x 900	4 poles

Nominal profiles are connection references and can differ from drawing dimension C. Use the original outline, selected dimensions and actual flange for mating connections. Motor operating range: -20 to +60 °C; motor supplied separately.

07 / ELECTRICAL CONNECTION

Connect the selected motor.

THREE PHASE / LAYOUT 19 / 50 Hz

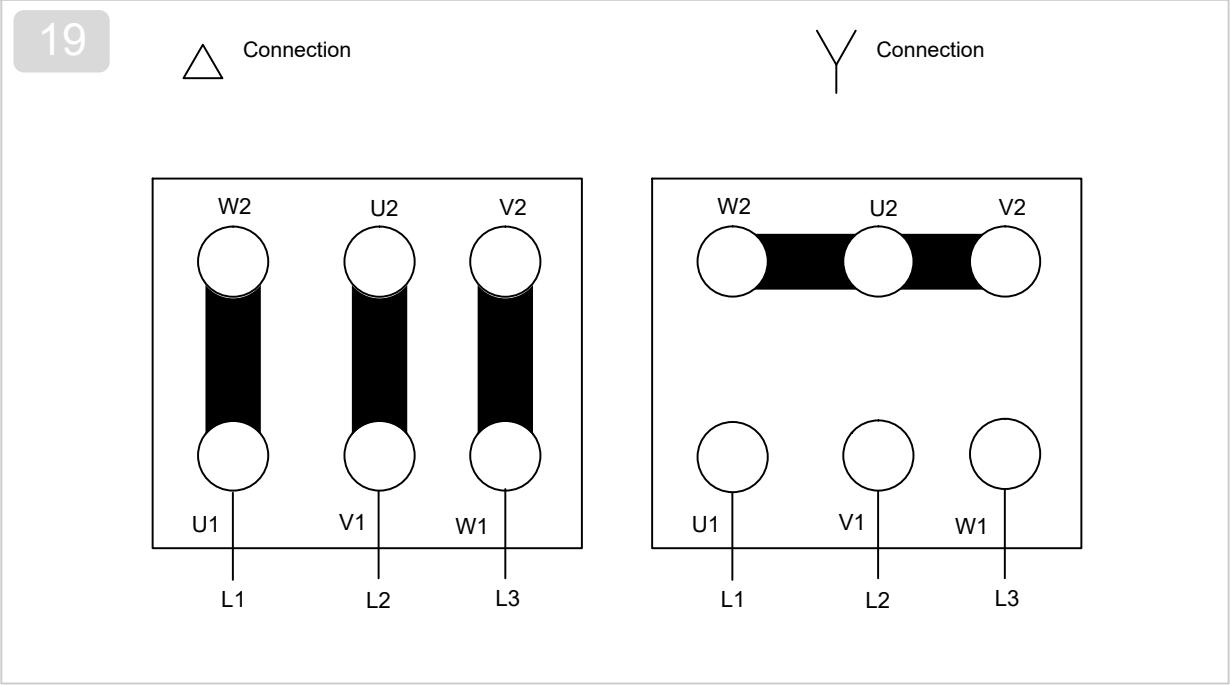

Delta connection

Star connection

The motor nameplate sets the connection.

The diagram shows delta and star terminal arrangements for the recommended three-phase motor configuration. Rated supply is 400 V, 50 Hz. The bare VBD fan is supplied without a motor; specify the correct motor voltage rating and terminal arrangement for the selected drive.

Use the selected motor nameplate and supplied diagram; connect protective earth and verify rotation during commissioning. This is a terminal reference, not a complete control-panel or protective-device design.

Motor configuration: Class F / IP55 / TEFC / IE2. No unavailable motor current, electrical losses or application-specific control wiring is inferred. Supplied curve metadata and final motor configuration remain distinct.

VBD

Double inlet belt driven centrifugal fans

VOLTVENT®
VENTILATION SYSTEMS

info@voltvent.com | voltvent.com