VPAF SERIES

Portable axial flow fans

VPAF

ALUMINIUM AXIAL IMPELLER

MOBILE WHEELED FRAME



560-800
Fan diameter / mm

04
Models in the range

50 Hz
Three-phase AC

01 / PRODUCT OVERVIEW

Air movement where you need it.



01 Mobile wheeled frame

The wheeled frame allows the unit to move between working locations. Position it on a stable surface and secure it before operation.

02 Adjustable discharge direction

The adjustment handwheel changes the direction of discharge. Leave clearance around the fan and its adjustment movement.

03 Axial airflow and controls

A five-blade aluminium impeller operates inside a powder-coated galvanized sheet-metal casing. On/off and emergency-stop controls are standard.

SELECTION & PERFORMANCE

Select the portable fan size.

Four five-blade configurations cover 560, 630, 710 and 800 mm diameters. Select the model using its individual pressure curve and listed airflow. Motor power and speed are catalogue reference ratings at 0 Pa; actual electrical input depends on the operating duty.

Selection parameter	Catalogue basis
Fan diameter range	560-800 mm / 4 diameters
Reference motor power	0.75-2.20 kW
Electrical supply	380 V / 3 phase / 50 Hz / 4 poles
Motor insulation / protection	Class F / IP55 / IE3
Motor working temperature / duty	-20 to +50 °C / S1

Performance data. The approved product photo is illustrative; material descriptions follow FSP records.

02 / TECHNICAL DATA

Compare the configurations.

4 MODELS / 50 Hz / THREE PHASE

Model / diameter-blades-angle	Blades / angle deg.	Motor kW	Airflow m³/h	Speed rpm	Supply V / phase
VPAF 560/5-25	5 / 25	0.75	8150	1466	380 / 3
VPAF 630/5-30	5 / 30	1.10	13480	1465	380 / 3
VPAF 710/5-30	5 / 30	1.50	19210	1472	380 / 3
VPAF 800/5-30	5 / 30	2.20	25560	1459	380 / 3

All models: 4 poles, 50 Hz, Class F insulation, IP55 protection and IE3 motors. Motor working range: -20 to +50 °C. Airflow and motor ratings are catalogue references at 0 Pa; airflow is not a selected duty point.

READING THE MODEL CODE

Example: VPAF 560/5-25/0.75kW/4P identifies a 560 mm fan, five blades, a 25-degree blade angle, a 0.75 kW motor and four poles. The table abbreviates the model code; its motor rating appears in a separate column.

Motor current and weight were not supplied. Unclassified noise totals are omitted because their sound power/pressure basis and measurement distance are unavailable.

03 / AIR PERFORMANCE / 01

Fan Performance Curves

VPAF 560/5-25

0.75 kW / 4P / 380 V / reference 1466 rpm

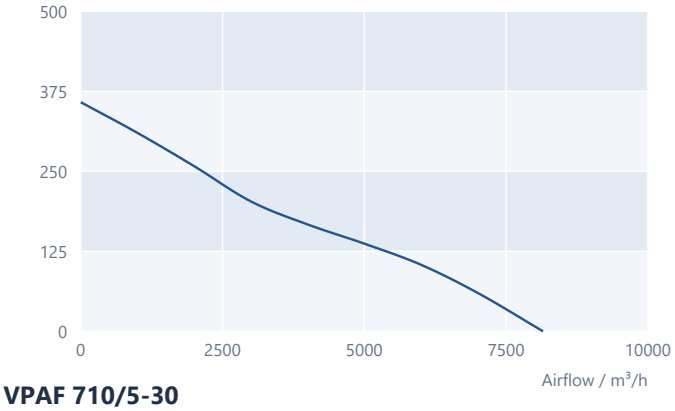

VPAF 630/5-30

1.10 kW / 4P / 380 V / reference 1465 rpm

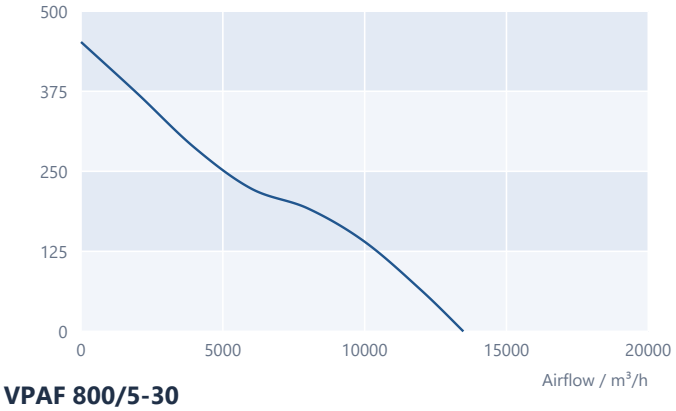

VPAF 710/5-30

1.50 kW / 4P / 380 V / reference 1472 rpm

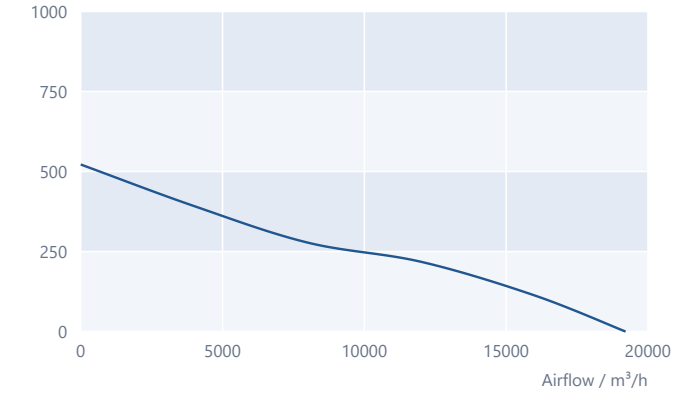

VPAF 800/5-30

2.20 kW / 4P / 380 V / reference 1459 rpm

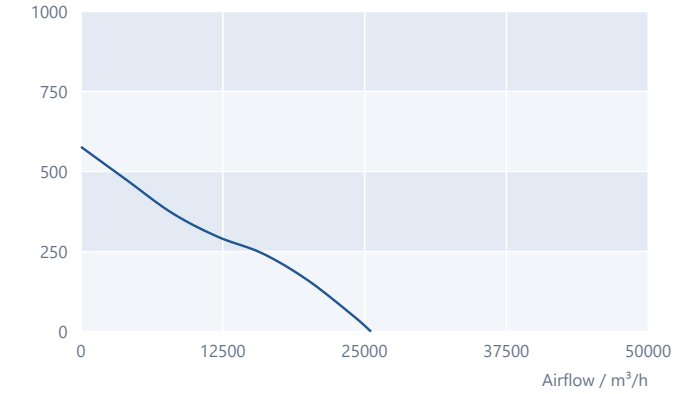

Model-specific scales. Listed catalogue pressure curves follow the original sampled vector paths within the supplied airflow domain. Reference motor ratings are at 0 Pa; no extrapolation.

04 / DIMENSIONAL DATA

Allow room for movement.

SERIES DRAWING / 560-800

All dimensions in mm

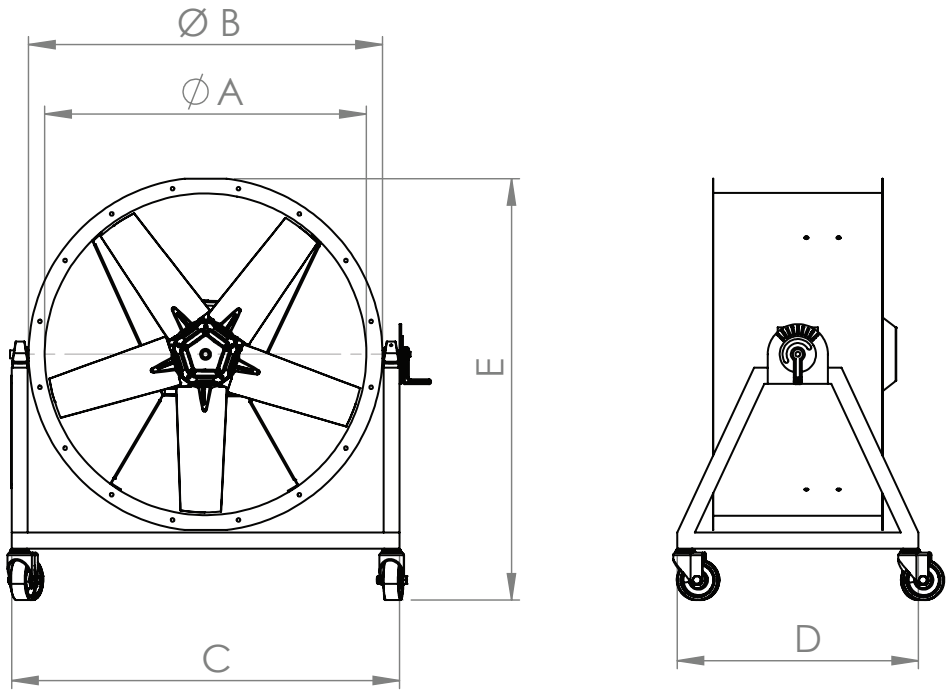

Model size	A	B	C	D	E
VPAF 560	560	640	760	500	860
VPAF 630	630	710	830	600	930
VPAF 710	710	790	910	600	1010
VPAF 800	800	880	1000	600	1100

Product vector drawing and model-specific A-E dimensions. Allow clearance for the casing, wheeled frame, control cabinet and adjustment movement. Position the unit on a stable surface.

05 / INSTALLATION & MOTOR

Prepare the installation.

01 Positioning and adjustment

Position the wheeled frame on a stable surface and secure it before use. Adjust the discharge direction using the handwheel and keep the inlet and outlet clear.

02 Motor configuration

The supplied records specify 380 V, three phase, 50 Hz and four poles. Motor insulation is Class F, protection is IP55 and efficiency class is IE3. Continuous duty is S1.

03 Connection information

A model-specific electrical connection diagram was not supplied. Use the actual motor nameplate and the connection diagram supplied with the unit to determine its terminal connections.

04 Controls, guards and maintenance

On/off and emergency-stop controls and a protection grille are listed as standard. Ensure guards are fitted before operation. Isolate power before moving, adjusting or servicing the fan.

OPERATING CONDITIONS & GUARDING

Use the operating range of -20 to +50 °C. The motor is in the airstream. The approved product photograph shows the impeller for identification; operate the unit with the required protective guards fitted.

VPAF

Portable
axial flow fans



info@voltvent.com | voltvent.com