VLF-TNL-JF SERIES

Tunnel jet fans

VLF-TNL-JF

F300/F400°C 2h

UNIDIRECTIONAL AIRFLOW

DUAL TUBULAR SILENCERS



14550-123700	76-1101	10 / 20	F300 / F400
Nominal airflow / m^3/h	Nominal thrust / N	Models / electrical variants	Configuration options

01 / PRODUCT OVERVIEW

Impulse ventilation for tunnels.



01 Steel casing. Aluminium impeller.

Heavy-gauge tubular steel casing with a cast-aluminium, unidirectional impeller and aerodynamic inlet and discharge.

02 Silencers and mounting assembly

Tubular silencers at both ends. Mounting supports, vibration isolation and safety anchoring form part of the installation assembly.

03 Three-phase motor

50 Hz IE3 motor with class H insulation and IP55 protection. Select the model-specific supply and maximum admissible current.

SELECT BY AIRFLOW AND THRUST

Ten base models. Two electrical choices per model. Nominal performance is shared by the two voltage variants.

SERIES AT A GLANCE

Selection parameter	Series reference
Nominal impeller diameter	560-1250 mm
Nominal thrust	76-1101 N
Installed motor power	1.5-37 kW
Motor / supply reference	IE3 / 3 phase / 50 Hz
Protection / insulation	IP55 / class H
Continuous air temperature	-25 to +40 °C

F300 / F400 configurations are listed together. Confirm the supplied fan marking and model-specific documentation. Warm-climate operation up to +50 °C requires confirmation.

02 / TECHNICAL DATA

Select the airflow and thrust.

10 BASE MODELS / NOMINAL PERFORMANCE / 50 Hz

Model	Motor kW	Speed rpm	Airflow m^3/h	Thrust N	Velocity m/s	Mass* kg	LpA dB(A)
VLF-TNL-JF-560-2P-9.2kW	9.2	2975	29500	312	37.6	273	64
VLF-TNL-JF-560-4P-1.5kW	1.5	1435	14550	76	16.4	197	50
VLF-TNL-JF-630-2P-15kW	15	2935	40050	455	37.1	323	68
VLF-TNL-JF-630-4P-2.2kW	2.2	1450	21550	132	19.2	241	53
VLF-TNL-JF-710-4P-3kW	3	1455	28550	182	20	279	65
VLF-TNL-JF-800-4P-4kW	4	1445	36900	239	20.4	414	63
VLF-TNL-JF-900-4P-7.5kW	7.5	1460	52000	375	22.7	495	65
VLF-TNL-JF-1000-4P-11kW	11	1460	66500	497	23.5	667	63
VLF-TNL-JF-1250-4P-22kW	22	1475	98100	692	22.2	980	59
VLF-TNL-JF-1250-4P-37kW	37	1480	123700	1101	28	1110	62

* Approximate complete-unit mass. Sound pressure LpA is specified at 10 m and at maximum airflow. Octave-band sound power is listed separately on page 7.

PERFORMANCE BASIS

Nominal operating data.

Values are supplied nominal references. Installed motor power and maximum admissible current are separate electrical ratings. Model-specific pressure, absorbed-power and efficiency curves are not supplied.

03 / ELECTRICAL VARIANTS

Match the model and supply.

20 THREE-PHASE CONFIGURATIONS / 50 Hz

Model	Supply V	Max. admissible current / A	Phases
VLF-TNL-JF-560-2P-9.2kW	400	18.07	3
VLF-TNL-JF-560-2P-9.2kW	690	10.44	3
VLF-TNL-JF-560-4P-1.5kW	230	5.89	3
VLF-TNL-JF-560-4P-1.5kW	400	3.38	3
VLF-TNL-JF-630-2P-15kW	400	26.50	3
VLF-TNL-JF-630-2P-15kW	690	15.35	3
VLF-TNL-JF-630-4P-2.2kW	230	7.86	3
VLF-TNL-JF-630-4P-2.2kW	400	4.52	3
VLF-TNL-JF-710-4P-3kW	230	11.01	3
VLF-TNL-JF-710-4P-3kW	400	6.33	3
VLF-TNL-JF-800-4P-4kW	400	7.95	3
VLF-TNL-JF-800-4P-4kW	690	4.61	3
VLF-TNL-JF-900-4P-7.5kW	400	14.20	3
VLF-TNL-JF-900-4P-7.5kW	690	8.17	3
VLF-TNL-JF-1000-4P-11kW	400	20.70	3
VLF-TNL-JF-1000-4P-11kW	690	11.99	3
VLF-TNL-JF-1250-4P-22kW	400	42.20	3
VLF-TNL-JF-1250-4P-22kW	690	24.44	3
VLF-TNL-JF-1250-4P-37kW	400	66.80	3
VLF-TNL-JF-1250-4P-37kW	690	38.70	3

Use the listed voltage/current pair for the selected model. Three models have 230 / 400 V options; the remaining models have 400 / 690 V options. All supplies are three-phase.

An electrical terminal diagram is not supplied. Confirm the unit nameplate and supplied connection instructions; no star/delta terminal arrangement is inferred.

04 / NOMINAL PERFORMANCE

Nominal airflow and thrust.

10 SUPPLIED OPERATING POINTS / 50 Hz



01 **VLF-TNL-JF-560-2P-9.2kW**
29500 m³/h / 312 N

02 **VLF-TNL-JF-560-4P-1.5kW**
14550 m³/h / 76 N

03 **VLF-TNL-JF-630-2P-15kW**
40050 m³/h / 455 N

04 **VLF-TNL-JF-630-4P-2.2kW**
21550 m³/h / 132 N

05 **VLF-TNL-JF-710-4P-3kW**
28550 m³/h / 182 N

06 **VLF-TNL-JF-800-4P-4kW**
36900 m³/h / 239 N

07 **VLF-TNL-JF-900-4P-7.5kW**
52000 m³/h / 375 N

08 **VLF-TNL-JF-1000-4P-11kW**
66500 m³/h / 497 N

09 **VLF-TNL-JF-1250-4P-22kW**
98100 m³/h / 692 N

10 **VLF-TNL-JF-1250-4P-37kW**
123700 m³/h / 1101 N

Each marker is one supplied nominal operating point, shared by its two electrical variants. Markers are not connected or extrapolated. No model pressure duty point or pressure curve is defined.

05 / DIMENSIONS

Coordinate the fan and silencers.

SERIES SCHEMATIC / NOT TO SCALE

All dimensions in mm

VLF-TNL-JF
Dimensional drawing [mm]

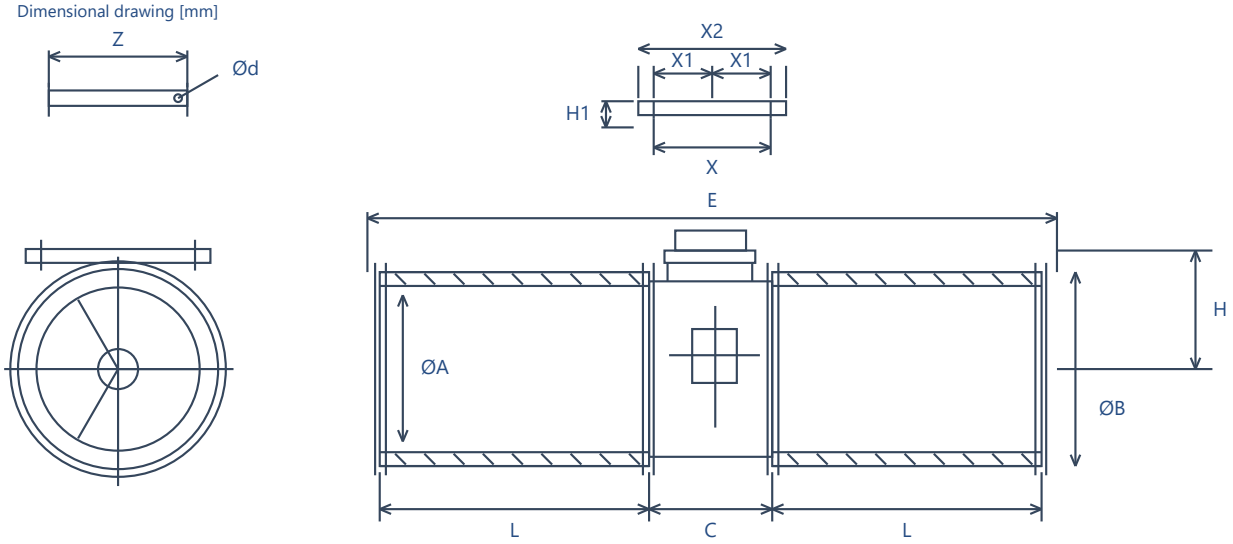

A, B and d are diameters. Model-specific values are shown in the dimensions table.

Model	ØA	ØB	C	L	Ød	E
VLF-TNL-JF-560-2P-9.2kW	560	750	500	1200	12	3093
VLF-TNL-JF-560-4P-1.5kW	560	750	500	1200	12	3093
VLF-TNL-JF-630-2P-15kW	640	800	650	1200	14	3242
VLF-TNL-JF-630-4P-2.2kW	640	800	650	1200	14	3242
VLF-TNL-JF-710-4P-3kW	710	900	500	1200	14	3092
VLF-TNL-JF-800-4P-4kW	800	1000	600	1200	14	3104
VLF-TNL-JF-900-4P-7.5kW	900	1100	600	1200	14	3105
VLF-TNL-JF-1000-4P-11kW	1000	1200	700	1200	14	3205
VLF-TNL-JF-1250-4P-22kW	1250	1503	650	1350	17	3455
VLF-TNL-JF-1250-4P-37kW	1250	1503	650	1350	17	3455

ØA is the connection diameter; ØB and Ød are also diameter dimensions. The 630 models retain ØA = 640 mm. The schematic provides label locations; it is not manufacturing CAD and supplies no tolerances.

06 / MOUNTING DATA & ACOUSTICS

Mounting detail. Acoustic reference.

MOUNTING DIMENSIONS / mm

Model	H	H1	X	X1	X2	Z
VLF-TNL-JF-560-2P-9.2kW	503	80	558	345	750	465
VLF-TNL-JF-560-4P-1.5kW	503	80	558	345	750	465
VLF-TNL-JF-630-2P-15kW	525	80	706	418	900	545
VLF-TNL-JF-630-4P-2.2kW	525	80	706	418	900	545
VLF-TNL-JF-710-4P-3kW	600	80	558	345	750	465
VLF-TNL-JF-800-4P-4kW	655	80	656	395	855	730
VLF-TNL-JF-900-4P-7.5kW	675	80	677	405.5	876	825
VLF-TNL-JF-1000-4P-11kW	730	80	767	450	965	884
VLF-TNL-JF-1250-4P-22kW	953	100	717	575	1250	1150
VLF-TNL-JF-1250-4P-37kW	953	100	717	575	1250	1150

OCTAVE-BAND SOUND POWER / LwA / dB(A)

Model	63 Hz	125 Hz	250 Hz	500 Hz	1 kHz	2 kHz	4 kHz	8 kHz
VLF-TNL-JF-560-2P-9.2kW	66	72	90	79	82	81	79	70
VLF-TNL-JF-560-4P-1.5kW	52	58	76	65	68	67	65	56
VLF-TNL-JF-630-2P-15kW	70	76	94	83	86	85	83	74
VLF-TNL-JF-630-4P-2.2kW	55	61	79	68	71	70	68	59
VLF-TNL-JF-710-4P-3kW	67	73	91	80	83	82	80	71
VLF-TNL-JF-800-4P-4kW	65	71	89	78	81	80	78	69
VLF-TNL-JF-900-4P-7.5kW	67	73	91	80	83	82	80	71
VLF-TNL-JF-1000-4P-11kW	65	71	89	78	81	80	78	69
VLF-TNL-JF-1250-4P-22kW	61	67	85	74	77	76	74	65
VLF-TNL-JF-1250-4P-37kW	64	70	88	77	80	79	77	68

Sound-power bands are A-weighted. Sound pressure at 10 m and maximum airflow appears on page 3; it is a separate quantity. The two electrical variants share the same dimensional and acoustic references.

07 / CONFIGURATION & INSTALLATION

Specify the supplied configuration.

F300 / F400 OPTIONS IN ONE MODEL RANGE

Configuration / service	Declared range or requirement
F300 configuration	300 °C / 2 h
F400 configuration	400 °C / 2 h
Model availability	Both options listed for all ten base models
Documentation	Confirm supplied fan marking and documents
Continuous air temperature	-25 to +40 °C
Warm-climate option	Up to +50 °C; confirmation required

Configuration availability is listed separately from certification. A model-specific Voltvent certificate has not been verified. Confirm the complete supplied fan configuration and documentation for the intended application.

MOUNTING AND SUPPORT

Coordinate the assembly.

Use the selected model dimensions and approximate mass when coordinating the supports, vibration isolation and safety anchoring. Allow access to the motor and external terminal box.

AIRFLOW AND CONNECTION

Keep both ends clear.

The impeller is unidirectional. Provide unobstructed inlet and discharge paths. Follow the instructions supplied with the unit for installation, electrical connection and maintenance.

Electrical terminal diagrams, model-specific pressure/power/efficiency curves and manufacturing tolerances are not supplied. This catalogue retains the available nominal, dimensional and acoustic references without adding unverified arrangements.

VLF-TNL-JF

Tunnel jet fans

VOLTVENT®
VENTILATION SYSTEMS

info@voltvent.com | voltvent.com