VOLTVENT®
VENTILATION SYSTEMS

VPS SERIES

Single inlet centrifugal fans

VPS

FORWARD-CURVED IMPELLER

SHEET-METAL SCROLL CASING



250-600
Nominal airflow / m^3/h

04
Models in the range

50 Hz
Single-phase AC

info@voltvent.com | voltvent.com

01 / PRODUCT OVERVIEW

Compact airflow for equipment.

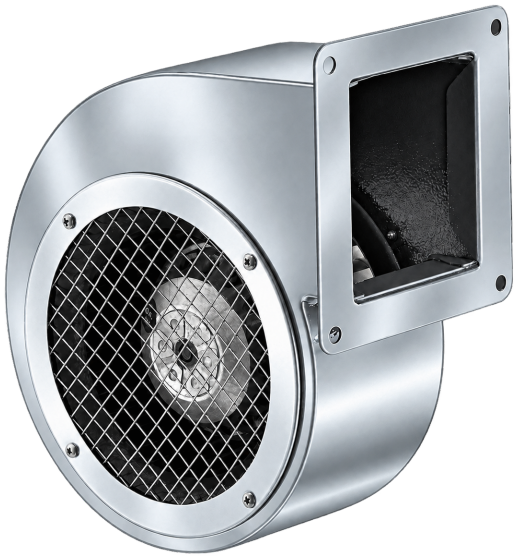

01 Single-inlet centrifugal design

A galvanized steel, forward-curved impeller operates inside a compact sheet-metal scroll casing. An inlet wire guard protects the opening.

02 Rectangular discharge flange

The discharge flange connects to equipment or ductwork. Use the model-specific opening and mounting dimensions to plan the connection.

03 Ventilation and combustion air

For fresh-air supply, equipment ventilation and combustion-air applications. Four single-phase models cover the supplied 50 Hz range.

SELECTION & PERFORMANCE

Choose the airflow and pressure.

Select each model using its individual static-pressure curve. Nominal input power, speed, current and airflow are ratings; operating values vary with duty. Compatible voltage regulation is available for speed control; the catalogue curves represent the supplied fixed-speed 50 Hz data.

Selection parameter	Technical overview
Nominal airflow range	250-600 m^3/h
Nominal input power	80-200 W
Electrical supply	230 V / 1 phase / 50 Hz / 2 poles
Motor insulation / protection	Class B / IP44 / TEAO / IE1
Operating / transported-air limit	-20 to +40 °C / max. +40 °C

Performance data. Observe the motor nameplate and supplied connection diagram.

02 / TECHNICAL DATA

Compare the four models.

NOMINAL RATINGS / 230 V / 1 PHASE / 50 Hz

Model	Input W	Airflow m^3/h	Speed rpm	Current A	Weight kg
VPS 120-60	85	275	2250	0.38	2.5
VPS 125-50	80	250	2450	0.35	2.3
VPS 140-60	138	485	2300	0.61	3.2
VPS 160-60	200	600	2250	0.88	4.3

Airflow is the nominal maximum, not a selected duty point. Input power, current and speed are nominal ratings; do not substitute them for operating values from the selection software at the selected duty.

CONNECTIONS & ACOUSTIC REFERENCES

Model	Discharge opening H x E / mm	Sound pressure dB(A) / 3 m	Capacitor µF / V
VPS 120-60	81 x 68.5	46	2.5 / 400
VPS 125-50	66 x 62	42	2.5 / 400
VPS 140-60	83.5 x 91.5	48	4 / 400
VPS 160-60	84 x 92.5	52	6 / 400

Sound pressure is a selection data at 3 m. Sound power and octave-band spectra were not supplied. All models use two-pole AC motors, Class B insulation, IP44 protection, TEAO cooling, IE1 efficiency and S1 continuous duty.

Maximum transported-air temperature: +40 °C. Operating range: -20 to +40 °C. Capacitor voltage is the component rating; supply voltage remains 230 V.

03 / AIR PERFORMANCE

Fan Performance Curves

VPS 120-60

230 V / 1 phase / 50 Hz / 85 W nominal

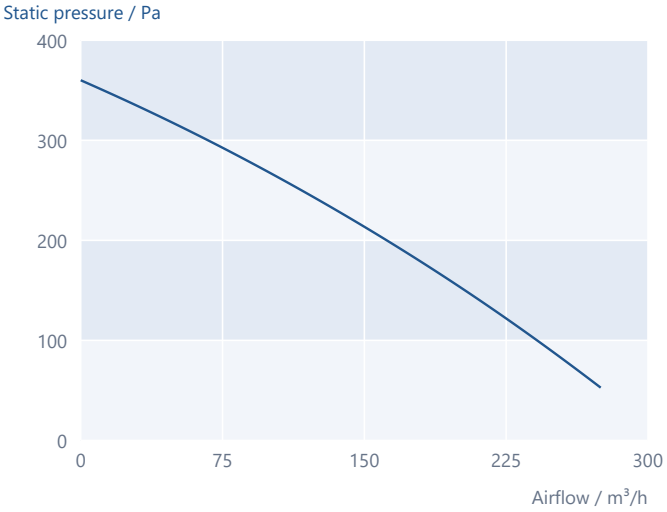

VPS 125-50

230 V / 1 phase / 50 Hz / 80 W nominal

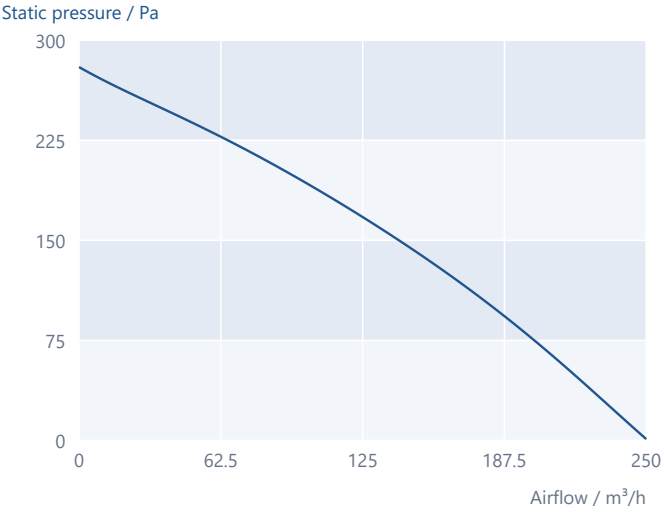

VPS 140-60

230 V / 1 phase / 50 Hz / 138 W nominal

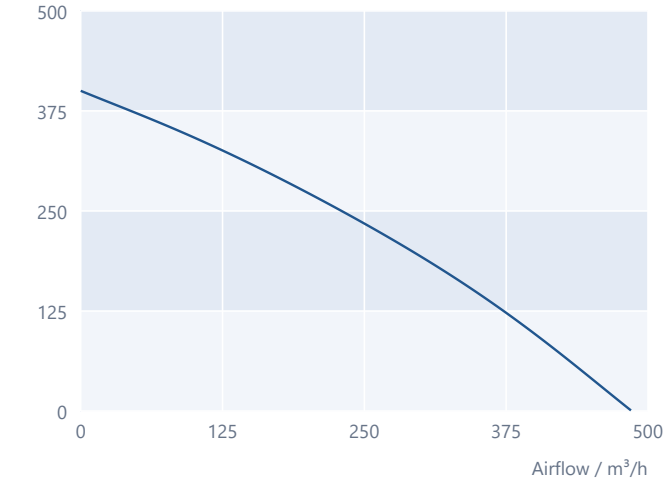

VPS 160-60

230 V / 1 phase / 50 Hz / 200 W nominal

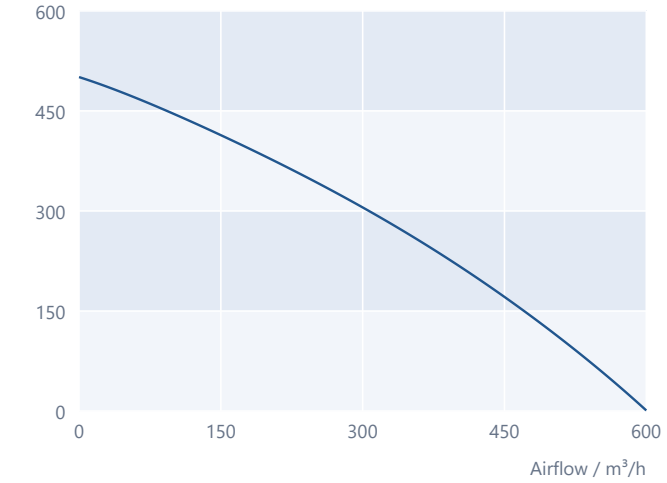

Model-specific scales. Listed reference curves are plotted only within their supplied airflow domains, with no extrapolation. VPS 120-60 ends at 275 m³/h with approximately 53 Pa; the curve differs from its nominal pressure rating.

04 / DIMENSIONAL DATA

Plan the discharge connection.

ORIGINAL SERIES DRAWING / A-H, J, L-N

All dimensions in mm

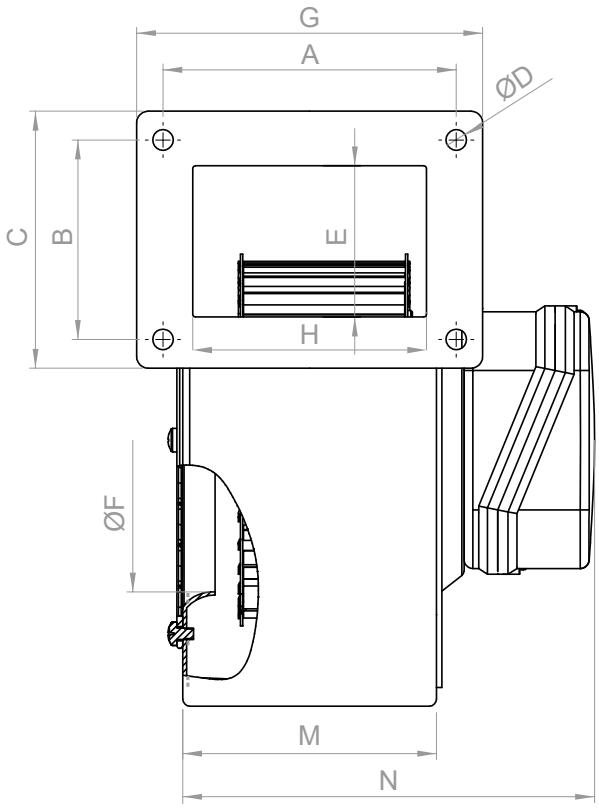

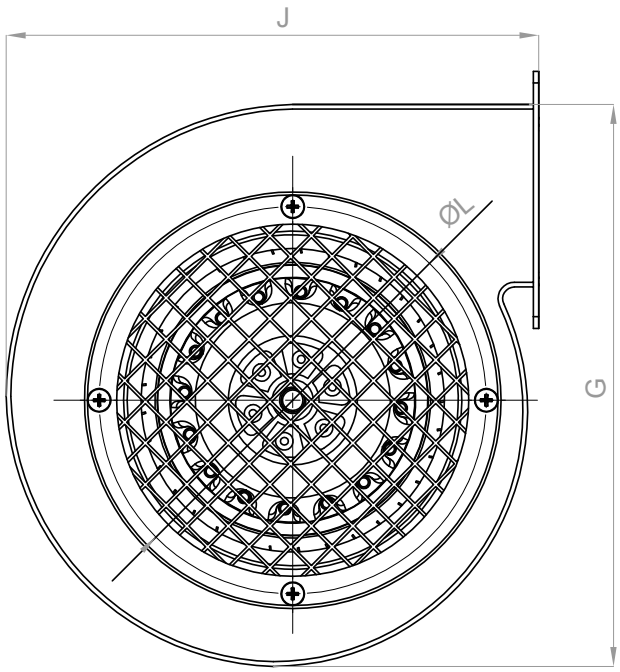

Model	A	B	C	D	E	F	G	H	J	L	M	N
VPS 120-60	98.5	68.5	100	5	68.5	97.5	115.5	81	173	133	86	145
VPS 125-50	77	72	88	5	62	98	86	66	170	128	68	142
VPS 140-60	112	112	129.3	5	91.5	112	129	83.5	206	151	91	148
VPS 160-60	112	112	129.3	5	92.5	130	129	84	270	165	93	152

Product vector drawing. H x E defines the rectangular discharge opening. Dimension K is absent from the supplied drawing and its declared label list; no K dimension is added. Values follow the current FSP records.

05 / INSTALLATION & MOTOR

Prepare the installation.

01 Mounting and airflow

Use the model-specific flange and mounting dimensions. Secure the assembly to a rigid support, keep the inlet guard and outlet clear and allow access for cleaning.

02 Electrical configuration

All supplied models use 230 V single-phase, 50 Hz AC motors with two poles. Match the capacitor to the model: 2.5, 4 or 6 microfarads, rated 400 V.

03 Speed control and duty

Compatible linear voltage regulation can be used for speed control. Confirm controller suitability for the motor. Class B, IP44, TEAO, IE1 and S1 continuous duty follow the FSP records.

04 Inspection and servicing

Isolate the supply before servicing. Clean the impeller and inlet guard, inspect the casing and flange fixings, and keep motor cooling paths clear.

OPERATING LIMITS

Maximum transported-air temperature is +40 °C. Operating range is -20 to +40 °C. Use the actual motor nameplate and the connection diagram on the next page for the supplied unit.

06 / ELECTRICAL CONNECTION

Single-phase connection.

LAYOUT 01 / 230 V / 50 Hz

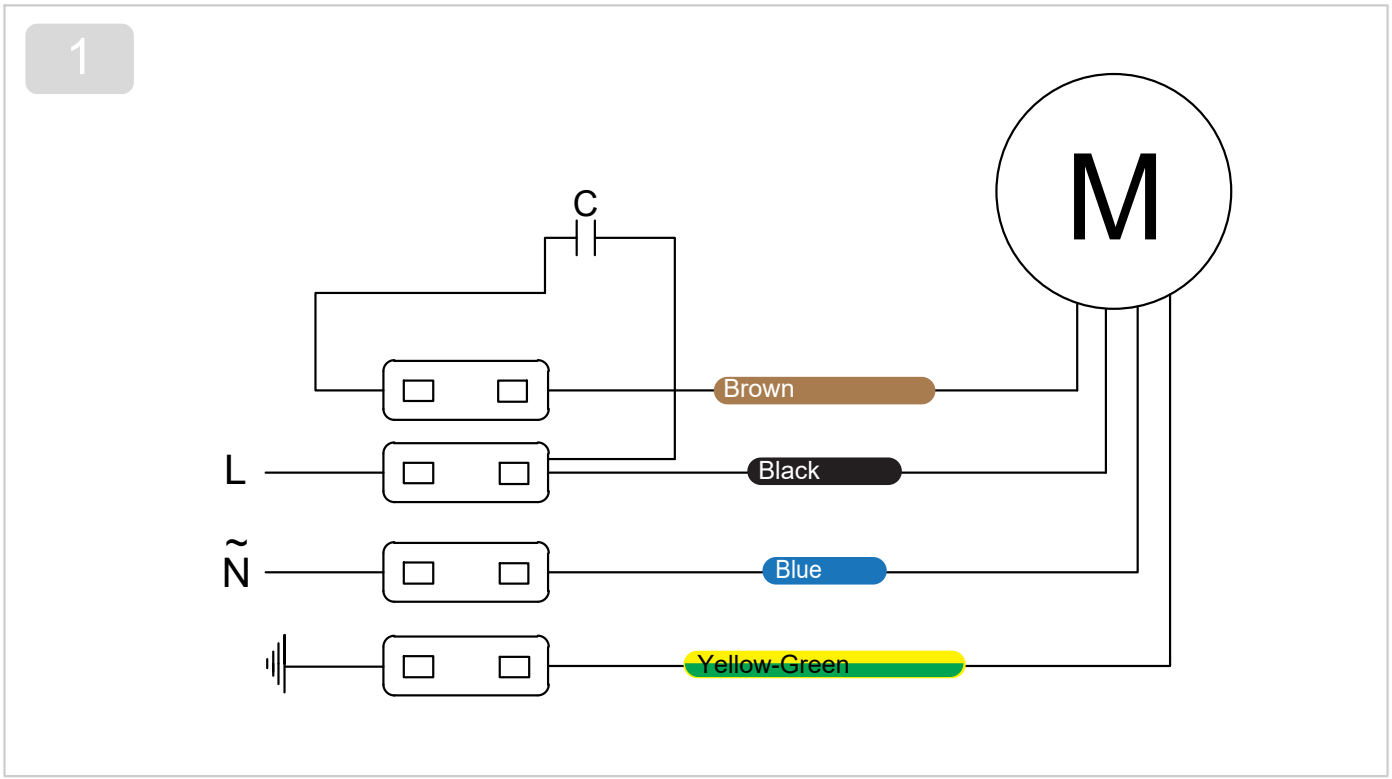

CONNECTION KEY

Marking	Function
L / N	Line / neutral
Earth symbol	Protective earth / yellow-green
C	Motor capacitor / see model table
M	Motor

Listed conductor colours and connection topology are preserved. Labels are translated into English. Confirm the actual unit nameplate and supplied terminal diagram before connection; electrical work must be performed by qualified personnel.

VPS

Single inlet centrifugal fans



info@voltvent.com | voltvent.com