VOLTVENT®
VENTILATION SYSTEMS

APPLICATION & PRODUCT BROCHURE

Inline duct fans.

Behind the ceiling. Along the duct.

Circular connections. Rectangular routes.

Six complementary series for circular and rectangular inline building ventilation.



VCF



VMF



VBF

6
Fan series

48
Listed model / configuration rows

50 Hz
Selection data

THE RANGE / SERIES GUIDE

Find your fan.

Every listed series has its own application, airflow data, actual dimensions and installation / mounting section.

01		VCF	Circular inline duct fans	05
02		VMF	Mixed flow inline duct fans	09
03		VCAF	Axial inline duct fans	13
04		VBF	Rectangular inline duct fans	17
05		VBF-R	Rectangular inline centrifugal duct fans	21
06		VBX	Acoustic box fans	25

In every series section
Airflow table / dimensional drawing / actual dimensions / installation and mounting

SELECTION / RANGE OVERVIEW

Compare the series.

Airflow references retain their model-specific rating basis. Compare the selected operating duty with the complete system resistance.

Series	Connection / casing	Listed rows	Upper airflow m³/h	Rating basis
VCF	Circular	8	2 620	Curve limit
VMF	Circular	7	1 970	Curve limit
VCAF	Circular	4	3 110	Curve limit
VBF	Rectangular / box	9	9 600	Curve limit
VBF-R	Rectangular / box	7	9 800	Curve limit
VBX	Circular	13	9 300	Nominal table

Curve limit: upper supplied performance-curve domain. Angle envelope: upper endpoint across listed blade angles. Calculated domain: affinity-law configuration. Nominal table: the approved nominal airflow rating; VBX curve endpoints are shown separately in its section.

Connection geometry Circular and rectangular interfaces across six series.

Compact arrangement Coordinate casing size with the available duct route.

Service access Plan access to the fan, motor and inspection opening.

BUILDING APPLICATIONS



Every room.
A planned air path.

Work. Learn. Gather.

Start with the required duty and duct geometry. Coordinate the fan connection, access and support within the building air route.

Connection geometry

Circular and rectangular interfaces across six series.

Compact arrangement

Coordinate casing size with the available duct route.

Service access

Plan access to the fan, motor and inspection opening.

Application photos are illustrative settings, not records of a Voltvent installation at those locations.

VOLTVENT®
VENTILATION SYSTEMS

01 / VCF

Compact fan. Everyday air.



VCF

Galvanized housing. Circular connections.

A backward-curved centrifugal impeller and external rotor motor fit inside a compact circular casing. Supplied mounting feet support the installation concept.

8
Listed models / configurations

2 620*
Upper airflow reference / m³/h

50 Hz
Reference frequency

* Rating basis is defined in the following technical table.

VCF / AIRFLOW & MOTOR DATA

Compare the range.

Approved model references / 50 Hz. See the rating basis and operating-point notes below.

Model	Duct size mm	Max. airflow* m³/h	Input power W	Current A	Speed rpm	Weight kg
VCF 100	100	240	60	0.3	2610	2.6
VCF 125	125	315	80	0.4	2325	2.7
VCF 150	150	422	78	0.4	2450	3
VCF 160	160	440	85	0.4	2550	3.2
VCF 200	200	875	100	0.51	2530	4.8
VCF 250	250	1150	145	0.74	2650	5.3
VCF 315	315	1750	200	0.87	2500	6.9
VCF 355	355	2620	445	1.94	2450	10

01

Backward-curved impeller

02

External rotor motor

03

Supplied mounting feet

* Maximum airflow is the upper limit of the supplied performance-curve range, rounded to whole m³/h. It is not a selected duty-point value. Other electrical ratings are nominal catalogue references. Actual power, current and speed depend on the operating point. 1~230 V / 50 Hz.

VCF / DRAWING & DIMENSIONS

Plan the physical envelope.

Approved product drawing. All dimension values are in mm; drawing not to scale.

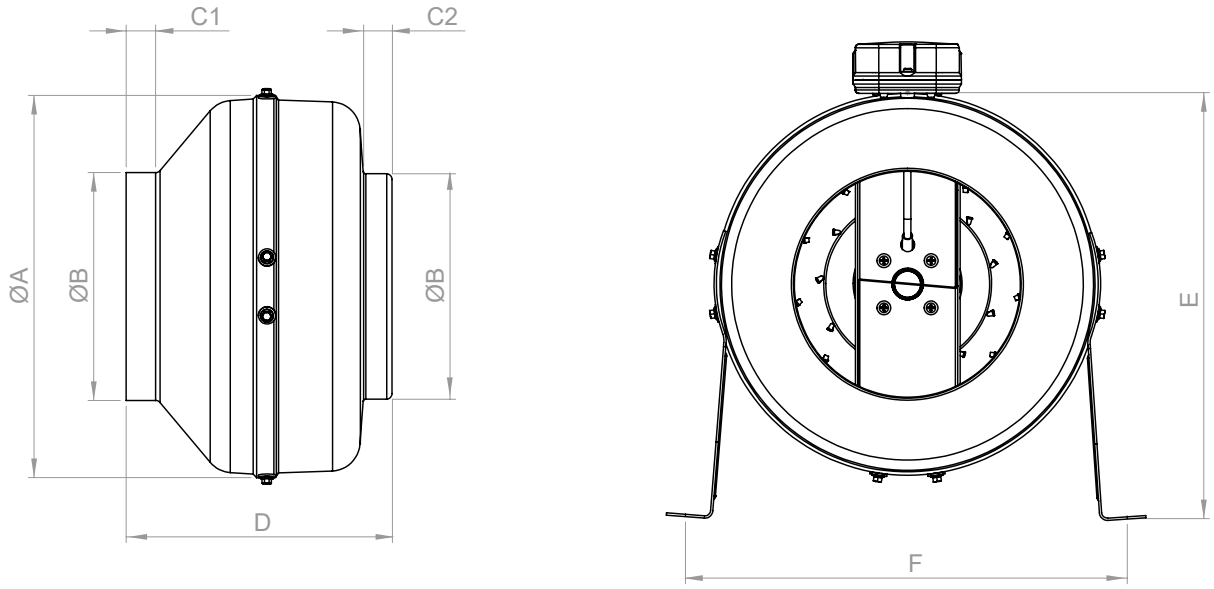

Model	Ø A	Ø B	C1	C2	D	E	F
VCF 100	245	97	20	20	197	273	268
VCF 125	245	122	20	20	188	273	268
VCF 150	272	147	23	25	192	286	295
VCF 160	272	157	23	25	192	286	295
VCF 200	330	196	30	28	230	380	352
VCF 250	330	247	30	28	227	380	352
VCF 315	400	313	30	30	285	415	422
VCF 355	400	352	30	30	378	415	422

Dimension labels retain their drawing definitions. Use the row for the selected size and coordinate the duct interfaces, access and support arrangement.

VCF / INSTALLATION & MOUNTING

Connect. Support. Service.

Illustrative arrangements; not to scale. Use the selected unit drawing and installation instructions.

01 / INSTALLATION CONCEPT

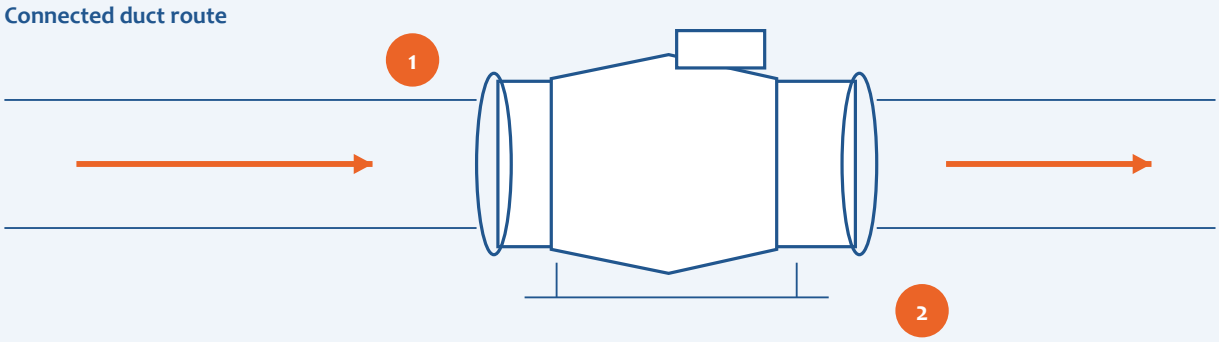

Airflow direction shown illustratively

Confirm the actual inlet / discharge arrangement and orientation for the selected assembly.

02 / MOUNTING & ACCESS CONCEPT

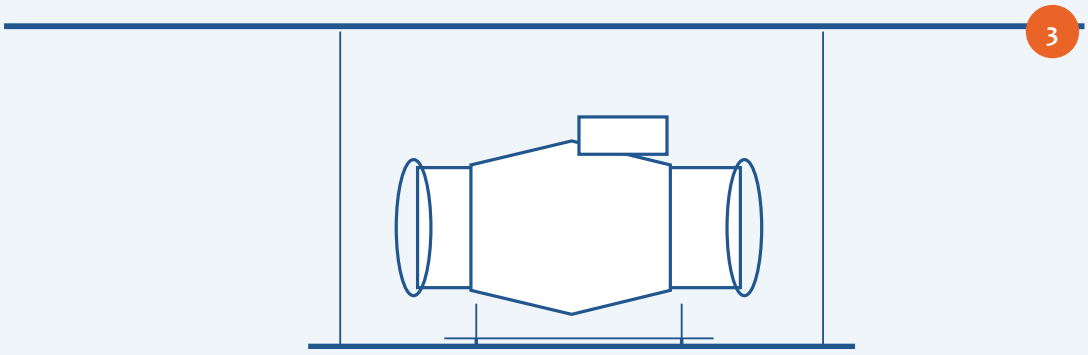

Illustrative support frame

01 Duct interfaces

Match the actual connection sizes and the selected inlet / outlet arrangement.

02 Service access

Retain access to the fan, motor and inspection opening.

03 Support design

Coordinate a support system for the selected assembly; do not load the unit through ductwork.

Concept drawings do not specify support loads, fixing capacities or minimum clearances. Confirm mounting orientation, vibration treatment, support structure and access against the selected unit instructions and project design.

A clear route.
A compact fit.



VMF

Mixed-flow impeller. Integrated base.

Axial and centrifugal flow characteristics meet in a Vo plastic housing. Circular duct connections and an integrated base define the compact assembly.

7
Listed models / configurations

1 970*
Upper airflow reference / m³/h

50 Hz
Reference frequency

* Rating basis is defined in the following technical table.

VMF / AIRFLOW & MOTOR DATA

Compare the range.

Approved model references / 50 Hz. See the rating basis and operating-point notes below.

Model	Duct size mm	Max. airflow* m³/h	Ref. power W	Ref. speed rpm	Weight kg	Protection
VMF 100	100	234	54	2460	1.8	IP44
VMF 125	125	337	56	2560	2	IP44
VMF 150	150	504	75	2490	2.7	IP44
VMF 160	160	560	75	2490	2.7	IP44
VMF 200	200	1012	111	2410	4.8	IP44
VMF 250	250	1300	280	2460	9.4	IP44
VMF 315	315	1970	476	2476	11	IP44

01

Mixed-flow geometry

02

Vo plastic casing

03

Integrated mounting base

* Maximum airflow is the upper limit of the supplied performance-curve range, rounded to whole m³/h. It is not a selected duty-point value. Single-phase 230 V / 50 Hz; class F; -20 to +50°C. Power and speed are catalogue reference ratings.

VMF / DRAWING & DIMENSIONS

Plan the physical envelope.

Approved product drawing. All dimension values are in mm; drawing not to scale.

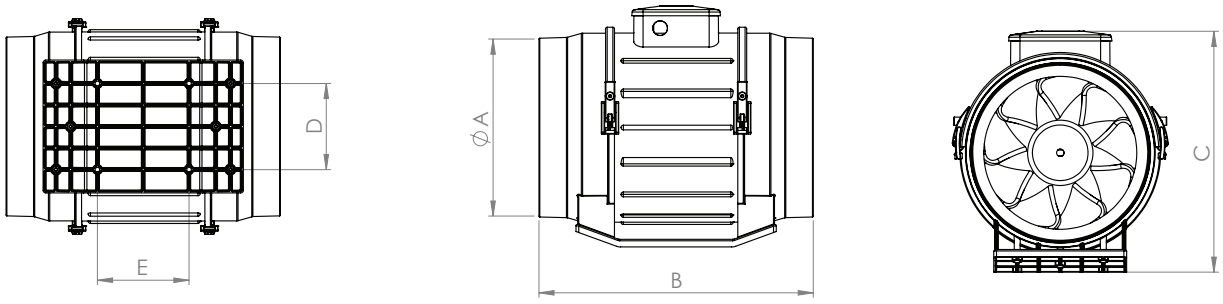

Model	A	B	C	D	E
VMF 100	96	306.5	215	60	80
VMF 125	121	260	215	60	80
VMF 150	146	290.5	242	60	80
VMF 160	156	271	242	60	80
VMF 200	191	300	263	94	100
VMF 250	246	393	325	110	140
VMF 315	310	450	420	175	180

Dimension labels retain their drawing definitions. Use the row for the selected size and coordinate the duct interfaces, access and support arrangement.

VMF / INSTALLATION & MOUNTING

Connect. Support. Service.

Illustrative arrangements; not to scale. Use the selected unit drawing and installation instructions.

01 / INSTALLATION CONCEPT

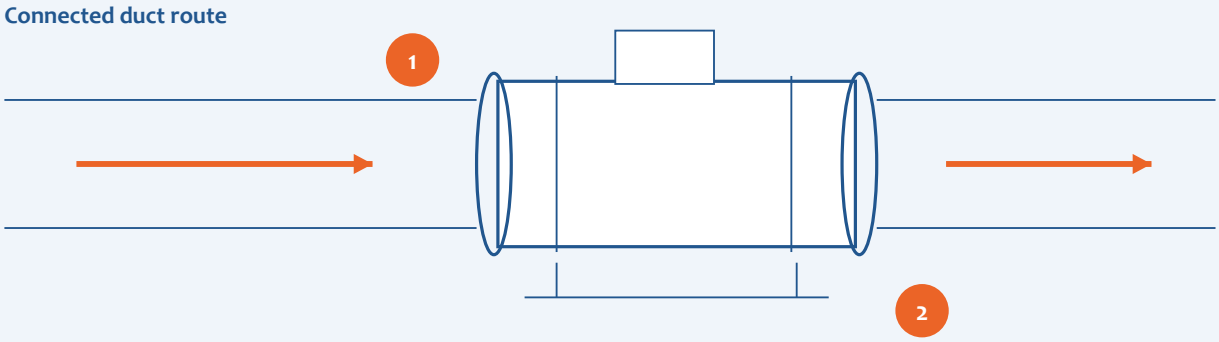

Airflow direction shown illustratively

Confirm the actual inlet / discharge arrangement and orientation for the selected assembly.

02 / MOUNTING & ACCESS CONCEPT

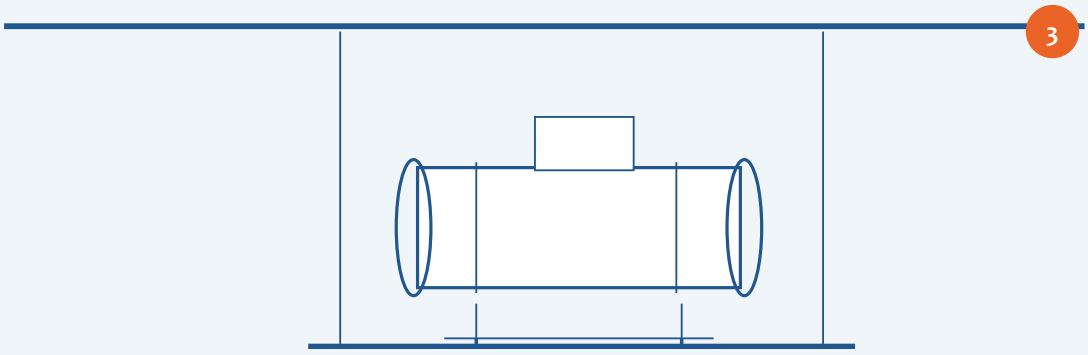

Illustrative support frame

01 Duct interfaces

Match the actual connection sizes and the selected inlet / outlet arrangement.

02 Service access

Retain access to the fan, motor and inspection opening.

03 Support design

Coordinate a support system for the selected assembly; do not load the unit through ductwork.

Concept drawings do not specify support loads, fixing capacities or minimum clearances. Confirm mounting orientation, vibration treatment, support structure and access against the selected unit instructions and project design.



Straight through.
Into the duct.

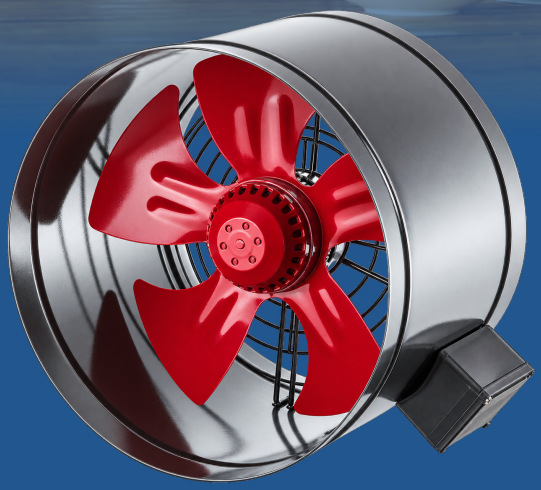

VCAF

Axial airflow. Steel tube construction.

A sheet-steel axial impeller operates inside a powder-coated cylindrical casing. The series covers four nominal circular duct sizes.

4
Listed models / configurations

3 110*
Upper airflow reference / m³/h

50 Hz
Reference frequency

* Rating basis is defined in the following technical table.

VCAF / AIRFLOW & MOTOR DATA

Compare the range.

Approved model references / 50 Hz. See the rating basis and operating-point notes below.

Model	Duct size mm	Max. airflow* m³/h	Input power W	Current A	Speed rpm	Weight kg
VCAF 200	200	682	63	0.28	2750	2.7
VCAF 250	250	1485	100	0.5	2700	3.6
VCAF 300	300	2020	140	0.6	2600	4.6
VCAF 350	350	3110	200	0.9	2050	5.6

01

Axial impeller

02

Protective wire guard

03

200-350 mm nominal sizes

* Maximum airflow is the upper limit of the supplied performance-curve range, rounded to whole m³/h. It is not a selected duty-point value. 1~230 V / 50 Hz; IP44 / class B; -20 to +40°C. Maximum transported air +40°C. Full-voltage reference performance.

VCAF / DRAWING & DIMENSIONS

Plan the physical envelope.

Approved product drawing. All dimension values are in mm; drawing not to scale.

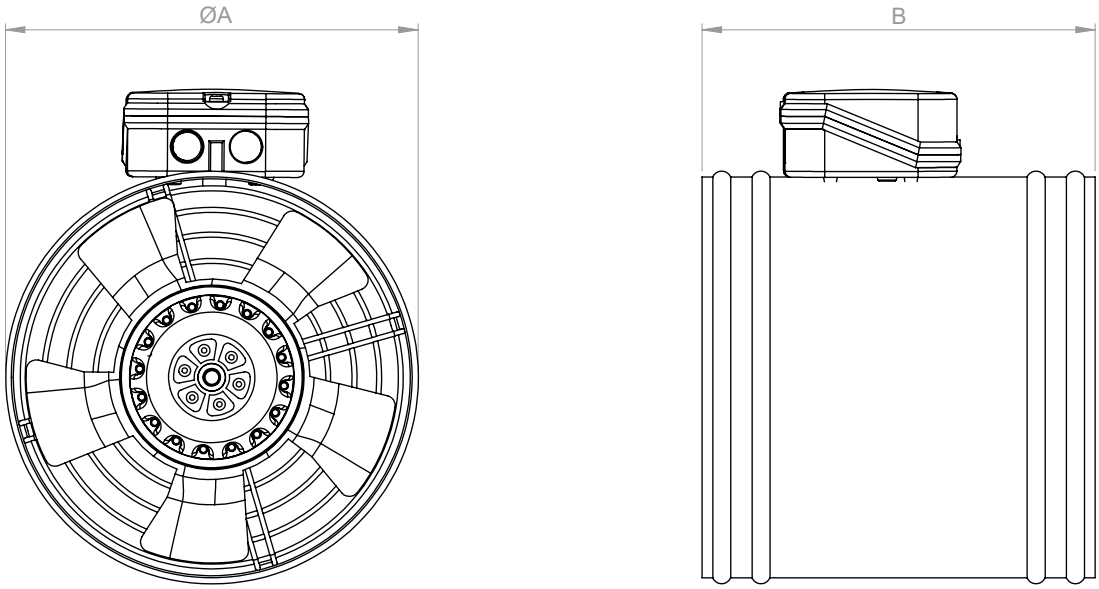

Model	Nominal duct size / mm	Ø A	B
VCAF 200	200	200	200
VCAF 250	250	250	250
VCAF 300	300	300	250
VCAF 350	350	355	250

Nominal size 350 uses the listed 355 mm A dimension. Use actual drawing values for installation, rather than inferring dimensions from the model code.

VCAF / INSTALLATION & MOUNTING

Connect. Support. Service.

Illustrative arrangements; not to scale. Use the selected unit drawing and installation instructions.

01 / INSTALLATION CONCEPT

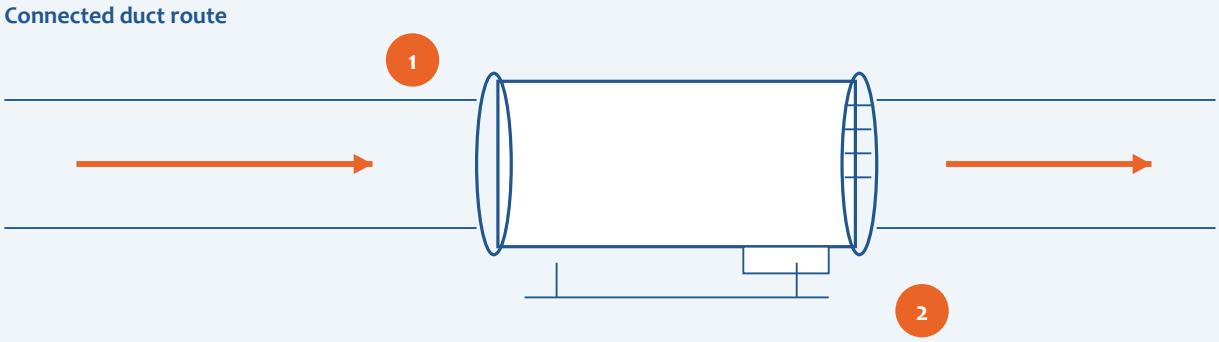

Airflow direction shown illustratively

Confirm the actual inlet / discharge arrangement and orientation for the selected assembly.

02 / MOUNTING & ACCESS CONCEPT

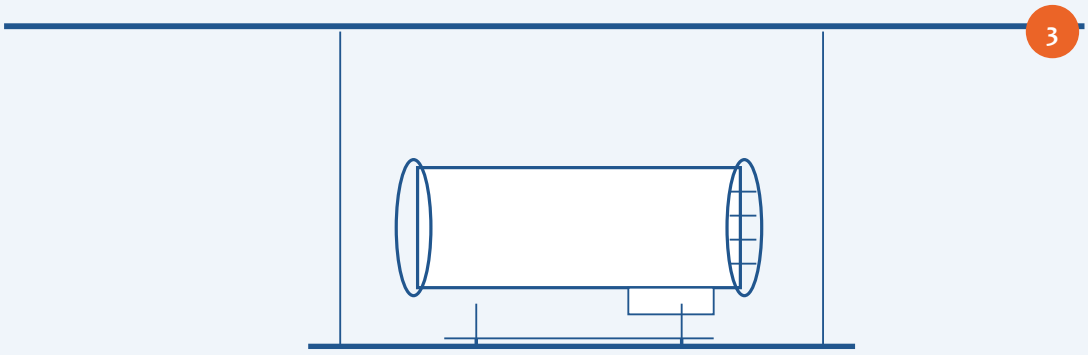

Illustrative support frame

01 Duct interfaces

Match the actual connection sizes and the selected inlet / outlet arrangement.

02 Service access

Retain access to the fan, motor and inspection opening.

03 Support design

Coordinate a support system for the selected assembly; do not load the unit through ductwork.

Concept drawings do not specify support loads, fixing capacities or minimum clearances. Confirm mounting orientation, vibration treatment, support structure and access against the selected unit instructions and project design.

Built around the duct.

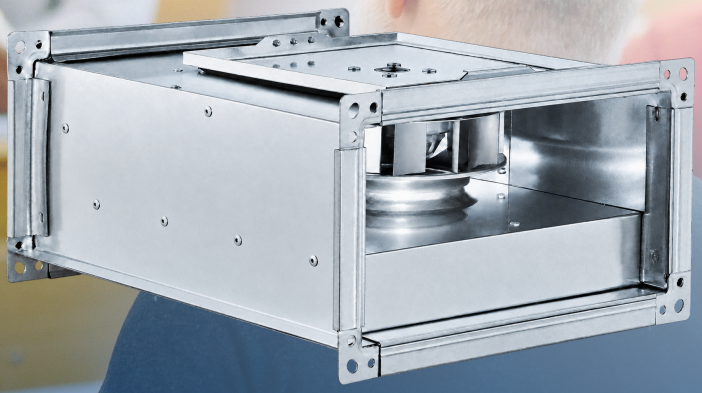

VBF

Rectangular flanges. Service access.

Galvanized steel construction connects directly to rectangular ductwork. An access lid opens the motor and backward-curved impeller assembly for maintenance.

9
Listed models / configurations

9 600*
Upper airflow reference / m³/h

50 Hz
Reference frequency

* Rating basis is defined in the following technical table.

VBF / AIRFLOW & MOTOR DATA

Compare the range.

Approved model references / 50 Hz. See the rating basis and operating-point notes below.

Model	Duct size mm	Max. airflow* m³/h	Power W	Current A	Speed rpm	Supply V / phase	Weight kg
VBF 30-15M	300x150	450	75	0.37	2450	230 / 1	7
VBF 40-20 A	400x200	950	130	0.55	2650	230 / 1	10.5
VBF 40-20 B	400x200	1150	165	0.73	2650	230 / 1	11
VBF 50-25	500x250	1610	240	1.1	2600	230 / 1	15
VBF 60-30	600x300	1850	190	0.85	1440	230 / 1	29
VBF 60-35M B	600x350	3300	250	1.15	1400	230 / 1	32
VBF 70-40M B	700x400	5400	660	3	1350	230 / 1	46
VBF 80-50T	800x500	7550	1150	2.5	1400	400 / 3	84
VBF 100-50T	1000x500	9600	2000	3.8	1300	400 / 3	84

01

Galvanized casing

02

Backward-curved impeller

03

Rectangular duct flanges

* Maximum airflow is the upper limit of the supplied performance-curve range, rounded to whole m³/h. It is not a selected duty-point value. Other ratings are nominal 50 Hz references. Match the model-specific electrical supply to the installation.

VBF / DRAWING & DIMENSIONS

Plan the physical envelope.

Approved product drawing. All dimension values are in mm; drawing not to scale.

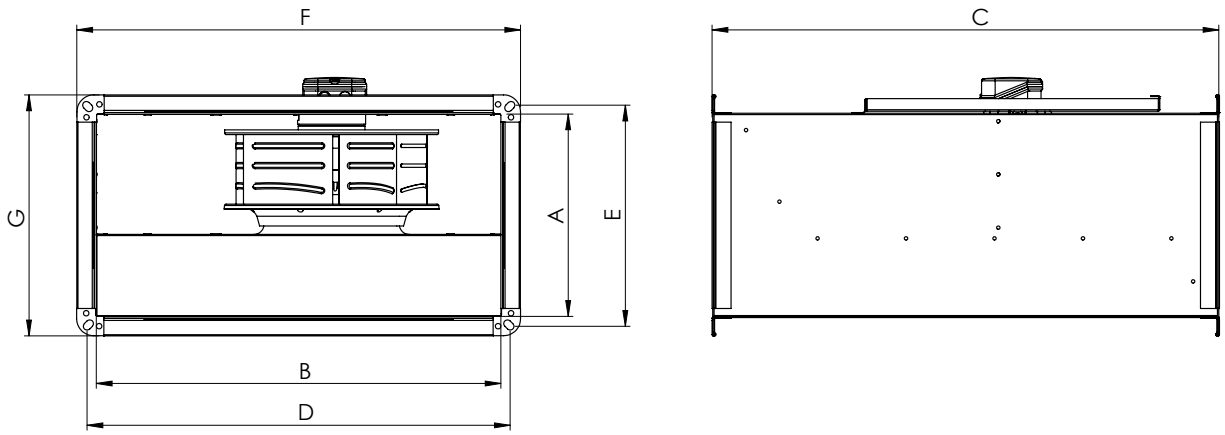

Model	A	B	C	D	E	F	G
VBF 30-15M	150	300	400	320	170	350	200
VBF 40-20 A	200	400	500	420	220	450	250
VBF 40-20 B	200	400	500	420	220	450	250
VBF 50-25	250	500	565	520	270	550	300
VBF 60-30	300	600	750	620	320	660	360
VBF 60-35M B	350	600	750	620	370	660	410
VBF 70-40M B	400	700	800	720	420	770	470
VBF 80-50T	500	800	920	820	520	870	570
VBF 100-50T	500	1000	1050	1030	530	1070	570

Dimension labels retain their drawing definitions. Use the row for the selected size and coordinate the duct interfaces, access and support arrangement.

VBF / INSTALLATION & MOUNTING

Connect. Support. Service.

Illustrative arrangements; not to scale. Use the selected unit drawing and installation instructions.

01 / INSTALLATION CONCEPT

Connected duct route

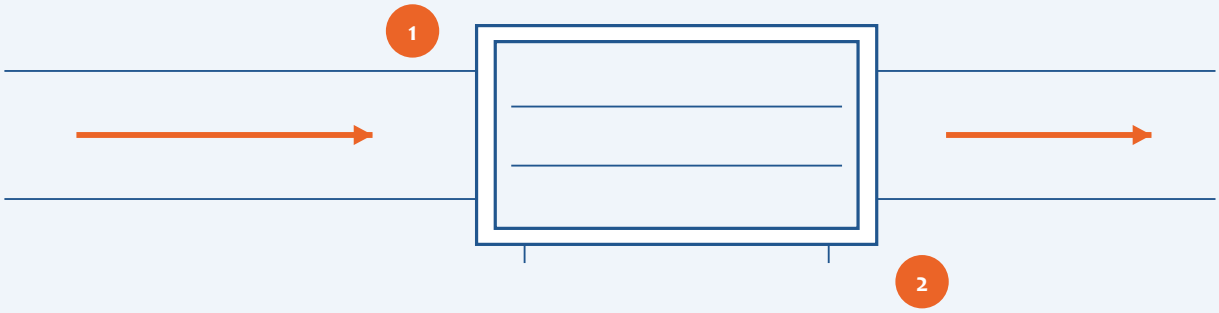

Airflow direction shown illustratively

Confirm the actual inlet / discharge arrangement and orientation for the selected assembly.

02 / MOUNTING & ACCESS CONCEPT

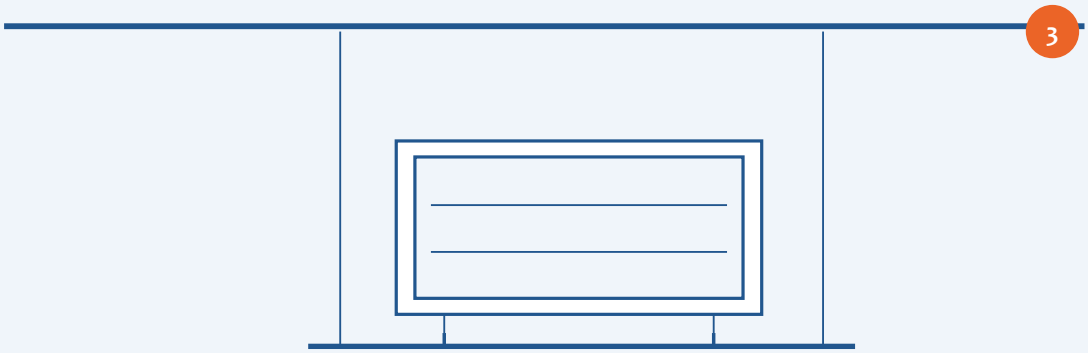

Illustrative support frame

01 Duct interfaces

Match the actual connection sizes and the selected inlet / outlet arrangement.

02 Service access

Retain access to the fan, motor and inspection opening.

03 Support design

Coordinate a support system for the selected assembly; do not load the unit through ductwork.

Concept drawings do not specify support loads, fixing capacities or minimum clearances. Confirm mounting orientation, vibration treatment, support structure and access against the selected unit instructions and project design.

The motor outside. The air moving.



VBF-R

External motor. Rectangular airflow path.

The motor sits outside the transported-air path. Rectangular duct connections and an inspection hatch support cleaning and access planning.

7
Listed models / configurations

9 800*
Upper airflow reference / m³/h

50 Hz
Reference frequency

* Rating basis is defined in the following technical table.

VBF-R / AIRFLOW & MOTOR DATA

Compare the range.

Approved model references / 50 Hz. See the rating basis and operating-point notes below.

Model	Duct size mm	Max. airflow* m³/h	Ref. power W / at 0 Pa	Ref. speed rpm / at 0 Pa	Supply V / phase
VBF-R 280	500x250	1100	180	1450	380 / 3
VBF-R 315	500x250	1600	250	1469	380 / 3
VBF-R 355	600x300	2300	370	1471	380 / 3
VBF-R 400	600x350	3300	550	1478	380 / 3
VBF-R 450	700x400	5000	750	1454	380 / 3
VBF-R 500	800x500	7000	1100	1462	380 / 3
VBF-R 560	1000x500	9800	1500	1464	380 / 3

01

Motor outside the airstream

02

Direct centrifugal drive

03

Inspection hatch

* Maximum airflow is the upper limit of the supplied performance-curve range, rounded to whole m³/h. It is not a selected duty-point value. Other values are 50 Hz catalogue references at 0 Pa. Actual power and speed depend on the operating point. Motor current and unit weight are not supplied; follow the unit nameplate.

VBF-R / DRAWING & DIMENSIONS

Plan the physical envelope.

Approved product drawing. All dimension values are in mm; drawing not to scale.

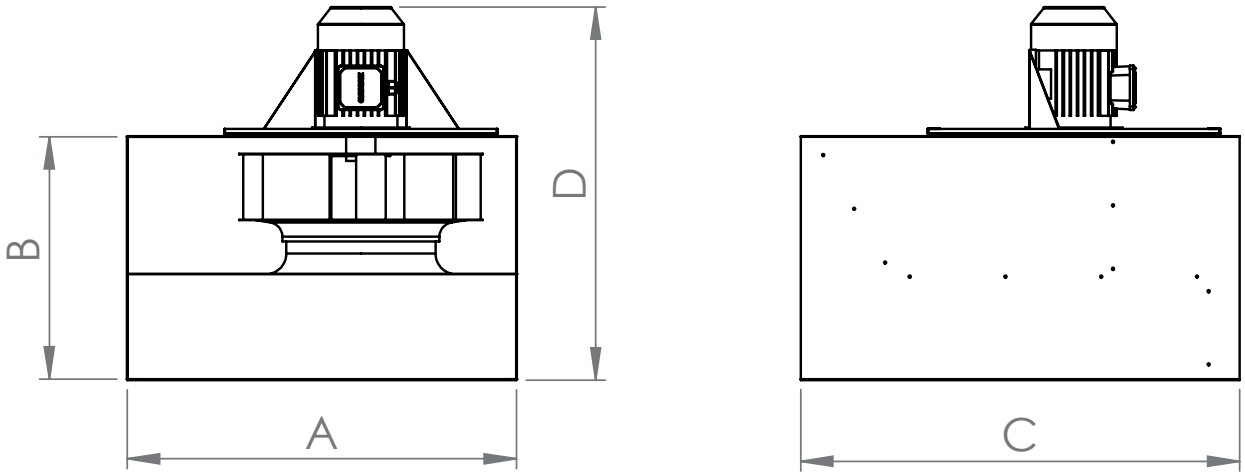

Model	A	B	C	D
VBF-R 280	500	250	565	450
VBF-R 315	500	250	565	476
VBF-R 355	600	300	760	526
VBF-R 400	600	350	750	590
VBF-R 450	700	400	790	641
VBF-R 500	800	500	900	765
VBF-R 560	1000	500	1050	790

Dimension labels retain their drawing definitions. Use the row for the selected size and coordinate the duct interfaces, access and support arrangement.

VBF-R / INSTALLATION & MOUNTING

Connect. Support. Service.

Illustrative arrangements; not to scale. Use the selected unit drawing and installation instructions.

01 / INSTALLATION CONCEPT

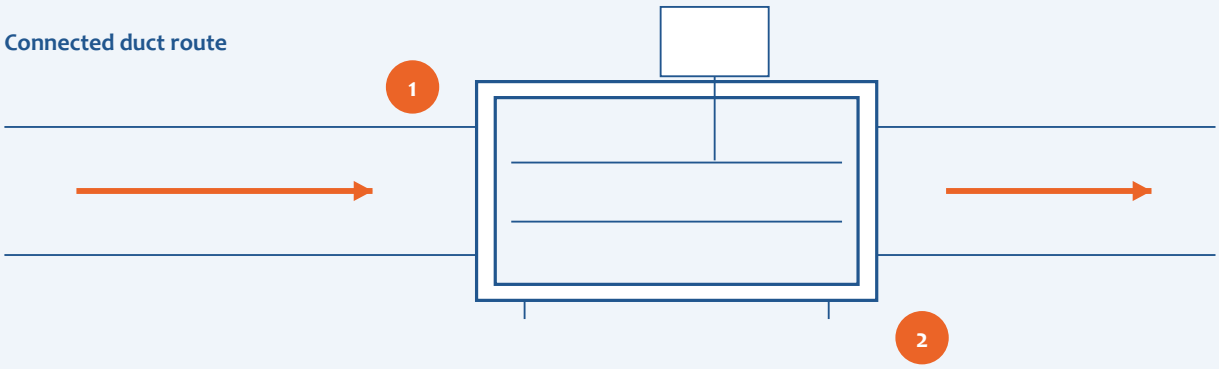

Airflow direction shown illustratively

Confirm the actual inlet / discharge arrangement and orientation for the selected assembly.

02 / MOUNTING & ACCESS CONCEPT

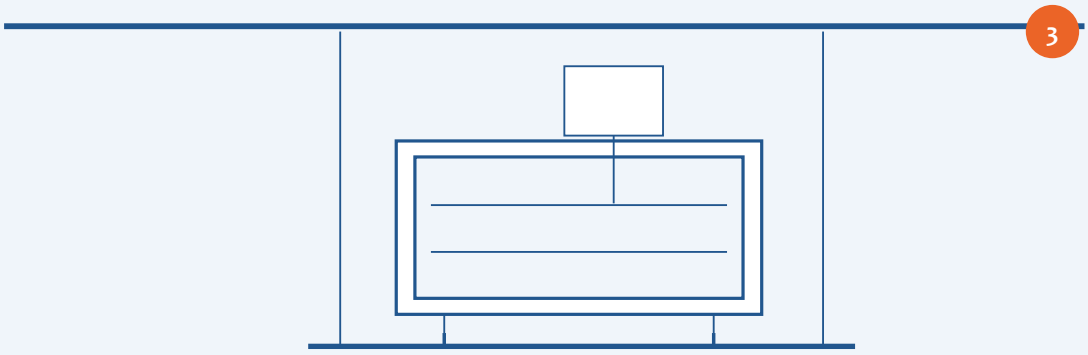

Illustrative support frame

01 Duct interfaces

Match the actual connection sizes and the selected inlet / outlet arrangement.

02 Service access

Retain access to the fan, motor and inspection opening.

03 Support design

Coordinate a support system for the selected assembly; do not load the unit through ductwork.

Concept drawings do not specify support loads, fixing capacities or minimum clearances. Confirm mounting orientation, vibration treatment, support structure and access against the selected unit instructions and project design.

Circular ducts.
An insulated box.



VBX

Centrifugal airflow. XPE casing insulation.

A galvanized sheet-metal cabinet incorporates 4 mm XPE acoustic insulation. Circular connections cover twelve nominal sizes and thirteen electrical variants.

13
Listed models / configurations

9 300*
Upper airflow reference / m³/h

50 Hz
Reference frequency

* Rating basis is defined in the following technical table.

VBX / AIRFLOW & MOTOR DATA

Compare the range.

Approved model references / 50 Hz. See the rating basis and operating-point notes below.

Model	Supply V / phase	Ref. power W	Nominal airflow m³/h	Curve endpoint m³/h	Ref. speed rpm
VBX 100	230 / 1	80	290	341	2600
VBX 125	230 / 1	80	410	486	2600
VBX 150	230 / 1	85	700	848	2600
VBX 160	230 / 1	85	710	848	2600
VBX 200	230 / 1	122	1000	1197	2675
VBX 250	230 / 1	145	1120	1361	2685
VBX 315	230 / 1	210	1750	2054	2615
VBX 355	230 / 1	380	2200	2871	2480
VBX 400	230 / 1	380	3400	4179	1362
VBX 450	230 / 1	690	4900	5836	1367
VBX 500	230 / 1	830	7000	8475	1364
VBX 500	380 / 3	830	7000	8475	1364
VBX 560	380 / 3	1460	9300	11459	1369

Nominal airflow and curve endpoint are separate approved ratings. The curve endpoint is the plotted zero-pressure airflow, rounded to whole m³/h. Power and speed are references at 0 Pa. Class F / IP44 / S1; -20 to +50°C. Motor current and unit weight are not supplied.

VBX / DRAWING & DIMENSIONS

Plan the physical envelope.

Approved product drawing. All dimension values are in mm; drawing not to scale.

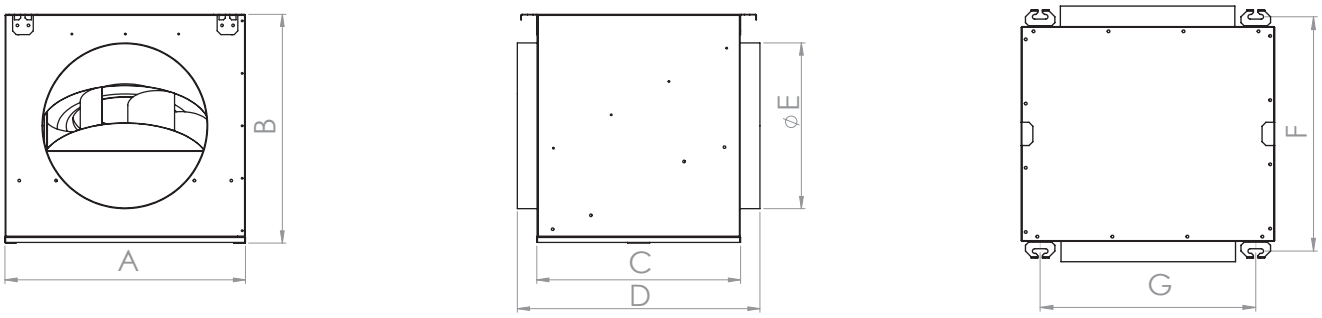

Size	A	B	C	D	E	F	G
VBX 100	342	342	304	410	100	354	246
VBX 125	342	342	304	410	125	354	246
VBX 150	342	361	304	410	150	354	246
VBX 160	342	381	304	410	160	354	246
VBX 200	392	381	354	460	225	404	296
VBX 250	472	422	354	460	250	404	382
VBX 315	502	446	404	510	315	454	406
VBX 355	572	522	454	560	355	504	477
VBX 400	602	622	554	660	400	604	506
VBX 450	652	622	554	660	450	604	556
VBX 500	702	672	604	710	500	606	654
VBX 560	752	802	604	710	560	604	656

A-G retain their approved drawing definitions. The 500-size electrical variants share one dimension row. Coordinate connection geometry from the drawing values rather than the model code alone.

VBX / INSTALLATION & MOUNTING

Connect. Support. Service.

Illustrative arrangements; not to scale. Use the selected unit drawing and installation instructions.

01 / INSTALLATION CONCEPT

Connected duct route

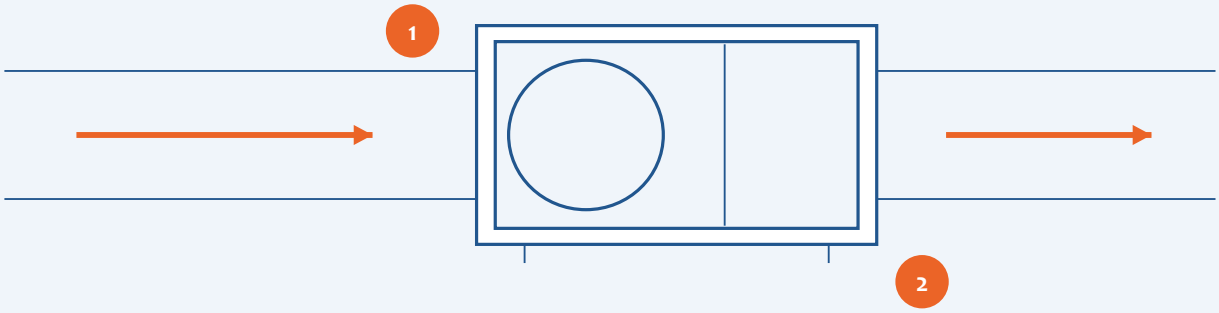

Airflow direction shown illustratively

Confirm the actual inlet / discharge arrangement and orientation for the selected assembly.

02 / MOUNTING & ACCESS CONCEPT

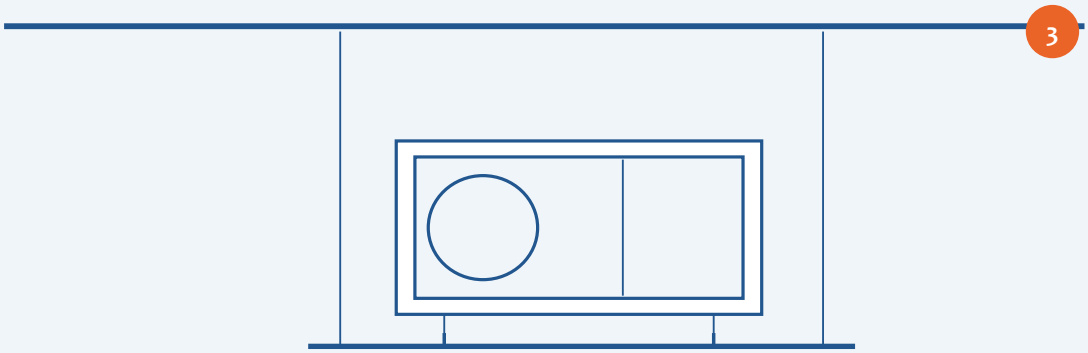

Illustrative support frame

01 Duct interfaces

Match the actual connection sizes and the selected inlet / outlet arrangement.

02 Service access

Retain access to the fan, motor and inspection opening.

03 Support design

Coordinate a support system for the selected assembly; do not load the unit through ductwork.

Concept drawings do not specify support loads, fixing capacities or minimum clearances. Confirm mounting orientation, vibration treatment, support structure and access against the selected unit instructions and project design.

PROJECT PLANNING / COORDINATION

Make the interfaces work.

Select the operating duty, then coordinate the physical assembly, duct route and service strategy.

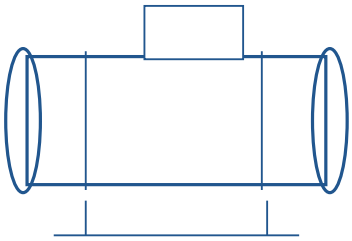

01 / Airflow and configuration

Use the selected model table and complete performance curve. Resolve required flow and pressure together.

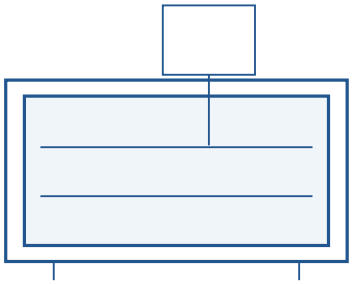

02 / Actual interfaces

Use the selected unit dimensions. Coordinate the duct interfaces, electrical supply and installation orientation.

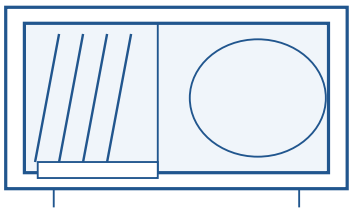

03 / Support and service

Plan access to the fan and motor, and to filters or the drive where fitted. Coordinate the support structure.

Need the complete duty curve?

Use Voltvent Selection Software and the selected technical catalogue.

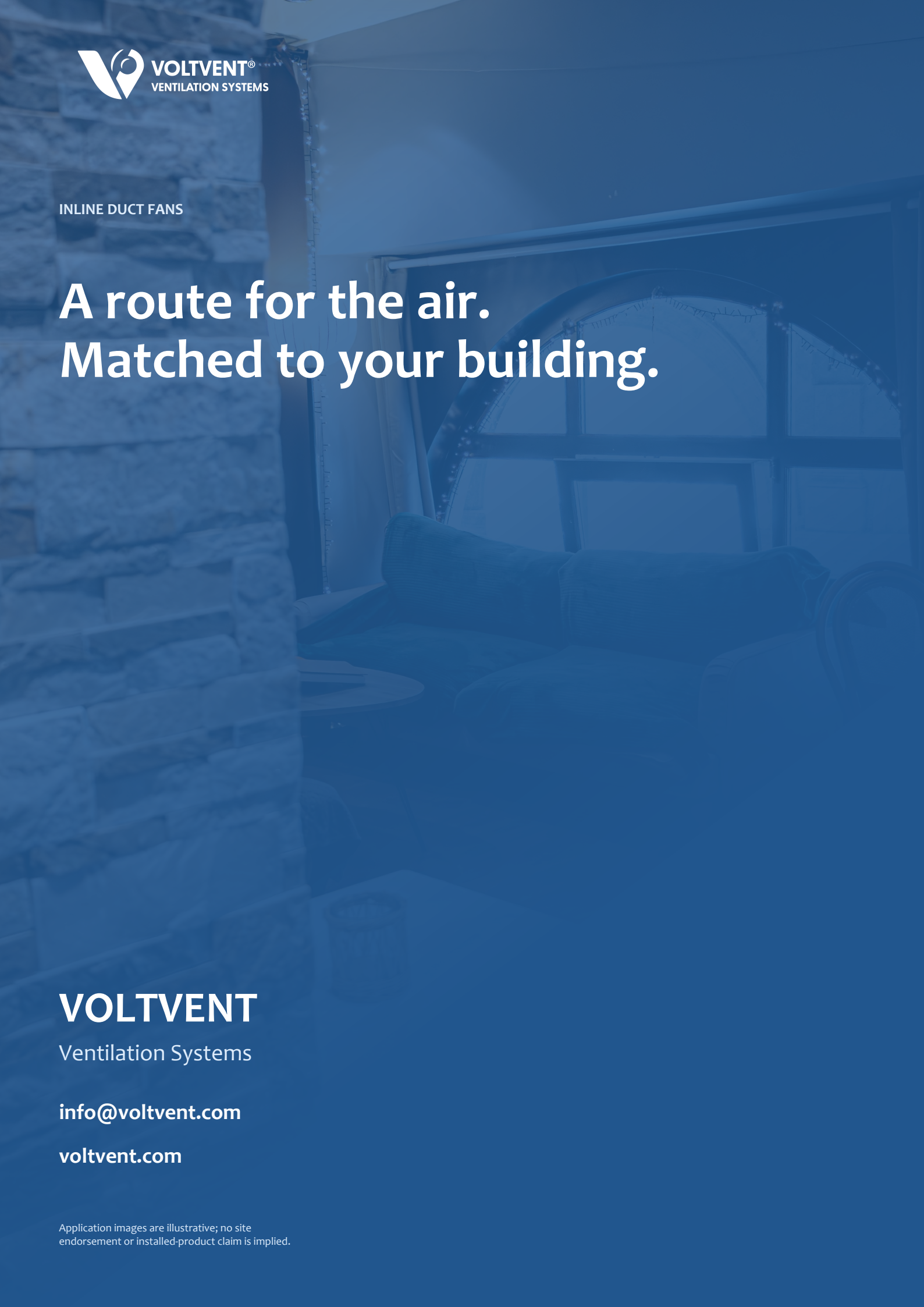

VOLTVENT®
VENTILATION SYSTEMS

INLINE DUCT FANS

A route for the air. Matched to your building.

VOLTVENT

Ventilation Systems

info@voltvent.com

voltvent.com

Application images are illustrative; no site endorsement or installed-product claim is implied.