VOLTVENT®
VENTILATION SYSTEMS

VRF SERIES

Vertical discharge centrifugal roof fans

VRF

DIRECT DRIVE

BACKWARD-CURVED IMPELLER

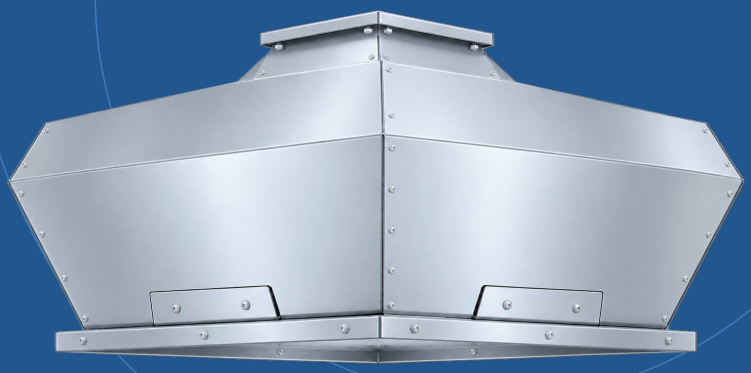

1900-13000
Nominal airflow / m^3/h

13
Models in the range

50 Hz
Single / three phase

info@voltvent.com | voltvent.com

01 / PRODUCT OVERVIEW

Vertical discharge. Direct drive.



01 Upward roof extraction

A vertical-discharge centrifugal roof fan for exhaust applications where horizontal discharge is unsuitable. Mount on a suitable roof curb with clear discharge and service access.

02 Sheet-metal body and centrifugal wheel

A formed sheet-metal casing houses a backward-curved impeller. The approved front-view photograph illustrates the body, top cover, folded panels and mounting frame.

03 Motor outside the transported airstream

Asynchronous motors serve the configurations. Maximum transported air is +120 °C; motor operating range is -20 to +40 °C. Maintain motor ventilation and respect both limits.

MODEL-SPECIFIC RATINGS

Seven casing sizes. Thirteen motor options.

Selection parameter	Series overview
Nominal airflow	1900-13000 m^3/h
Nominal motor power	0.25-3.00 kW
Electrical supply	230 V / 1 phase or 400 V / 3 phase / 50 Hz
Motor configuration	4 or 6 poles / Class F / IP55 / TEFC / IE2
Motor range / maximum transported air	-20 to +40 °C / +120 °C
Sound pressure reference	Listed LpA at 3 m; model-specific

Published series data. Use the selected model outline and actual motor nameplate. The photograph illustrates the series configuration.

02 / TECHNICAL DATA

Compare the fan and motor.

13 MODELS / 50 Hz / NOMINAL RATINGS

Model	Supply V / phase	Airflow m^3/h	Max. Ps Pa	Motor kW	Speed rpm	Current A	Weight kg	LpA / 3 m dB(A)
VRF 315M-4P	230 / 1	1900	285	0.25	1380	2.1	22	48
VRF 315T-4P	400 / 3	1900	285	0.25	1380	0.87	22	48
VRF 355M-4P	230 / 1	2850	350	0.25	1380	2.1	27	50
VRF 355T-4P	400 / 3	2850	350	0.25	1380	0.87	27	50
VRF 400M-4P	230 / 1	4000	480	0.37	1390	3.4	33	51
VRF 400T-4P	400 / 3	4000	480	0.37	1390	1.2	33	51
VRF 450M-4P	230 / 1	5300	530	0.55	1365	4.5	38	54
VRF 450T-4P	400 / 3	5300	530	0.55	1365	1.6	38	54
VRF 500M-4P	230 / 1	8000	690	1.10	1410	7.5	49	56
VRF 500T-4P	400 / 3	8000	690	1.10	1410	2.6	49	56
VRF 560M-4P	230 / 1	10500	880	2.20	1420	14.2	58	65
VRF 560T-4P	400 / 3	10500	880	2.20	1420	4.9	58	65
VRF 630T-6P	400 / 3	13000	550	3.00	960	6.6	70	78

Airflow and maximum static pressure are nominal ratings, not a selected duty point. Power, speed and current are nominal motor values; operating-point values in FSP may differ.

M = single phase; T = three phase. 4P = four poles; 6P = six poles. All listed motors are Class F / IP55 / TEFC / IE2. Motor range is -20 to +40 °C; maximum transported air is +120 °C.

LpA is the independently supplied sound-pressure reference at 3 m. Inlet and housing sound-power bands are listed separately on page 8; no sound-pressure spectrum is inferred.

03 / AIR PERFORMANCE / 1 OF 2

Fan Performance Curves

VRF 315M-4P

230 V / 1 phase / 50 Hz / 0.25 kW

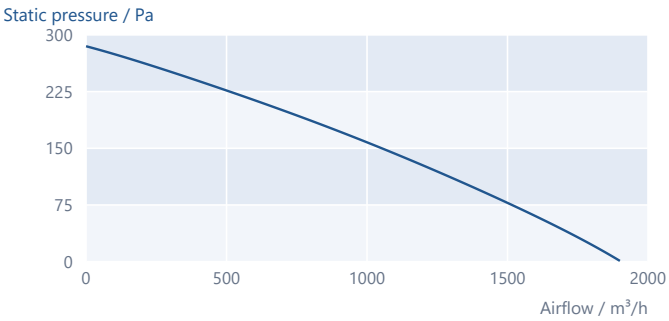

VRF 315T-4P

400 V / 3 phase / 50 Hz / 0.25 kW

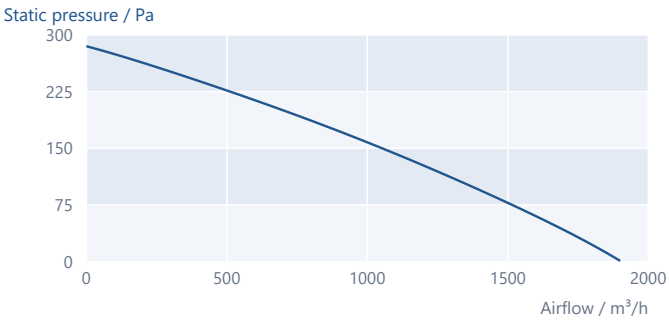

VRF 355M-4P

230 V / 1 phase / 50 Hz / 0.25 kW

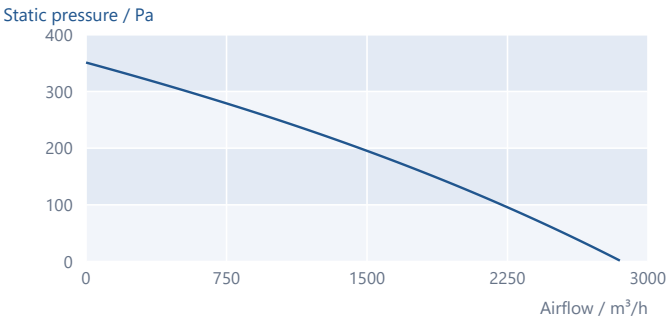

VRF 355T-4P

400 V / 3 phase / 50 Hz / 0.25 kW

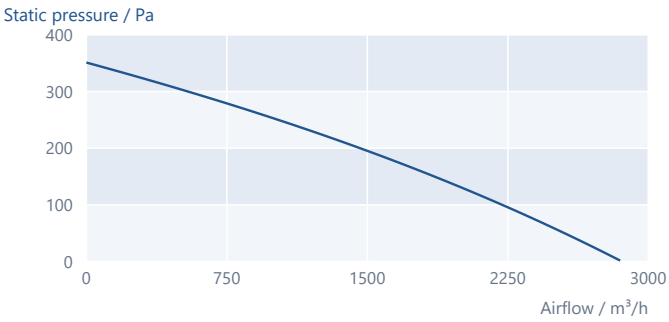

VRF 400M-4P

230 V / 1 phase / 50 Hz / 0.37 kW

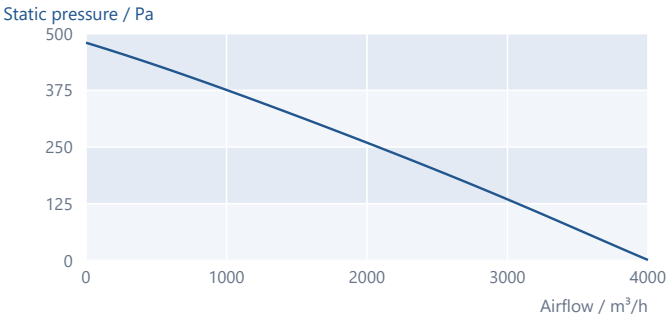

VRF 400T-4P

400 V / 3 phase / 50 Hz / 0.37 kW

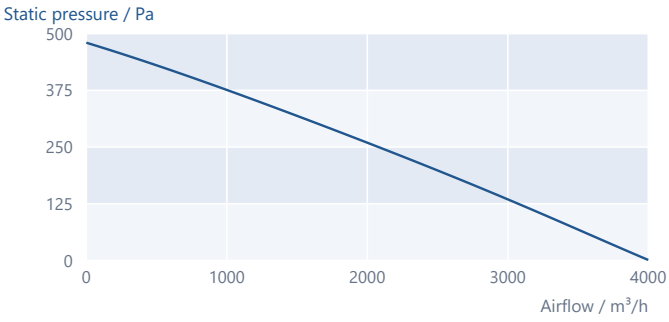

Model-specific scales. Listed 50 Hz curves. VRF 630T-6P stops at zero pressure before its tiny negative fit tail. No extrapolation.

03 / AIR PERFORMANCE / 2 OF 2

Fan Performance Curves

VRF 450M-4P

230 V / 1 phase / 50 Hz / 0.55 kW

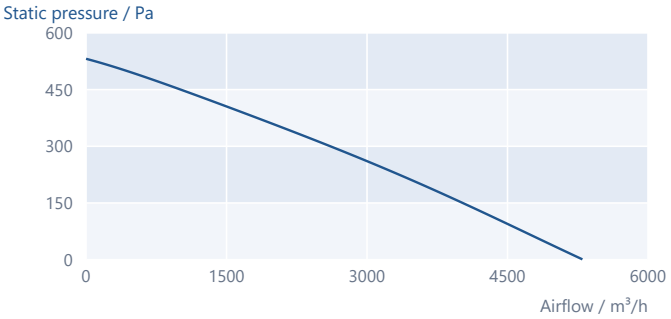

VRF 450T-4P

400 V / 3 phase / 50 Hz / 0.55 kW

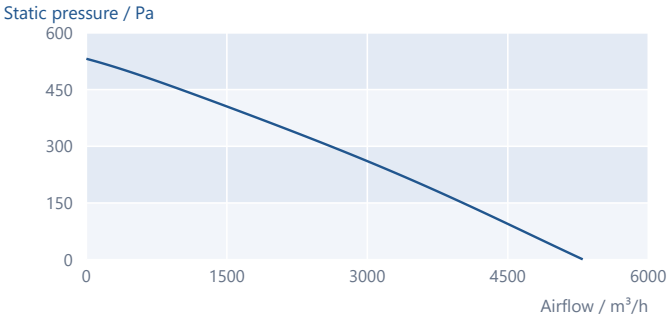

VRF 500M-4P

230 V / 1 phase / 50 Hz / 1.10 kW

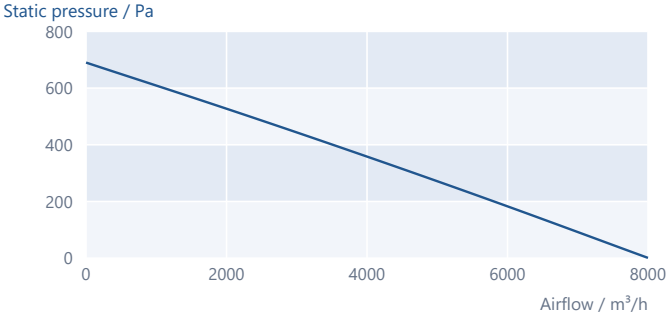

VRF 500T-4P

400 V / 3 phase / 50 Hz / 1.10 kW

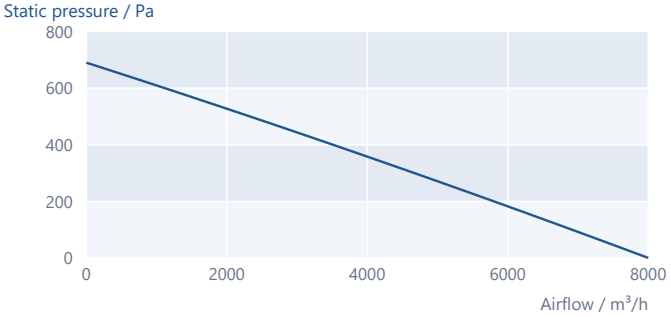

VRF 560M-4P

230 V / 1 phase / 50 Hz / 2.20 kW

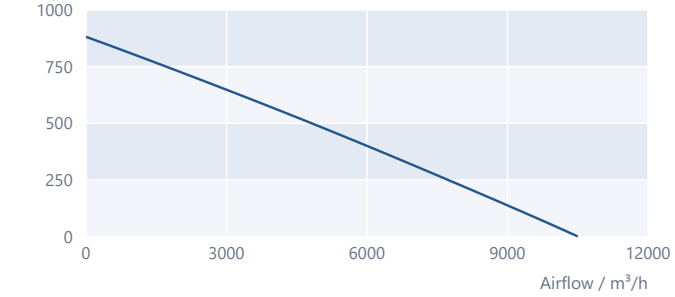

VRF 560T-4P

400 V / 3 phase / 50 Hz / 2.20 kW

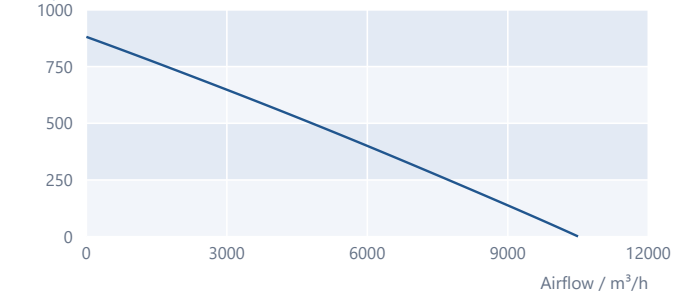

VRF 630T-6P

400 V / 3 phase / 50 Hz / 3.00 kW

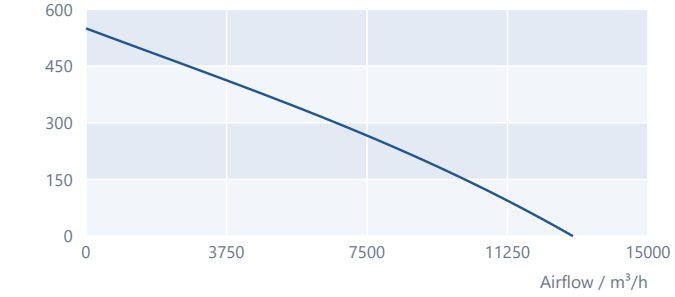

Model-specific scales. Listed 50 Hz curves. VRF 630T-6P stops at zero pressure before its tiny negative fit tail. No extrapolation.

04 / DIMENSIONS

Define the roof connection.

ORIGINAL FAMILY OUTLINE / FRONT & BASE

All dimensions in mm

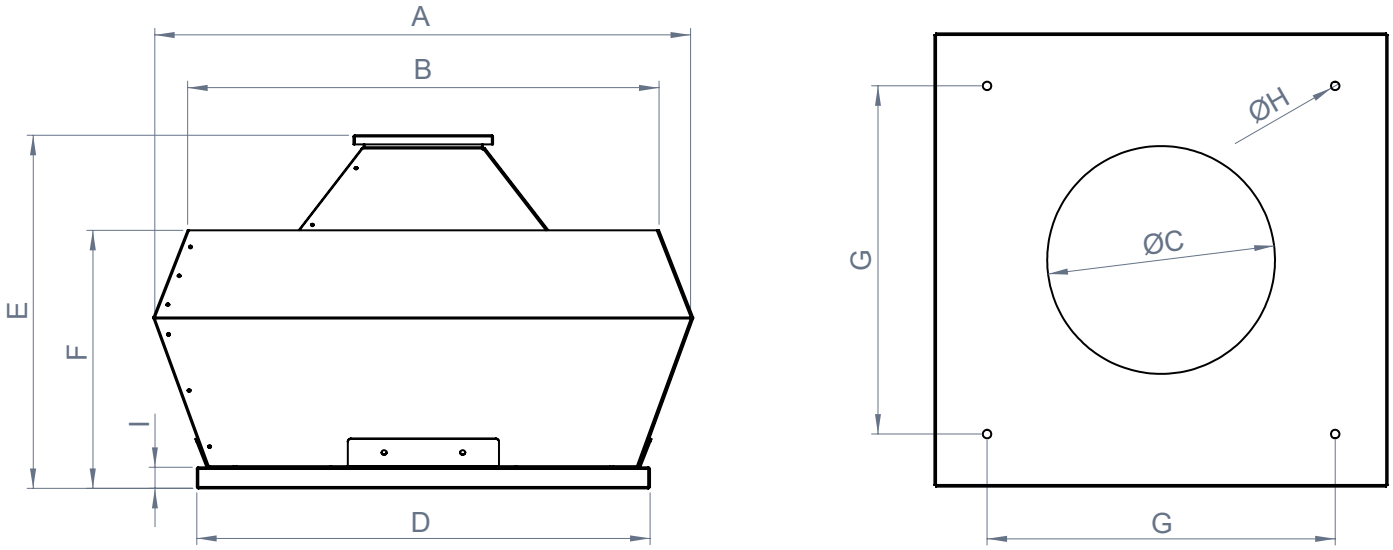

Casing / models	A	B	C	D	E	F	G	H	I
VRF 315M/T-4P	845	740	198	700	550	395	576	14	35
VRF 355M/T-4P	845	740	234	700	550	395	576	14	35
VRF 400M/T-4P	895	780	268	750	585	430	576	14	35
VRF 450M/T-4P	960	855	303	800	595	440	625	14	35
VRF 500M/T-4P	1030	915	342	850	695	490	675	14	35
VRF 560M/T-4P	1195	960	380	950	820	610	740	14	35
VRF 630T-6P	1195	960	650	950	890	620	740	14	35

A/B = housing widths; C = circular connection; D = mounting-base width; E/F = heights in the outline; G = fixing pattern; H = fixing-hole diameter; I = base height. M/T versions share listed dimensions. Use actual mating flanges; do not scale the drawing.

05 / INSTALLATION & MOTOR

Prepare the roof and the supply.

ROOF CURB, SEALING & SERVICE ACCESS

Mount on a suitable rigid roof curb, seal the roof connection and keep the upward discharge and motor ventilation clear. Provide service access and secure supports. Motor range is -20 to +40 °C; maximum transported air is +120 °C.

SUPPLY & SPEED CONTROL

Three-phase inverter control is specified for this family. Use a motor-compatible controller and follow the actual motor/controller instructions. No fixed control range is inferred. Isolate power before inspection.

MODEL-SPECIFIC REFERENCES / CLASS F / IP55 / TEFC / IE2

Model	Poles	Motor range °C	Max. air °C	Capacitor µF	Capacitor rating / V
VRF 315M-4P	4	-20 / +40	+120	10	400
VRF 315T-4P	4	-20 / +40	+120	-	-
VRF 355M-4P	4	-20 / +40	+120	10	400
VRF 355T-4P	4	-20 / +40	+120	-	-
VRF 400M-4P	4	-20 / +40	+120	15	400
VRF 400T-4P	4	-20 / +40	+120	-	-
VRF 450M-4P	4	-20 / +40	+120	20	400
VRF 450T-4P	4	-20 / +40	+120	-	-
VRF 500M-4P	4	-20 / +40	+120	35	400
VRF 500T-4P	4	-20 / +40	+120	-	-
VRF 560M-4P	4	-20 / +40	+120	50	400
VRF 560T-4P	4	-20 / +40	+120	-	-
VRF 630T-6P	6	-20 / +40	+120	-	-

The capacitor voltage is the component rating, not the fan supply voltage. Match the selected motor nameplate and the supplied diagram on page 9. Respect both motor and transported-air temperature limits.

06 / ACOUSTIC REFERENCE

Sound power, by model.

INLET & HOUSING BAND LEVELS / dB

Model	Listed	65 Hz	125 Hz	250 Hz	500 Hz	1 kHz	2 kHz	4 kHz	8 kHz	LwA dB(A)
VRF 315M-4P	Inlet	40	58	62	64	63	60	55	48	69
VRF 315M-4P	Housing	42	60	64	66	65	62	57	50	71
VRF 315T-4P	Inlet	40	58	62	64	63	60	55	48	69
VRF 315T-4P	Housing	42	60	64	66	65	62	57	50	71
VRF 355M-4P	Inlet	42	60	64	66	65	62	57	50	71
VRF 355M-4P	Housing	44	62	66	68	67	64	59	52	72
VRF 355T-4P	Inlet	42	60	64	66	65	62	57	50	71
VRF 355T-4P	Housing	44	62	66	68	67	64	59	52	72
VRF 400M-4P	Inlet	59	61	65	67	66	63	58	51	72
VRF 400M-4P	Housing	61	63	67	69	68	65	60	53	74
VRF 400T-4P	Inlet	59	61	65	67	66	63	58	51	72
VRF 400T-4P	Housing	61	63	67	69	68	65	60	53	74
VRF 450M-4P	Inlet	62	64	68	70	69	66	61	54	75
VRF 450M-4P	Housing	64	66	70	72	71	68	63	56	77
VRF 450T-4P	Inlet	62	64	68	70	69	66	61	54	75
VRF 450T-4P	Housing	64	66	70	72	71	68	63	56	77
VRF 500M-4P	Inlet	59	61	65	67	66	63	58	51	72
VRF 500M-4P	Housing	66	68	73	74	73	70	65	58	79
VRF 500T-4P	Inlet	59	61	65	67	66	63	58	51	72
VRF 500T-4P	Housing	66	68	73	74	73	70	65	58	79
VRF 560M-4P	Inlet	73	75	79	81	80	77	72	65	86
VRF 560M-4P	Housing	75	77	81	83	82	79	74	67	88
VRF 560T-4P	Inlet	73	75	79	81	80	77	72	65	86
VRF 560T-4P	Housing	75	77	81	83	82	79	74	67	88
VRF 630T-6P	Inlet	73	75	79	81	80	77	72	65	86
VRF 630T-6P	Housing	75	77	81	83	82	79	74	67	88

Inlet and housing sound-power bands and totals are selection datas. The original 65 Hz label is retained. Blank outlet spectra and placeholder totals are excluded.

LpA at 3 m is supplied independently on page 3. No pressure spectrum, installation correction or LwA/LpA conversion is inferred.

07 / ELECTRICAL CONNECTION

Match the motor connection.

VRF M / SINGLE-PHASE MODELS 315-560

Layout 18 / 230 V / 50 Hz

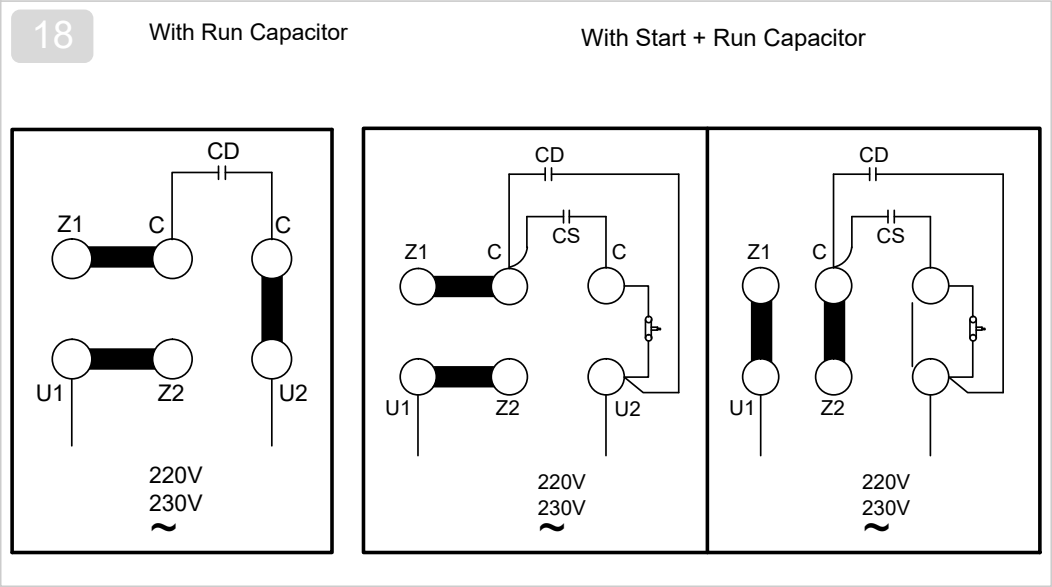

VRF T / THREE-PHASE MODELS 315-630

Layout 19 / 400 V / 50 Hz

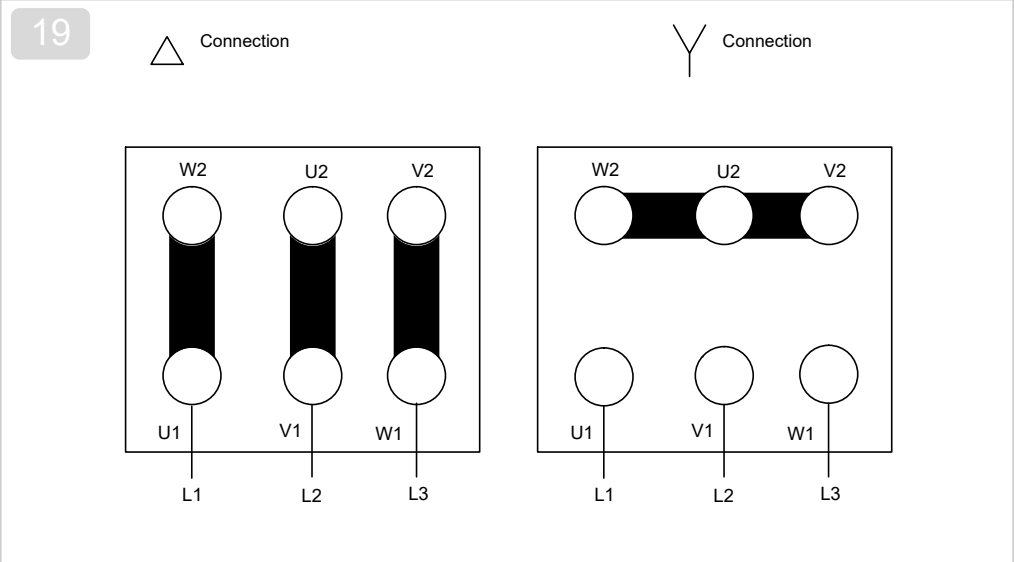

The diagrams preserve the supplied terminal, capacitor and bridge arrangements. The actual motor nameplate and supplied diagram determine the applicable connection.

Use the selected motor capacitor rating, protection and rotation check. These references are not complete application control-panel designs.

VRF

Vertical discharge centrifugal roof fans



info@voltvent.com | voltvent.com