VOLTVENT®
VENTILATION SYSTEMS

VENTILATION ACCESSORIES

Grilles & diffusers

ROOM AIR TERMINALS / TEN SERIES



VPDV



VCD-S



VCD-R



VDDG



VSDG



VLG



VDTG



VLSD

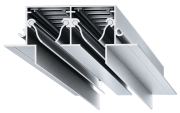

VLG-H

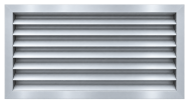

VAWL

Air distribution. In detail.

Technical catalogue

Nominal sizes & installation interfaces

EN / V1 / REVIEW

01 / PRODUCT INDEX

Ten series. One coordinated range.

Find the terminal format, then coordinate the nominal size, installation interface and selected air duty.



VPDV

Plastic disc valve

04 / 05



VLG

Linear grille

14 / 15



VCD-S

Square ceiling diffuser

06 / 07

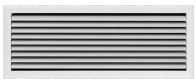

VDTG

Door transfer grille

16 / 17



VCD-R

Round ceiling diffuser

08 / 09



VLSD

Linear slot diffuser

18 / 19

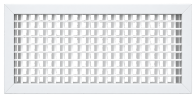

VDDG

Double deflection grille

10 / 11

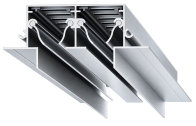

VLG-H

Hidden linear slot diffuser

20 / 21



VSDG

Single deflection grille

12 / 13

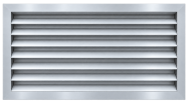

VAWL

Weather louvre

22 / 23

Listed pages: size schedule / installation example. Product illustrations identify format and interfaces; they do not restrict compatibility to named fan models.

02 / SELECTION OVERVIEW

Start with the air path.

Select the terminal function and architectural interface before choosing the final size and operating point.

Air path	Terminal series	Coordinate
Ceiling distribution	VCD-S / VCD-R	Neck, face, ceiling opening and selected air pattern.
Circular terminal	VPDV	Duct diameter, disc setting and room duty.
Grille opening	VDDG / VSDG / VLG	Blade arrangement, frame, opening and access.
Transfer air	VDTG	Pressure relationship, door construction and clear air path.
Linear ceiling line	VLSD / VLG-H	Slot count, length, ceiling detail and plenum.
Exterior opening	VAWL	Air duty, facade joint, drainage, support and weather evidence.

Nominal neck sizes are selection references. They are not outside face sizes, finished opening dimensions, free areas or airflow ratings. Use the offered product drawing and performance data for the selected duty.

Application views are dimensionless installation examples. Confirm the actual assembly; no exclusive fan-model match is implied.

VPDV / SIZE SCHEDULE

VPDV

Plastic disc valve



Nominal connection key / not to scale

A compact circular terminal with a central disc and an annular air passage. Coordinate the selected air duty with the duct connection and accessible face.

4 listed nominal options



Nominal neck Ø

Code	Nominal neck Ø / mm
VPDV	100
VPDV	125
VPDV	150
VPDV	200

Nominal duct connection diameter is listed. Confirm the outside face diameter, neck engagement and disc setting for the selected unit.

VPDV / INSTALLATION EXAMPLE

Ceiling terminal example

Illustrative arrangement only. Coordinate the selected terminal, connection and installation requirements.

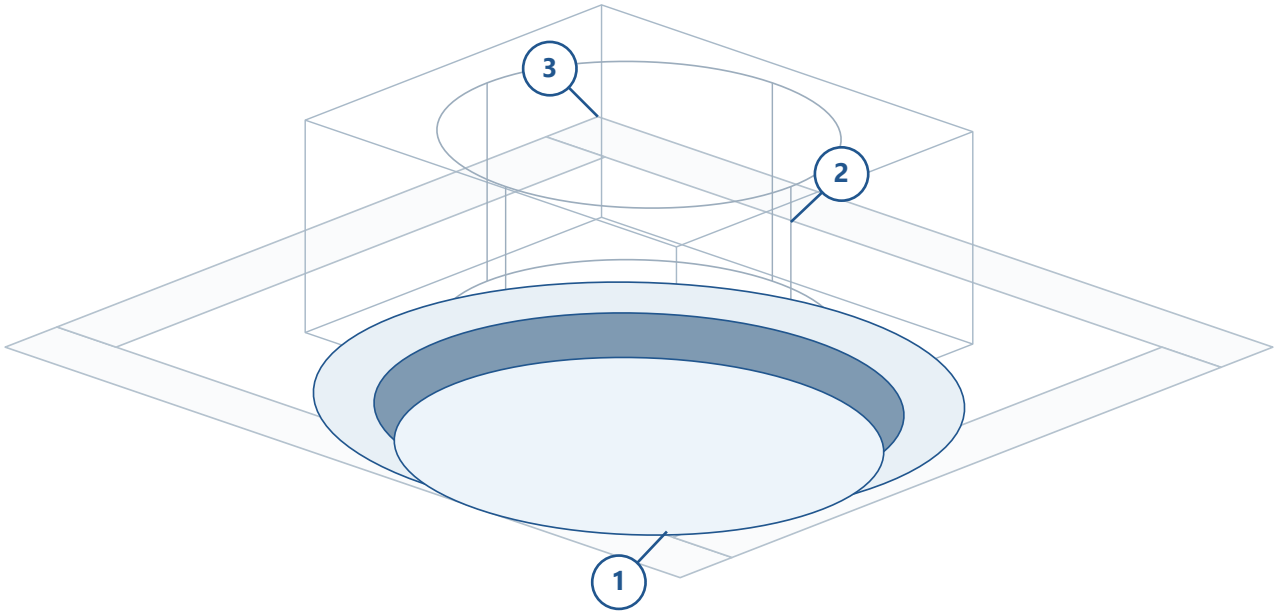

01 / Disc and annular passage

Keep the visible air passage clear. Set and check the selected terminal during commissioning.

02 / Circular connection

Coordinate the mating duct or mounting ring with the actual neck and fixing detail.

03 / Ceiling junction

Confirm the opening, ceiling finish and access for removal and cleaning.



INTERFACE & SERVICE

Confirm the offered fixing, sealing and access arrangement. Supporting construction is installation context and is selected separately from the visible terminal.

Not to scale. The illustration does not establish manufacturing dimensions, airflow, sound or classification.

VCD-S / SIZE SCHEDULE

VCD-S

Square ceiling diffuser

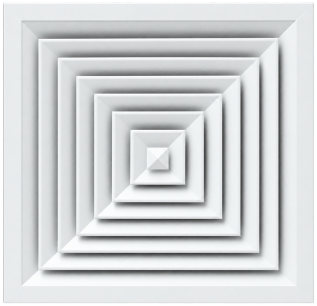

A square terminal face with concentric blade elements for ceiling air distribution. Coordinate the selected airflow pattern with the room layout and ceiling system.

6 listed nominal options

Nominal connection key / not to scale

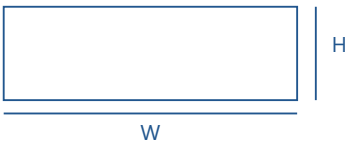

Code	Nominal neck W / mm	Nominal neck H / mm
VCD-S	150	150
VCD-S	225	225
VCD-S	300	300
VCD-S	375	375
VCD-S	450	450
VCD-S	525	525

The listed W x H describes the square neck, not the outside face or ceiling cut-out. Confirm the frame and plenum connection.

VCD-S / INSTALLATION EXAMPLE

Square ceiling installation

Illustrative arrangement only. Coordinate the selected terminal, connection and installation requirements.

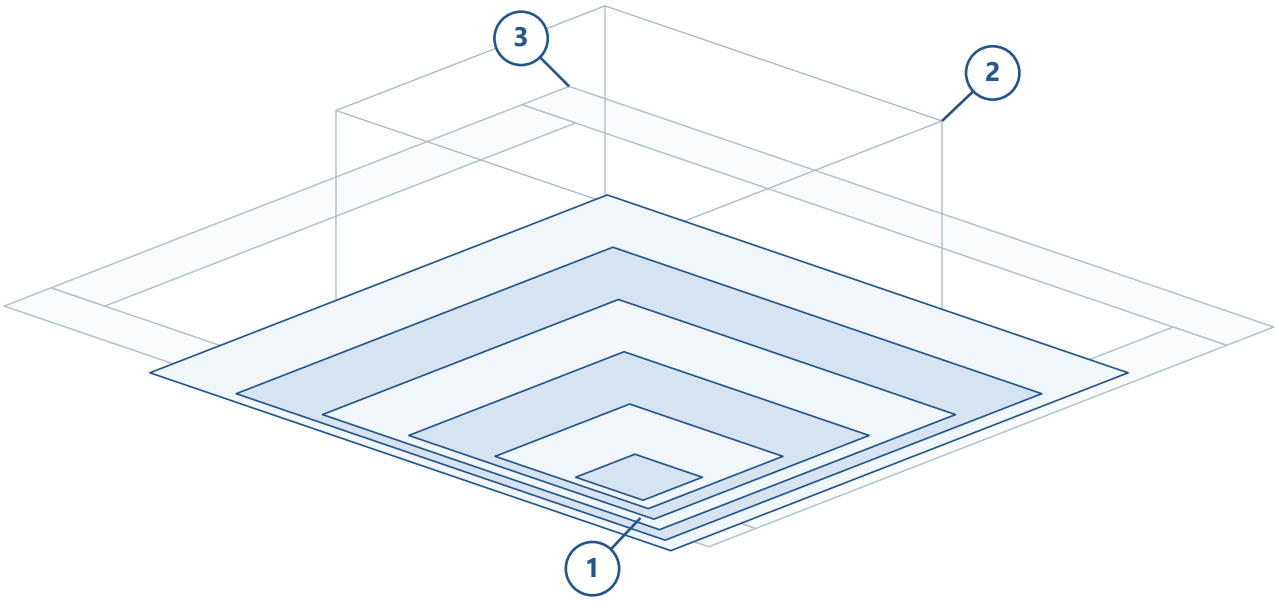

01 / Concentric face

The square face is shown with its concentric elements. Confirm the selected air pattern and access.

02 / Neck and plenum

Coordinate the nominal square neck with the selected plenum or duct connection.

03 / Ceiling interface

Support the selected assembly independently as required; coordinate the ceiling opening and finish.



INTERFACE & SERVICE

Confirm the offered fixing, sealing and access arrangement. Supporting construction is installation context and is selected separately from the visible terminal.

Not to scale. The illustration does not establish manufacturing dimensions, airflow, sound or classification.

VCD-R / SIZE SCHEDULE

VCD-R

Round ceiling diffuser



Nominal connection key / not to scale

A circular terminal with concentric face elements for room air distribution. Select the duty and installation arrangement together with the ceiling or exposed duct route.

10 listed nominal options



Nominal neck Ø

Code	Nominal neck Ø / mm
VCD-R	100
VCD-R	150
VCD-R	200
VCD-R	250
VCD-R	300
VCD-R	350
VCD-R	400
VCD-R	450
VCD-R	500
VCD-R	550

Nominal neck diameter is listed. Face diameter, cone arrangement, neck depth and fixing details require the selected drawing.

VCD-R / INSTALLATION EXAMPLE

Circular ceiling installation

Illustrative arrangement only. Coordinate the selected terminal, connection and installation requirements.

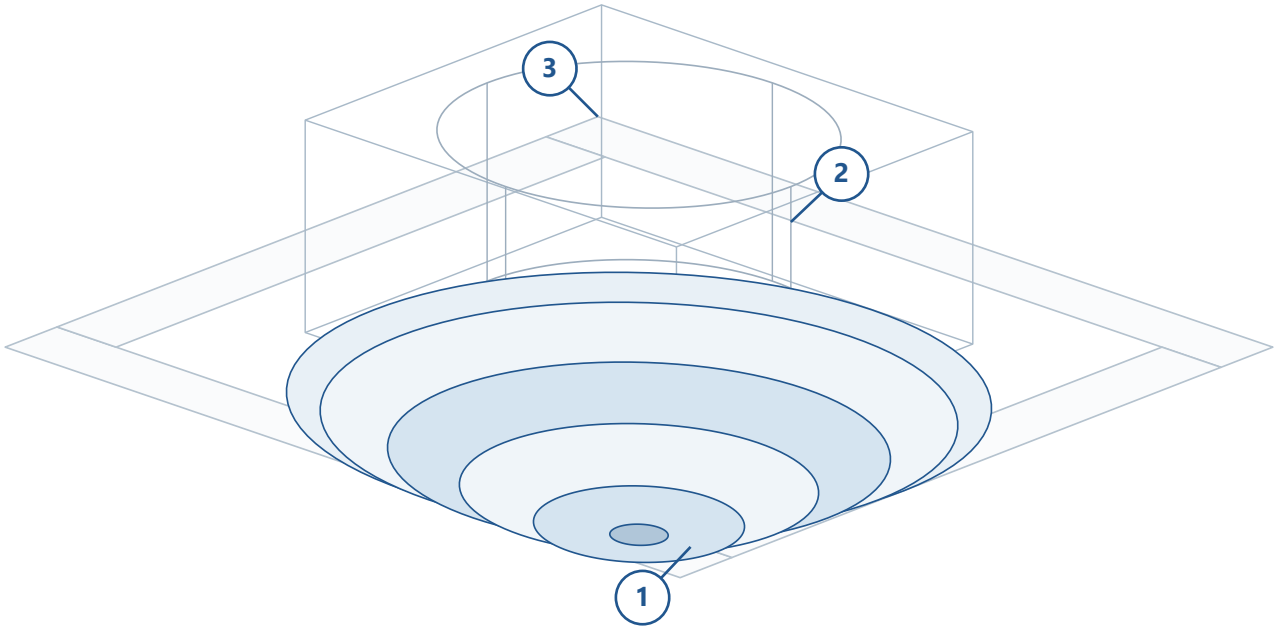

01 / Concentric face

Keep the discharge passages clear and accessible for inspection and cleaning.

02 / Duct connection

Match the actual neck geometry and joint. Coordinate any separately selected plenum.

03 / Surrounding ceiling

The ceiling is shown as context. Confirm the finished opening and the selected support arrangement.



INTERFACE & SERVICE

Confirm the offered fixing, sealing and access arrangement. Supporting construction is installation context and is selected separately from the visible terminal.

Not to scale. The illustration does not establish manufacturing dimensions, airflow, sound or classification.

VDDG / SIZE SCHEDULE

VDDG

Double deflection grille

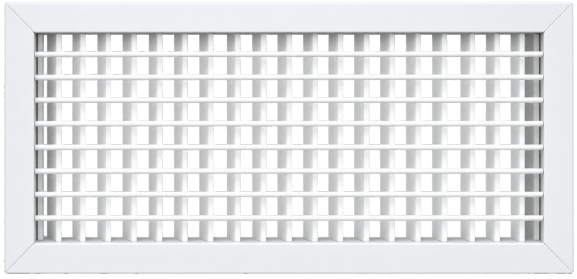

A rectangular grille with two blade rows for air-direction control. Coordinate blade orientation and adjustment access with the supply route and occupied space.

209 listed nominal options

Nominal connection key / not to scale

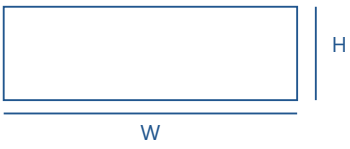

W / H	100	150	200	250	300	350	400	450	500	550	600
100	•	•	•	•	•	•	•	•	•	•	•
150	•	•	•	•	•	•	•	•	•	•	•
200	•	•	•	•	•	•	•	•	•	•	•
250	•	•	•	•	•	•	•	•	•	•	•
300	•	•	•	•	•	•	•	•	•	•	•
350	•	•	•	•	•	•	•	•	•	•	•
400	•	•	•	•	•	•	•	•	•	•	•
450	•	•	•	•	•	•	•	•	•	•	•
500	•	•	•	•	•	•	•	•	•	•	•
550	•	•	•	•	•	•	•	•	•	•	•
600	•	•	•	•	•	•	•	•	•	•	•
650	•	•	•	•	•	•	•	•	•	•	•
700	•	•	•	•	•	•	•	•	•	•	•
750	•	•	•	•	•	•	•	•	•	•	•
800	•	•	•	•	•	•	•	•	•	•	•
850	•	•	•	•	•	•	•	•	•	•	•
900	•	•	•	•	•	•	•	•	•	•	•
950	•	•	•	•	•	•	•	•	•	•	•
1000	•	•	•	•	•	•	•	•	•	•	•

All dimensions in mm. • = listed nominal neck W x H combination.

Nominal neck W x H is listed. Outside frame, core depth, blade spacing and any separately selected damper require confirmation.

VDDG / INSTALLATION EXAMPLE

Wall grille installation

Illustrative arrangement only. Coordinate the selected terminal, connection and installation requirements.

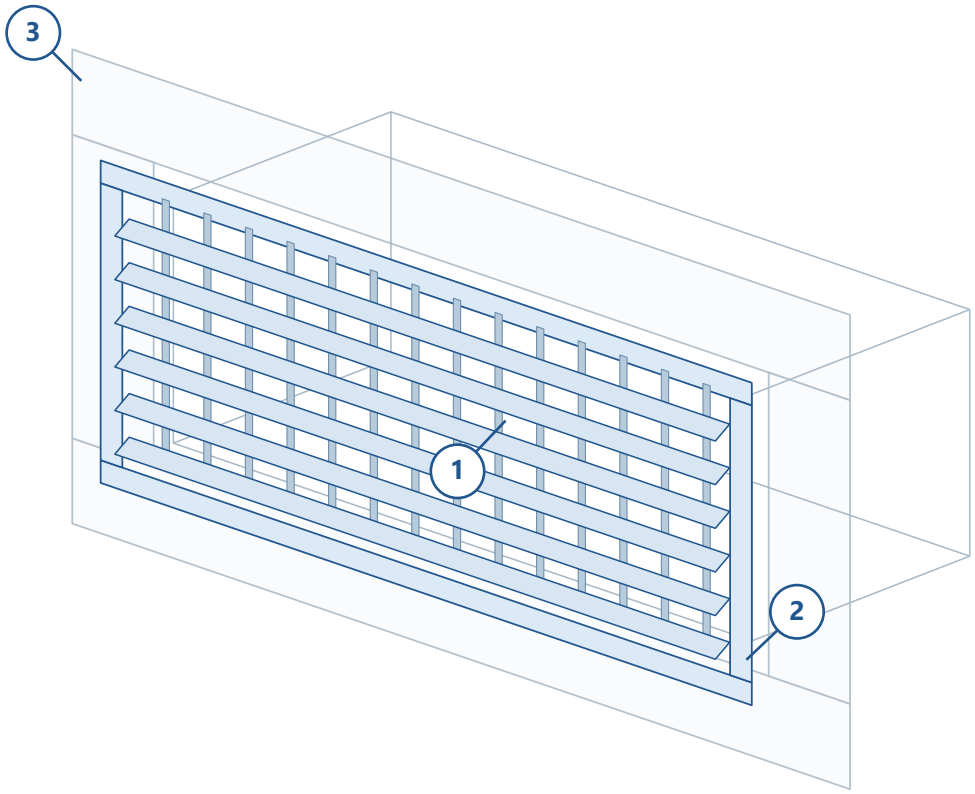

01 / Two blade rows

The illustrated rows show direction control in two planes. Confirm the actual blade setting.

02 / Grille-to-opening joint

Coordinate the nominal neck, subframe or fixing method, sealing and removable-face access.

03 / Duct and wall context

Keep the duct connection and support clear of blade travel. The surrounding wall is schematic.

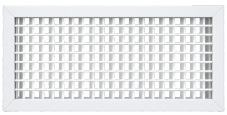

INTERFACE & SERVICE

Confirm the offered fixing, sealing and access arrangement. Supporting construction is installation context and is selected separately from the visible terminal.

Not to scale. The illustration does not establish manufacturing dimensions, airflow, sound or classification.

VSDG / SIZE SCHEDULE

VSDG

Single deflection grille

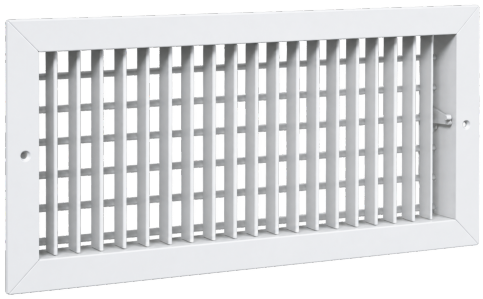

A rectangular terminal with one visible blade row. Coordinate the selected airflow direction and the supply or return arrangement with the room and duct layout.

209 listed nominal options

Nominal connection key / not to scale

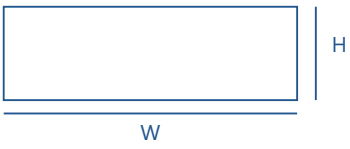

W / H	100	150	200	250	300	350	400	450	500	550	600
100	•	•	•	•	•	•	•	•	•	•	•
150	•	•	•	•	•	•	•	•	•	•	•
200	•	•	•	•	•	•	•	•	•	•	•
250	•	•	•	•	•	•	•	•	•	•	•
300	•	•	•	•	•	•	•	•	•	•	•
350	•	•	•	•	•	•	•	•	•	•	•
400	•	•	•	•	•	•	•	•	•	•	•
450	•	•	•	•	•	•	•	•	•	•	•
500	•	•	•	•	•	•	•	•	•	•	•
550	•	•	•	•	•	•	•	•	•	•	•
600	•	•	•	•	•	•	•	•	•	•	•
650	•	•	•	•	•	•	•	•	•	•	•
700	•	•	•	•	•	•	•	•	•	•	•
750	•	•	•	•	•	•	•	•	•	•	•
800	•	•	•	•	•	•	•	•	•	•	•
850	•	•	•	•	•	•	•	•	•	•	•
900	•	•	•	•	•	•	•	•	•	•	•
950	•	•	•	•	•	•	•	•	•	•	•
1000	•	•	•	•	•	•	•	•	•	•	•

All dimensions in mm. • = listed nominal neck W x H combination.

Nominal neck W x H is listed. Confirm the actual frame, blade orientation, fixing and any required air-volume control separately.

VSDG / INSTALLATION EXAMPLE

Single-row grille installation

Illustrative arrangement only. Coordinate the selected terminal, connection and installation requirements.

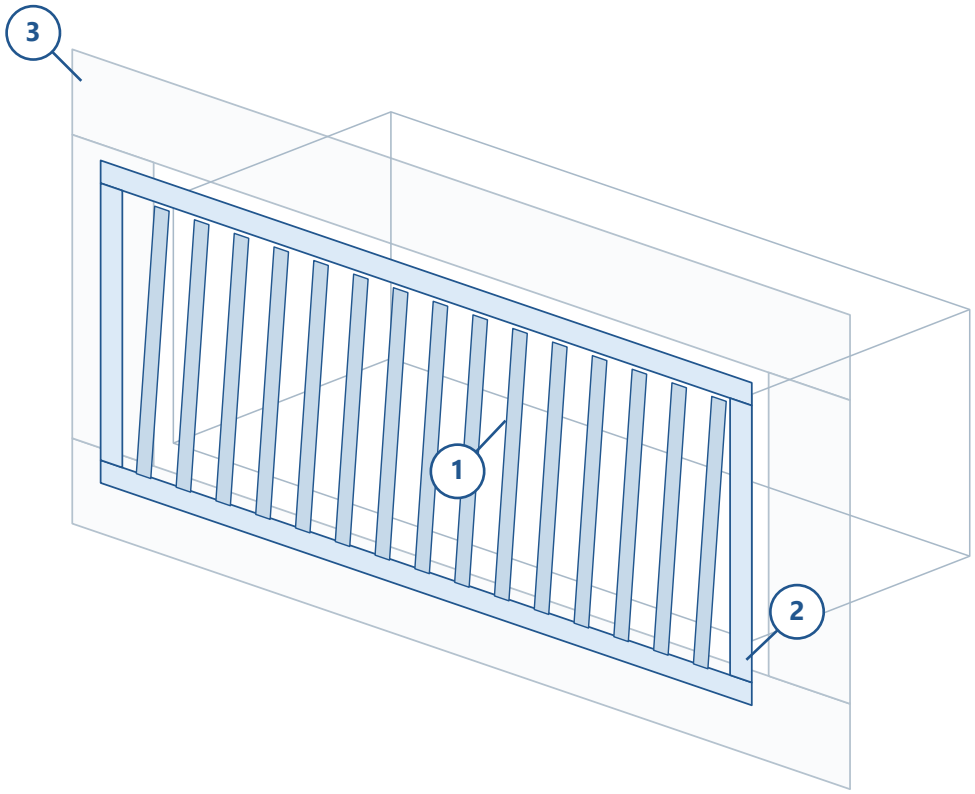

01 / Single blade row

The visible blade row is shown in the selected product direction. Coordinate access and setting.

02 / Frame interface

Confirm neck size, frame envelope, sealing and the offered fixing arrangement.

03 / Duct and wall context

Coordinate duct support and the wall opening. Blade direction alone does not define airflow volume.



INTERFACE & SERVICE

Confirm the offered fixing, sealing and access arrangement. Supporting construction is installation context and is selected separately from the visible terminal.

Not to scale. The illustration does not establish manufacturing dimensions, airflow, sound or classification.

VLG / SIZE SCHEDULE

VLG

Linear grille



A linear bar face for integration into architectural ventilation openings. Coordinate the air route and blade orientation with the surrounding wall or ceiling finish.

228 listed nominal options

Nominal connection key / not to scale

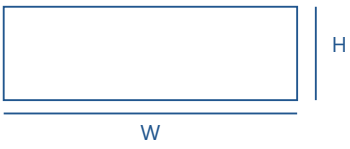

W / H	75	100	150	200	250	300	350	400	450	500	550	600
150	•	•	•	•	•	•	•	•	•	•	•	•
200	•	•	•	•	•	•	•	•	•	•	•	•
250	•	•	•	•	•	•	•	•	•	•	•	•
300	•	•	•	•	•	•	•	•	•	•	•	•
350	•	•	•	•	•	•	•	•	•	•	•	•
400	•	•	•	•	•	•	•	•	•	•	•	•
450	•	•	•	•	•	•	•	•	•	•	•	•
500	•	•	•	•	•	•	•	•	•	•	•	•
550	•	•	•	•	•	•	•	•	•	•	•	•
600	•	•	•	•	•	•	•	•	•	•	•	•
700	•	•	•	•	•	•	•	•	•	•	•	•
800	•	•	•	•	•	•	•	•	•	•	•	•
900	•	•	•	•	•	•	•	•	•	•	•	•
1000	•	•	•	•	•	•	•	•	•	•	•	•
1200	•	•	•	•	•	•	•	•	•	•	•	•
1400	•	•	•	•	•	•	•	•	•	•	•	•
1600	•	•	•	•	•	•	•	•	•	•	•	•
1800	•	•	•	•	•	•	•	•	•	•	•	•
2000	•	•	•	•	•	•	•	•	•	•	•	•

All dimensions in mm. • = listed nominal neck W x H combination.

Nominal neck W x H is listed. Overall frame dimensions, bar pitch, end treatment and any continuous-run joint are selected separately.

VLG / INSTALLATION EXAMPLE

Linear grille installation

Illustrative arrangement only. Coordinate the selected terminal, connection and installation requirements.

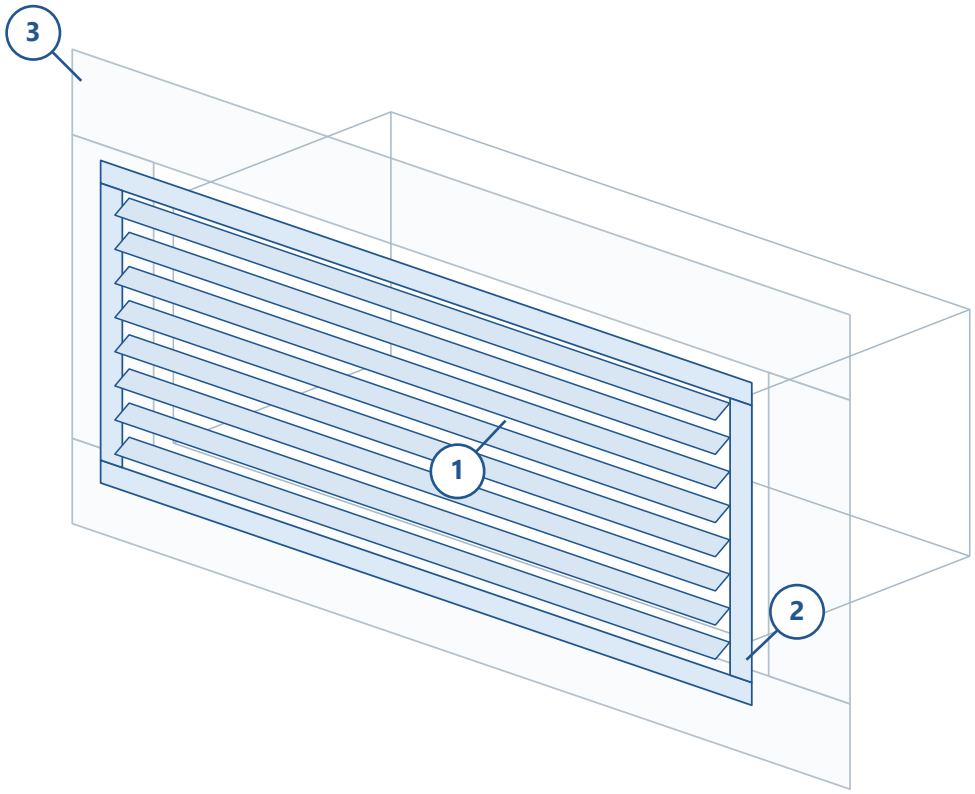

01 / Linear bar face

Preserve the visible bar alignment with the architectural layout and the selected air duty.

02 / Frame and opening

Coordinate the nominal opening, actual fixing method and access for cleaning.

03 / Air route behind grille

Match any plenum, transition and duct connection to the selected grille assembly.



INTERFACE & SERVICE

Confirm the offered fixing, sealing and access arrangement. Supporting construction is installation context and is selected separately from the visible terminal.

Not to scale. The illustration does not establish manufacturing dimensions, airflow, sound or classification.

VDTG / SIZE SCHEDULE

VDTG

Door transfer grille

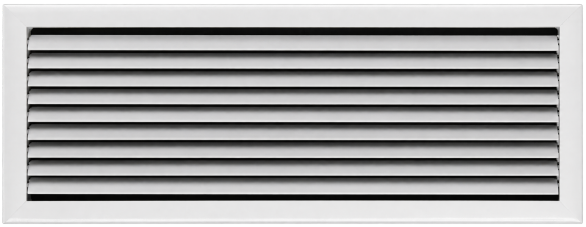

A terminal for the transfer-air path between adjacent spaces. Coordinate the required pressure relationship and the actual door or partition construction.

285 listed nominal options

Nominal connection key / not to scale

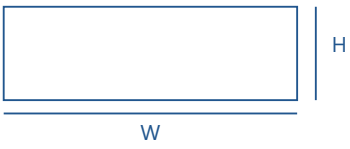

W / H	100	150	200	250	300	350	400	450	500	550	600	650	700	750	800
200	•	•	•	•	•	•	•	•	•	•	•	•	•	•	•
250	•	•	•	•	•	•	•	•	•	•	•	•	•	•	•
300	•	•	•	•	•	•	•	•	•	•	•	•	•	•	•
350	•	•	•	•	•	•	•	•	•	•	•	•	•	•	•
400	•	•	•	•	•	•	•	•	•	•	•	•	•	•	•
450	•	•	•	•	•	•	•	•	•	•	•	•	•	•	•
500	•	•	•	•	•	•	•	•	•	•	•	•	•	•	•
550	•	•	•	•	•	•	•	•	•	•	•	•	•	•	•
600	•	•	•	•	•	•	•	•	•	•	•	•	•	•	•
650	•	•	•	•	•	•	•	•	•	•	•	•	•	•	•
700	•	•	•	•	•	•	•	•	•	•	•	•	•	•	•
750	•	•	•	•	•	•	•	•	•	•	•	•	•	•	•
800	•	•	•	•	•	•	•	•	•	•	•	•	•	•	•
850	•	•	•	•	•	•	•	•	•	•	•	•	•	•	•
900	•	•	•	•	•	•	•	•	•	•	•	•	•	•	•
950	•	•	•	•	•	•	•	•	•	•	•	•	•	•	•
1000	•	•	•	•	•	•	•	•	•	•	•	•	•	•	•
1100	•	•	•	•	•	•	•	•	•	•	•	•	•	•	•
1200	•	•	•	•	•	•	•	•	•	•	•	•	•	•	•

All dimensions in mm. • = listed nominal neck W x H combination.

Nominal neck W x H is listed. Door cut-out, frame overlap, opposing face and permitted panel thickness require the selected drawing.

VDTG / INSTALLATION EXAMPLE

Door transfer installation

Illustrative arrangement only. Coordinate the selected terminal, connection and installation requirements.

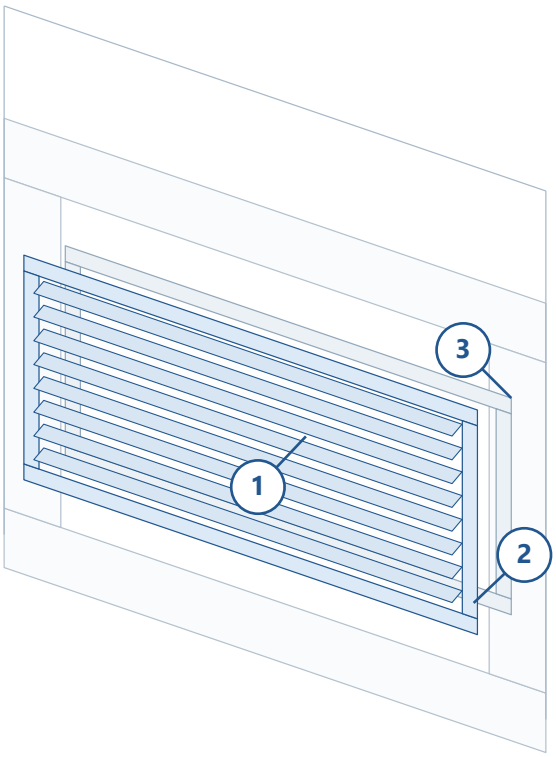

01 / Transfer-air face

Keep both faces free of obstruction and coordinate the transfer-air duty with room pressure requirements.

02 / Frame and door opening

Confirm the cut-out and fixing with the actual door construction and available frame overlap.

03 / Opposing-side interface

Coordinate the complete frame set and access. No fire, smoke or acoustic rating is inferred from this view.

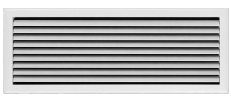

INTERFACE & SERVICE

Confirm the offered fixing, sealing and access arrangement. Supporting construction is installation context and is selected separately from the visible terminal.

Not to scale. The illustration does not establish manufacturing dimensions, airflow, sound or classification.

VLSD / SIZE SCHEDULE

VLSD

Linear slot diffuser



A linear air terminal with a visible slot face for integration into a ceiling line. Coordinate the number of slots and the selected air pattern with the room duty.

4 listed nominal options

Nominal connection key / not to scale



Nominal L / slot count selected

Code	Slots	Nominal L / mm
VLSD	1	1000
VLSD	2	1000
VLSD	3	1000
VLSD	4	1000

The schedule lists 1 to 4 slots at a nominal length of 1000 mm. Slot width, total face width, end caps and plenum dimensions are selected separately.

VLSD / INSTALLATION EXAMPLE

Linear slot ceiling installation

Illustrative arrangement only. Coordinate the selected terminal, connection and installation requirements.

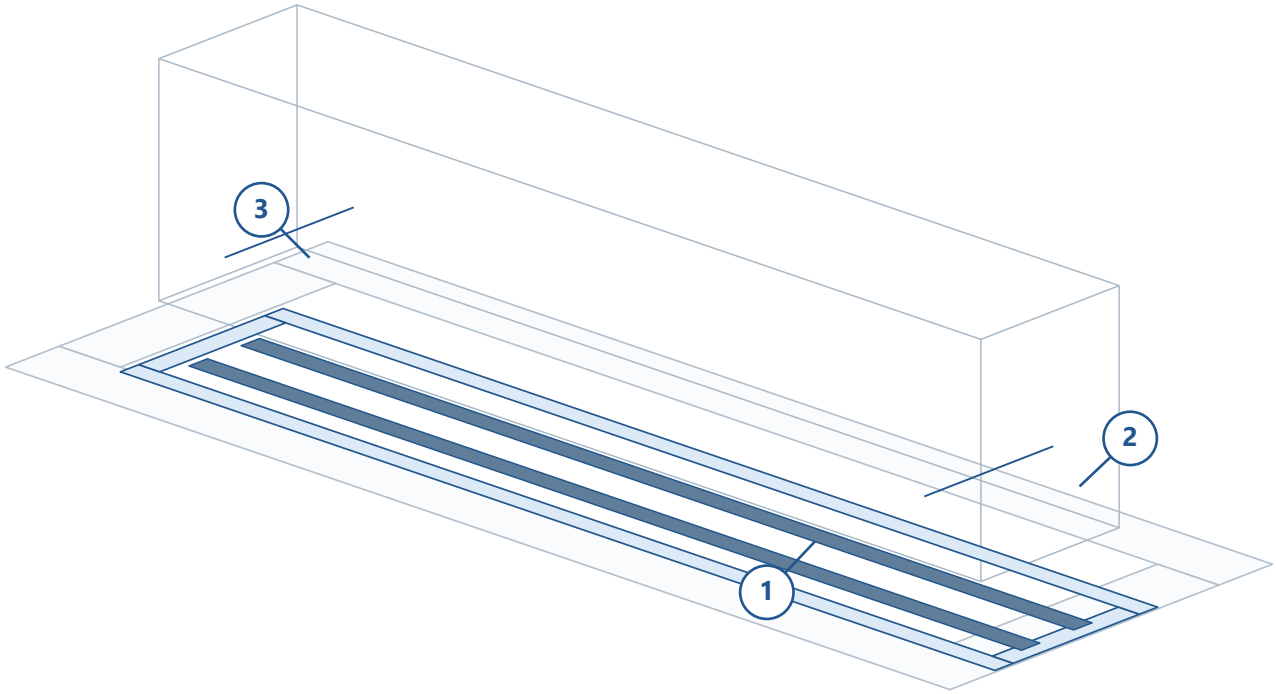

01 / Visible slot line

Two slots are illustrated as an example. Select the slot count and air pattern for the project.

02 / Plenum interface

Coordinate the terminal-to-plenum joint, support and any selected adjustment mechanism.

03 / Ceiling opening

Match the finished ceiling line, access and end treatment; do not carry duct loads on the decorative face.

INTERFACE & SERVICE

Confirm the offered fixing, sealing and access arrangement. Supporting construction is installation context and is selected separately from the visible terminal.

Not to scale. The illustration does not establish manufacturing dimensions, airflow, sound or classification.

VLG-H / SIZE SCHEDULE

VLG-H

Hidden linear slot diffuser

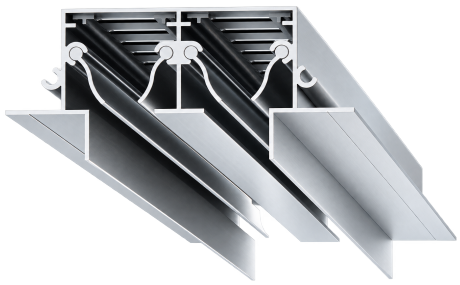

Nominal connection key / not to scale

A concealed-frame terminal for a fine slot line within the finished ceiling. Coordinate the hidden frame, slot count and air route with the ceiling build-up.

4 listed nominal options



Nominal L / slot count selected

Code	Slots	Nominal L / mm
VLG-H	1	1000
VLG-H	2	1000
VLG-H	3	1000
VLG-H	4	1000

The schedule lists 1 to 4 slots at a nominal length of 1000 mm. Confirm the actual profile, slot width, ceiling build-up and mounting detail.

VLG-H / INSTALLATION EXAMPLE

Concealed slot ceiling installation

Illustrative arrangement only. Coordinate the selected terminal, connection and installation requirements.

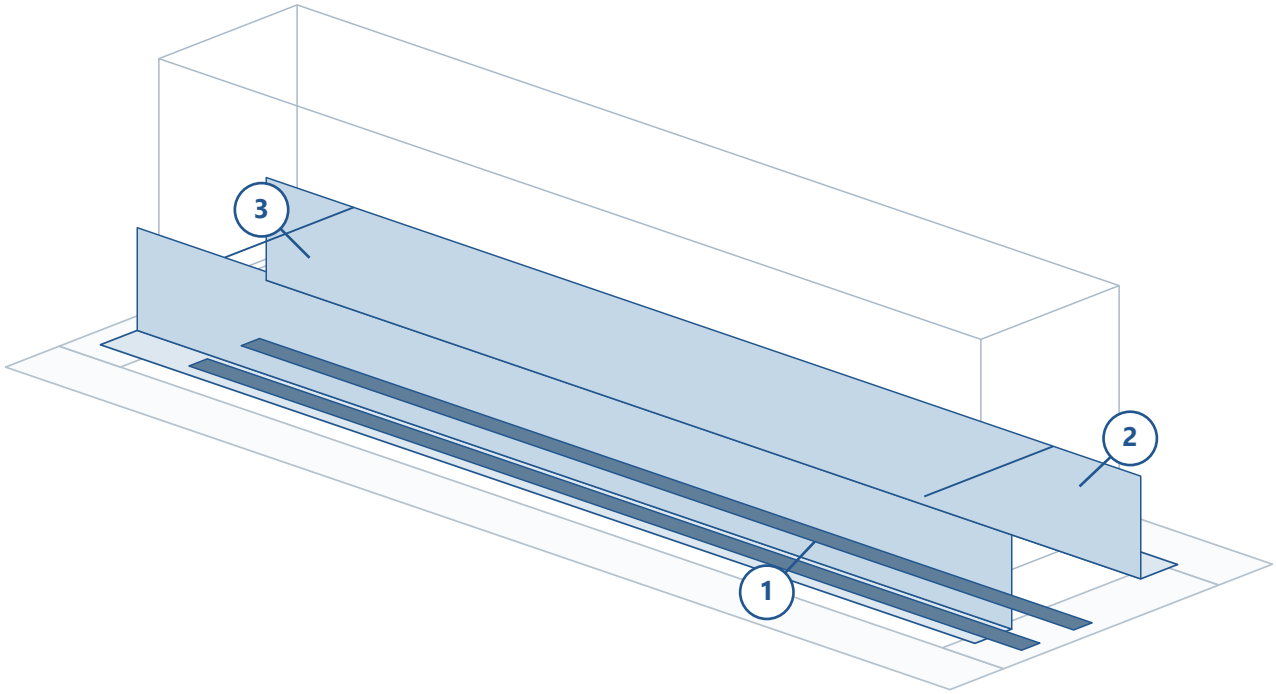

01 / Concealed slot face

The air passage remains visible at the ceiling line while the frame integrates into the surrounding finish.

02 / Hidden frame junction

The cutaway illustrates the hidden interface only. Confirm profile engagement and the offered fixing detail.

03 / Ceiling and plenum

Coordinate independent plenum support, ceiling finish and service access before closing the ceiling.

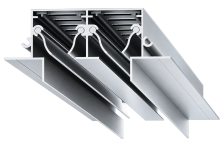

INTERFACE & SERVICE

Confirm the offered fixing, sealing and access arrangement. Supporting construction is installation context and is selected separately from the visible terminal.

Not to scale. The illustration does not establish manufacturing dimensions, airflow, sound or classification.

VAWL / SIZE SCHEDULE

VAWL

Weather louvre

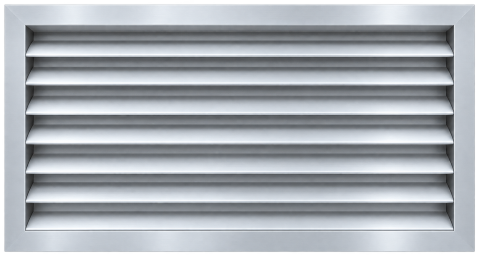

An exterior terminal for an intake or discharge opening. Coordinate the blade orientation, facade junction and drainage route with the selected ventilation duty.

289 listed nominal options

Nominal connection key / not to scale

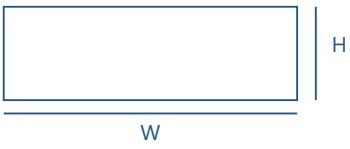

W / H	200	300	400	500	600	700	800	900	1000	1100	1200	1400	1600	1800	2000	2200	2500
200	•	•	•	•	•	•	•	•	•	•	•	•	•	•	•	•	•
300	•	•	•	•	•	•	•	•	•	•	•	•	•	•	•	•	•
400	•	•	•	•	•	•	•	•	•	•	•	•	•	•	•	•	•
500	•	•	•	•	•	•	•	•	•	•	•	•	•	•	•	•	•
600	•	•	•	•	•	•	•	•	•	•	•	•	•	•	•	•	•
700	•	•	•	•	•	•	•	•	•	•	•	•	•	•	•	•	•
800	•	•	•	•	•	•	•	•	•	•	•	•	•	•	•	•	•
900	•	•	•	•	•	•	•	•	•	•	•	•	•	•	•	•	•
1000	•	•	•	•	•	•	•	•	•	•	•	•	•	•	•	•	•
1100	•	•	•	•	•	•	•	•	•	•	•	•	•	•	•	•	•
1200	•	•	•	•	•	•	•	•	•	•	•	•	•	•	•	•	•
1400	•	•	•	•	•	•	•	•	•	•	•	•	•	•	•	•	•
1600	•	•	•	•	•	•	•	•	•	•	•	•	•	•	•	•	•
1800	•	•	•	•	•	•	•	•	•	•	•	•	•	•	•	•	•
2000	•	•	•	•	•	•	•	•	•	•	•	•	•	•	•	•	•
2200	•	•	•	•	•	•	•	•	•	•	•	•	•	•	•	•	•
2500	•	•	•	•	•	•	•	•	•	•	•	•	•	•	•	•	•

All dimensions in mm. • = listed nominal neck W x H combination.

Nominal neck W x H is listed. Confirm outside frame, depth, sectioning, screen and the selected weather-performance evidence.

VAWL / INSTALLATION EXAMPLE

External wall installation

Illustrative arrangement only. Coordinate the selected terminal, connection and installation requirements.

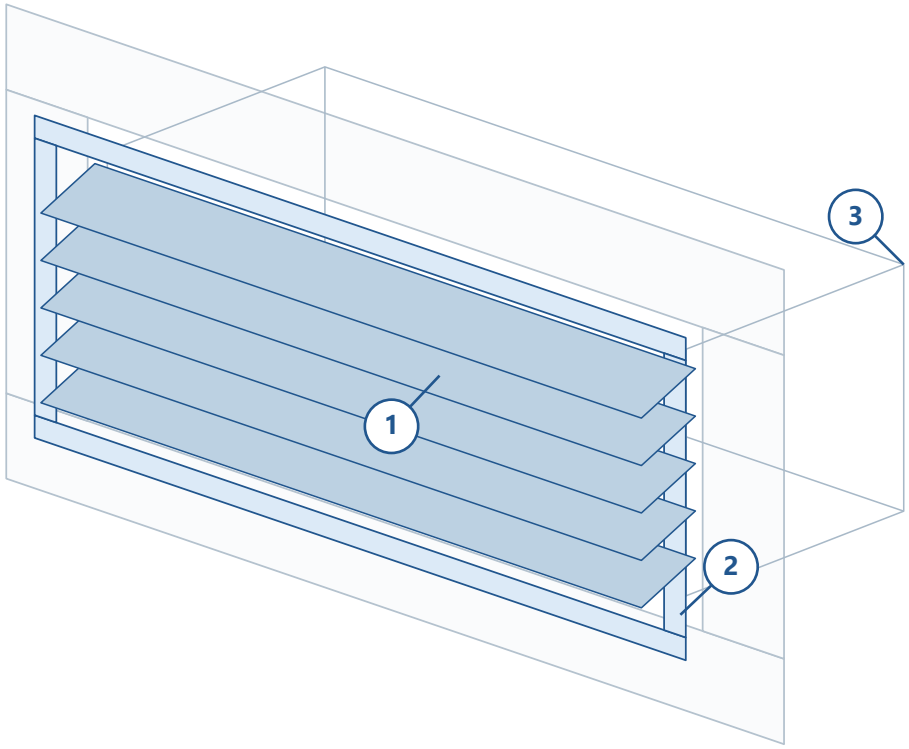

01 / Weather louvre blades

Coordinate blade orientation and drainage. The drawing does not establish a water-penetration rating.

02 / Facade connection

Confirm the frame, sealing and fixing details for the actual facade construction.

03 / Air route and support

Coordinate duct or plenum support, access and any selected screen. Keep the drainage path unobstructed.



INTERFACE & SERVICE

Confirm the offered fixing, sealing and access arrangement. Supporting construction is installation context and is selected separately from the visible terminal.

Not to scale. The illustration does not establish manufacturing dimensions, airflow, sound or classification.

03 / AIR-SIDE SELECTION

Size and duty are different inputs.

Use the selected terminal performance data; nominal dimensions alone do not establish flow, pressure loss or room comfort.

Selection input	Include in the project assessment
Airflow and pressure	Design supply, extract or transfer flow; available pressure; selected terminal resistance.
Room air distribution	Selected discharge pattern, throw, temperature difference and occupied-zone velocity.
Sound	Selected sound data at the required duty, including any plenum or regulation device.
Effective area	Use the selected product free/effective area. Nominal W x H or duct area is not a substitute.
Exterior duty	For an exterior louvre, coordinate rain exposure, drainage, screen, air velocity and tested performance.

Nominal size schedules are listed by product. Product-specific flow, pressure, throw, sound and weather-performance values must come from the offered selection; no unverified numerical ratings are assigned.

A selected terminal and its plenum, damper, screen or support form a coordinated assembly. Optional components require their own dimensions and selection.

04 / PROJECT SCHEDULE

Release the complete terminal.

Issue one coordinated schedule with the selected room duty, product configuration and installation detail.

Required record	Confirm before release
Identification	Voltvent code, nominal size, quantity, room/duct reference and air function.
Geometry	Actual neck, outside face, depth, finished opening, frame overlap and mounting interface.
Construction	Selected material, finish, blade/core arrangement, service environment and cleaning access.
Air-side selection	Offered airflow, pressure, air pattern, throw, effective area and sound data.
Installation	Selected fixing, sealing, independent support, plenum/duct connection and access.
Additional interfaces	Any damper, screen, return-air path, continuous-run joint or ceiling/door/facade requirement.

READ THE SCHEDULE WITH THE DRAWING

All 10 series use the nominal schedules listed in this catalogue. Outside frame dimensions and selected performance remain part of the offered product documentation. Catalogue review and engineering release remain separate.

VOLTVENT®
VENTILATION SYSTEMS

VENTILATION ACCESSORIES

Grilles & diffusers

ROOM AIR TERMINALS / TEN SERIES



VPDV



VCD-S



VCD-R



VDDG



VSDG



VLG



VDTG



VLSD

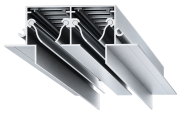

VLG-H

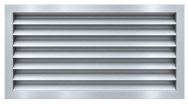

VAWL

Air distribution. In detail.

Voltvent Ventilation Systems

www.voltvent.com

EN / V1 / REVIEW