VAF-SF SERIES

# Axial cooling fans

# VAF-SF

EXTERNAL-ROTOR AC MOTOR

PROTECTIVE WIRE GUARD



250-630
Fan diameter / mm

14
Motor variants

50 Hz
Single / three phase

01 / PRODUCT OVERVIEW

# Designed for cooling applications.



### 01 Direct axial airflow

An external-rotor AC motor directly drives the axial impeller. Seven fan diameters cover the series.

### 02 Guard and mounting

Powder-coated steel guard and support components. Impeller material depends on the supplied variant.

### 03 Cooling and ventilation

For refrigeration equipment, industrial chillers and ventilation equipment. Provide unobstructed inlet and outlet paths.

SELECTION & PERFORMANCE

# Select by diameter and motor variant.

Fourteen 50 Hz variants combine 4- or 6-pole motors with single- or three-phase supply. Pressure curves show listed performance data and remain within their supplied airflow domains. Observe the selected motor voltage, capacitor and transported-air temperature limit.

| Selection parameter | Catalogue basis |
|---|---|
| **Fan diameter range** | 250-630 mm / 7 diameters |
| **Nominal input power** | 55-1000 W |
| **Electrical supply** | 230 V / 1 phase or 400 V / 3 phase |
| **Motor insulation / protection** | Class F / IP54 |

Performance data. Speed control must suit the selected motor.

02 / TECHNICAL DATA

# Compare the motor variants.

14 MOTOR VARIANTS / 50 Hz

| Model | Poles | V / PH | Input W | Airflow $m^3/h$ | Speed rpm | Current A | Weight kg | Air temp. °C |
|---|---|---|---|---|---|---|---|---|
| **VAF-SF 250** | 4 | 230/1 | 55 | 1000 | 1370 | 0.26 | 2.5 | 55 |
| **VAF-SF 300** | 4 | 230/1 | 72 | 1700 | 1300 | 0.32 | 4 | 50 |
| **VAF-SF 300** | 6 | 230/1 | 80 | 1350 | 1050 | 0.4 | 4 | 50 |
| **VAF-SF 350** | 6 | 230/1 | 90 | 2300 | 1050 | 0.41 | 4.7 | 55 |
| **VAF-SF 350** | 4 | 230/1 | 115 | 3100 | 1225 | 0.5 | 4.7 | 55 |
| **VAF-SF 400** | 6 | 230/1 | 110 | 2900 | 1050 | 0.48 | 6.1 | 40 |
| **VAF-SF 400** | 4 | 400/3 | 140 | 4000 | 1400 | 0.47 | 6.1 | 40 |
| **VAF-SF 400** | 4 | 230/1 | 160 | 4000 | 1400 | 0.75 | 6.1 | 40 |
| **VAF-SF 450** | 4 | 400/3 | 200 | 5700 | 1400 | 0.5 | 6.9 | 40 |
| **VAF-SF 450** | 4 | 230/1 | 245 | 5700 | 1400 | 1.2 | 6.9 | 40 |
| **VAF-SF 500** | 4 | 230/1 | 420 | 6900 | 1300 | 2 | 9.5 | 40 |
| **VAF-SF 500** | 4 | 400/3 | 425 | 6900 | 1300 | 0.75 | 9.5 | 80 |
| **VAF-SF 630** | 4 | 230/1 | 970 | 12770 | 1335 | 4.55 | 17 | 40 |
| **VAF-SF 630** | 4 | 400/3 | 1000 | 13000 | 1365 | 2.19 | 17 | 40 |

Airflow: nominal maximum airflow in $m^3/h$; not a selected duty point. Listed curve domains may differ from nominal airflow. Nominal input power, speed and current are ratings; operating values vary with airflow.

Temperature: maximum transported-air temperature for each variant. Class F / IP54 throughout the supplied records. 4P / 6P: motor poles; 1PH / 3PH: supply phases.

03 / AIR PERFORMANCE / 01

# Fan Performance Curves

### VAF-SF 250 / 4P / 1PH / 55 W

1 phase / 50 Hz / reference 1370 rpm

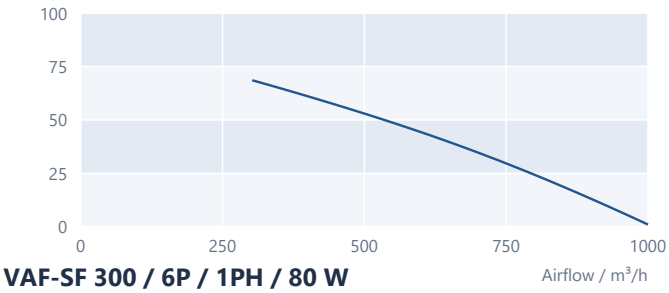


### VAF-SF 300 / 4P / 1PH / 72 W

1 phase / 50 Hz / reference 1300 rpm

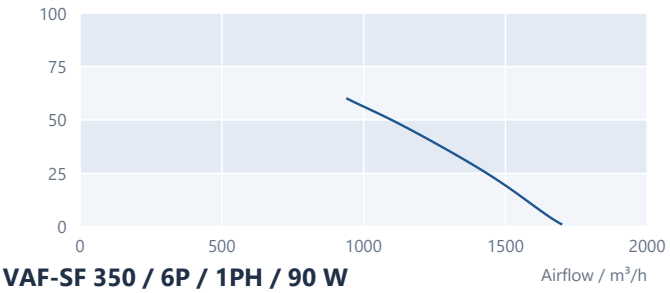


### VAF-SF 300 / 6P / 1PH / 80 W

1 phase / 50 Hz / reference 1050 rpm

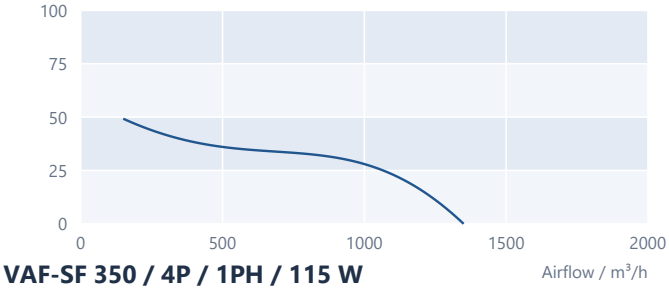


### VAF-SF 350 / 6P / 1PH / 90 W

1 phase / 50 Hz / reference 1050 rpm

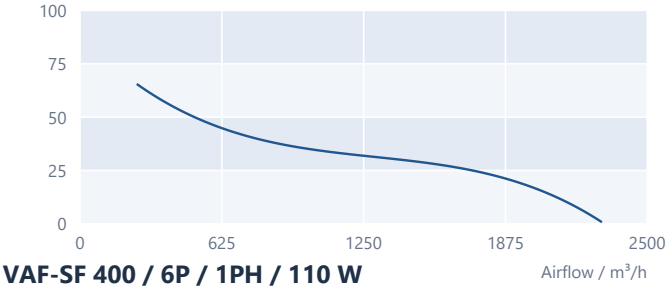


### VAF-SF 350 / 4P / 1PH / 115 W

1 phase / 50 Hz / reference 1225 rpm

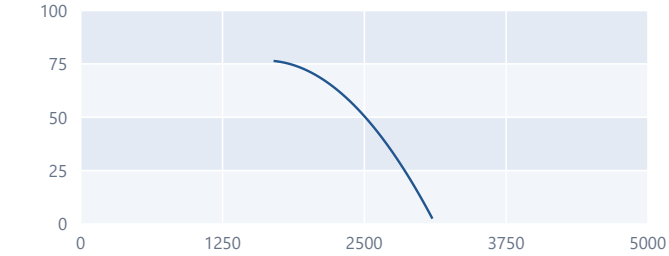


### VAF-SF 400 / 6P / 1PH / 110 W

1 phase / 50 Hz / reference 1050 rpm

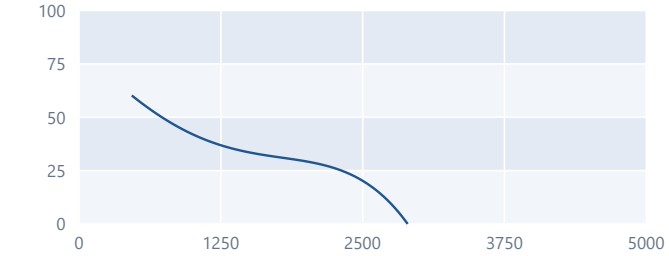


### VAF-SF 400 / 4P / 3PH / 140 W

3 phase / 50 Hz / reference 1400 rpm

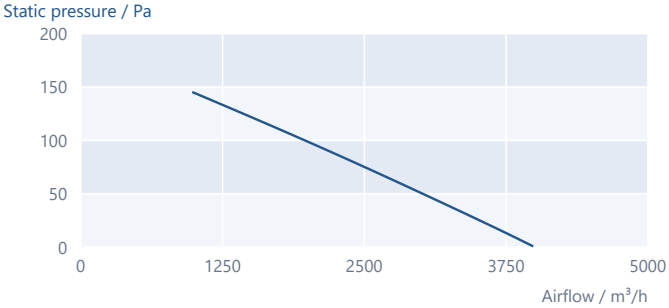


### VAF-SF 400 / 4P / 1PH / 160 W

1 phase / 50 Hz / reference 1400 rpm

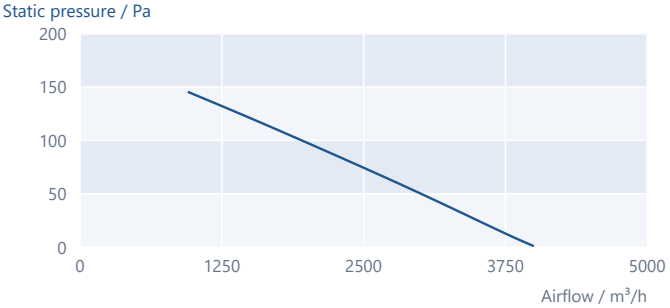


Model-specific scales. Listed 50 Hz pressure curves stay within listed airflow domains; negative-pressure tails are omitted at the zero-pressure crossing. No extrapolation.

03 / AIR PERFORMANCE / 02

# Fan Performance Curves

### VAF-SF 450 / 4P / 3PH / 200 W

3 phase / 50 Hz / reference 1400 rpm

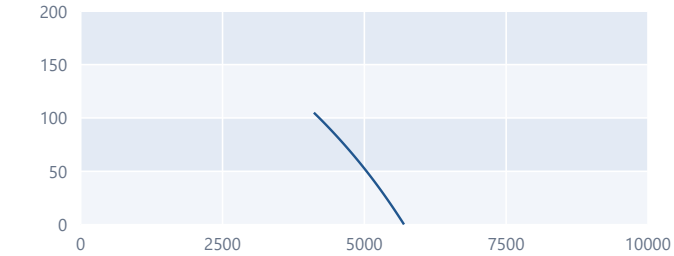


### VAF-SF 450 / 4P / 1PH / 245 W

1 phase / 50 Hz / reference 1400 rpm

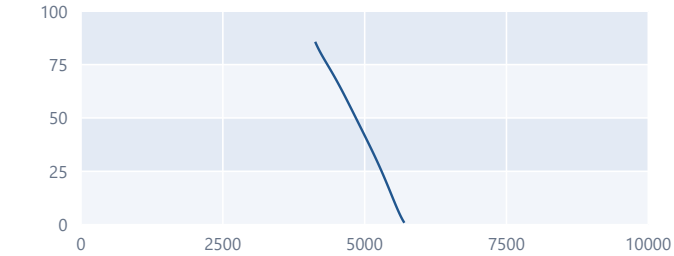


### VAF-SF 500 / 4P / 1PH / 420 W

1 phase / 50 Hz / reference 1300 rpm

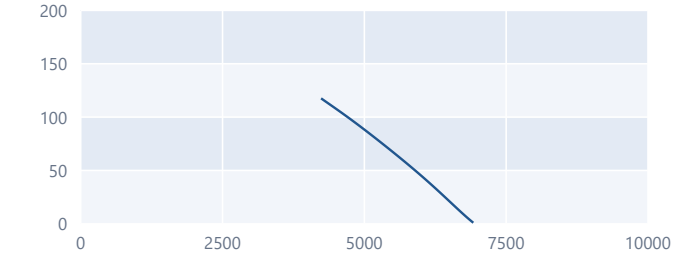


### VAF-SF 500 / 4P / 3PH / 425 W

3 phase / 50 Hz / reference 1300 rpm

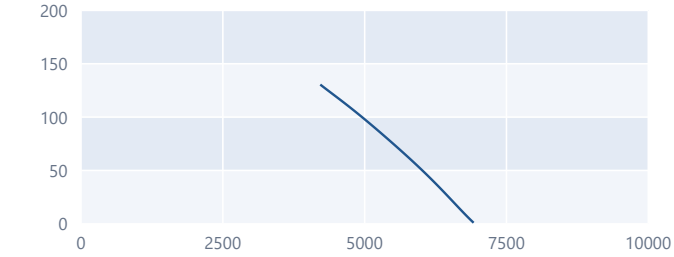


### VAF-SF 630 / 4P / 1PH / 970 W

1 phase / 50 Hz / reference 1335 rpm

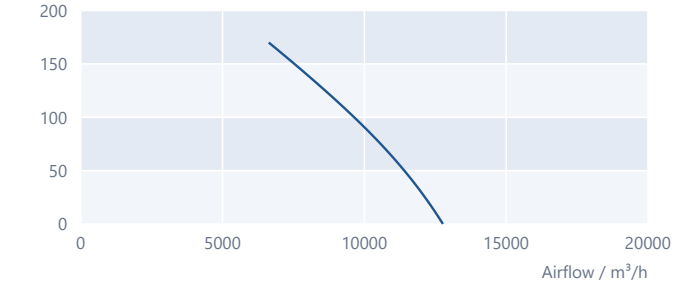


### VAF-SF 630 / 4P / 3PH / 1000 W

3 phase / 50 Hz / reference 1365 rpm

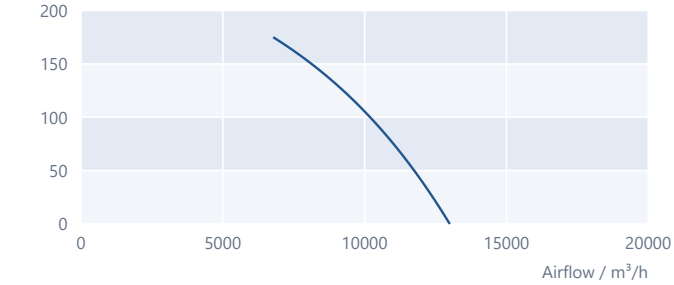


Model-specific scales. Listed 50 Hz pressure curves stay within listed airflow domains; negative-pressure tails are omitted at the zero-pressure crossing. No extrapolation.

04 / DIMENSIONAL DATA / 01

# Guard and mounting dimensions.

**250 / 300 / 350**

All dimensions in mm

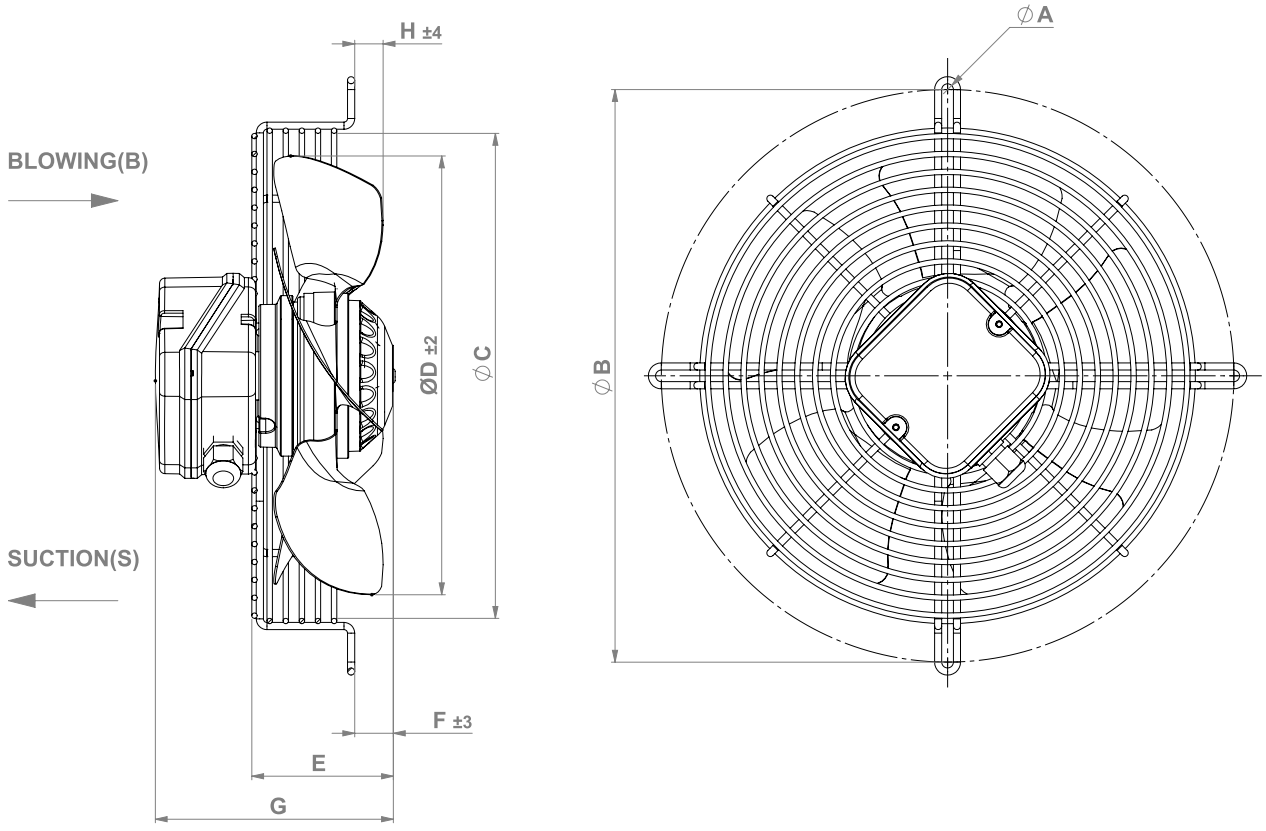


| Model | A | B | C | D | E | F | G | H |
|---|---|---|---|---|---|---|---|---|
| **VAF-SF 250** | 6.5 | 300 | 271 | 250 | 84 | 27 | 128 | 14 / 23 |
| **VAF-SF 300** | 6.5 | 360 | 330 | 300 | 105 | 47 | 147 | 20 / 29 |
| **VAF-SF 350** | 6.5 | 422 | 374 | 350 | 105 | 47 | 146 | 40 / 32 |

Original data drawing. H values are listed as S / B positions, matching the drawing. Check the selected mounting position and keep the protective guard clear.

04 / DIMENSIONAL DATA / 02

# Model-specific mounting details.

All dimensions in mm

### 400 / 450 / 500

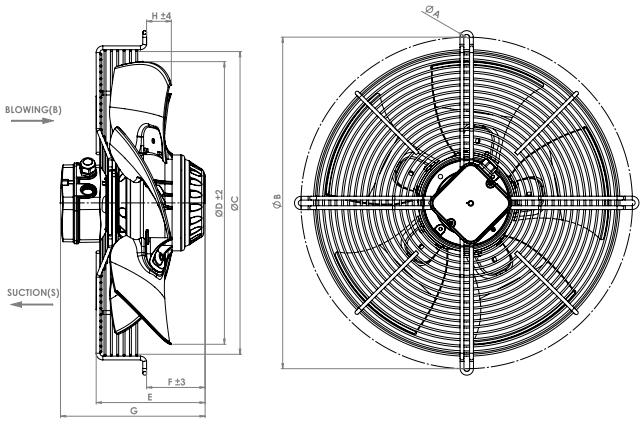


### 630

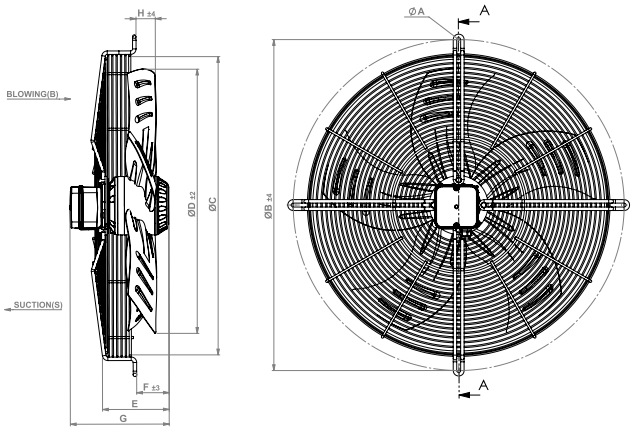


| Model | A | B | C | D | E | F | G | H |
|---|---|---|---|---|---|---|---|---|
| **VAF-SF 400** | 9 | 470 | 421 | 396 | 147 | 53 | 180 | 20 / 20 |
| **VAF-SF 450** | 9 | 522 | 472 | 444 | 158 | 65 | 190 | 25 / 17 |
| **VAF-SF 500** | 9 | 565 | 525 | 498 | 155 | 48 | 183 | 41 / 24 |
| **VAF-SF 630** | 9 | 760 | 685 | 629 | 153 | 75 | 227 | 44 / 35 |

Original data drawings are retained for each construction group. H values: S / B mounting positions. Provide inlet and outlet clearance and confirm the selected unit drawing before installation.

05 / ELECTRICAL & INSTALLATION

# Connect the selected motor.

Isolate the supply before installation or maintenance. Secure all mounting points and check rotation and airflow direction. Single-phase motors require the specified capacitor; suitable voltage control depends on the supplied motor. Confirm inverter suitability for three-phase motors.

## SINGLE PHASE / DIAGRAM 01

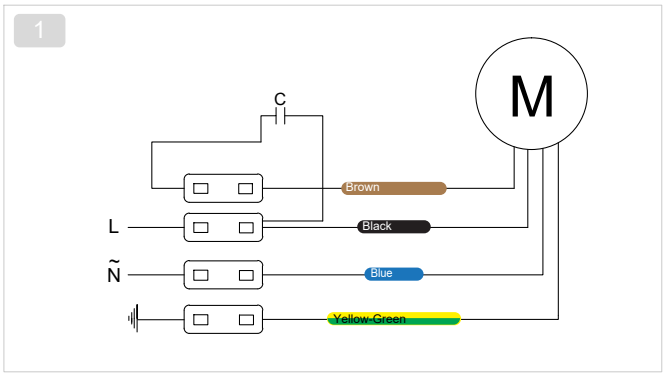


## SINGLE PHASE / DIAGRAM 08

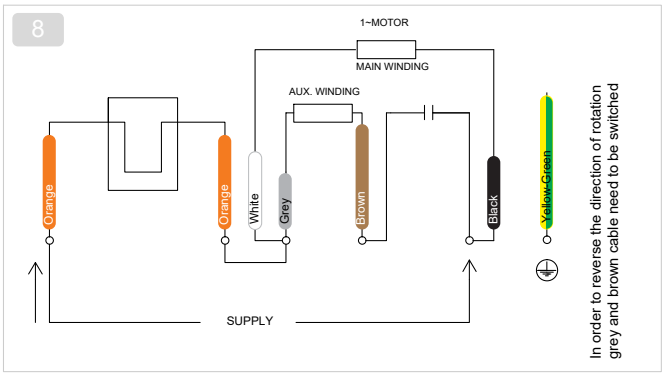


## THREE PHASE / DIAGRAM 15

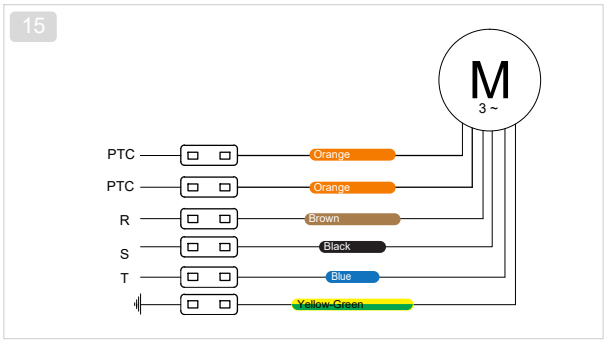


## SINGLE-PHASE CAPACITORS

| Model | Poles | Input | Capacitor | Cap. voltage |
|---|---|---|---|---|
| **VAF-SF 250** | 4P | 55 W | 1.5 µF | 400 V |
| **VAF-SF 300** | 4P | 72 W | 2.5 µF | 400 V |
| **VAF-SF 300** | 6P | 80 W | 1 µF | 400 V |
| **VAF-SF 350** | 6P | 90 W | 2.5 µF | 400 V |
| **VAF-SF 350** | 4P | 115 W | 4 µF | 400 V |
| **VAF-SF 400** | 6P | 110 W | 3.5 µF | 400 V |
| **VAF-SF 400** | 4P | 160 W | 5 µF | 400 V |
| **VAF-SF 450** | 4P | 245 W | 7 µF | 400 V |
| **VAF-SF 500** | 4P | 420 W | 8 µF | 400 V |
| **VAF-SF 630** | 4P | 970 W | 18 µF | 400 V |

Diagram 01: sizes 250-450 single phase. Diagram 08: sizes 500 and 630 single phase. Diagram 15: all three-phase variants. Match the actual motor nameplate and supplied unit diagram.

# VAF-SF

## Axial cooling fans

VOLTVENT®
VENTILATION SYSTEMS

info@voltvent.com | voltvent.com