VOLTVENT®
VENTILATION SYSTEMS

VENTILATION ACCESSORIES

Electric Duct Heaters

VREH-R / VREH-C



VREH-R

Rectangular duct heater



VREH-C

Circular duct heater

Add heat. Coordinate the airflow.

Technical catalogue

Selection schedules & installation examples

EN / V1 / REVIEW

PRODUCT RANGE

Electric Duct Heaters

Two duct formats. One coordinated approach to air heating.



VREH-R

Rectangular duct heater

Flanged heater format for a rectangular duct route. Select the connection, heating duty and control arrangement together.

06 / DATA 07 / INSTALLATION



VREH-C

Circular duct heater

Spigot heater format for a circular duct route. Select the duct diameter, heating duty and electrical configuration together.

04 / DATA 05 / INSTALLATION

03 / Application 08 / Dimensions & configuration 09 / Controls & protection
10 / Preliminary sizing 11 / Project specification

01 / APPLICATION

Heating in the duct route

Preheating, main air heating or reheating, selected to suit the ventilation duty.



Circular connection



Rectangular connection

1 Heating section

Electrical elements transfer heat to the passing air stream.

2 External electrical enclosure

Keep the connection and control compartment accessible outside the duct.

3 Duct interfaces

Select the nominal duct connection separately from the complete casing envelope.

4 Coordinated operation

Select fan duty, airflow proof and heater control as one operating sequence.

Approved product photographs illustrate the product range. Confirm the selected configuration and complete dimensions on the final order documents.

02 / CIRCULAR HEATER

VREH-C

Circular electrical duct heater



An in-duct heating section for a circular connection. The electrical enclosure remains outside the air passage, with access for connection and maintenance.

NOMINAL CONNECTION SELECTION

Ø100-450 mm

OPTIONAL HEAT-RECOVERY PAIRINGS

Heater model	Optional pairing	Nominal Ø / mm	Power / kW
VREH-C 3,00	VHRU 1000	250	3.00
VREH-C 6,00	VHRU 2000	305	6.00
VREH-C 9,00	VHRU 3000	355	9.00
VREH-C 12,00	VHRU 4000	400	12.00
VREH-C 15,00	VHRU 6000	450	15.00

These are the listed optional pairings. They do not restrict the heater to these units. Diameter is the nominal connection designation, including the Ø305 entry; confirm mating dimensions before manufacture.

Select heating power, electrical supply and control stages for the required airflow and temperature rise. Not every power/diameter combination is a released configuration.

03 / INSTALLATION EXAMPLE

Circular duct installation

Fan → straight circular duct → heater

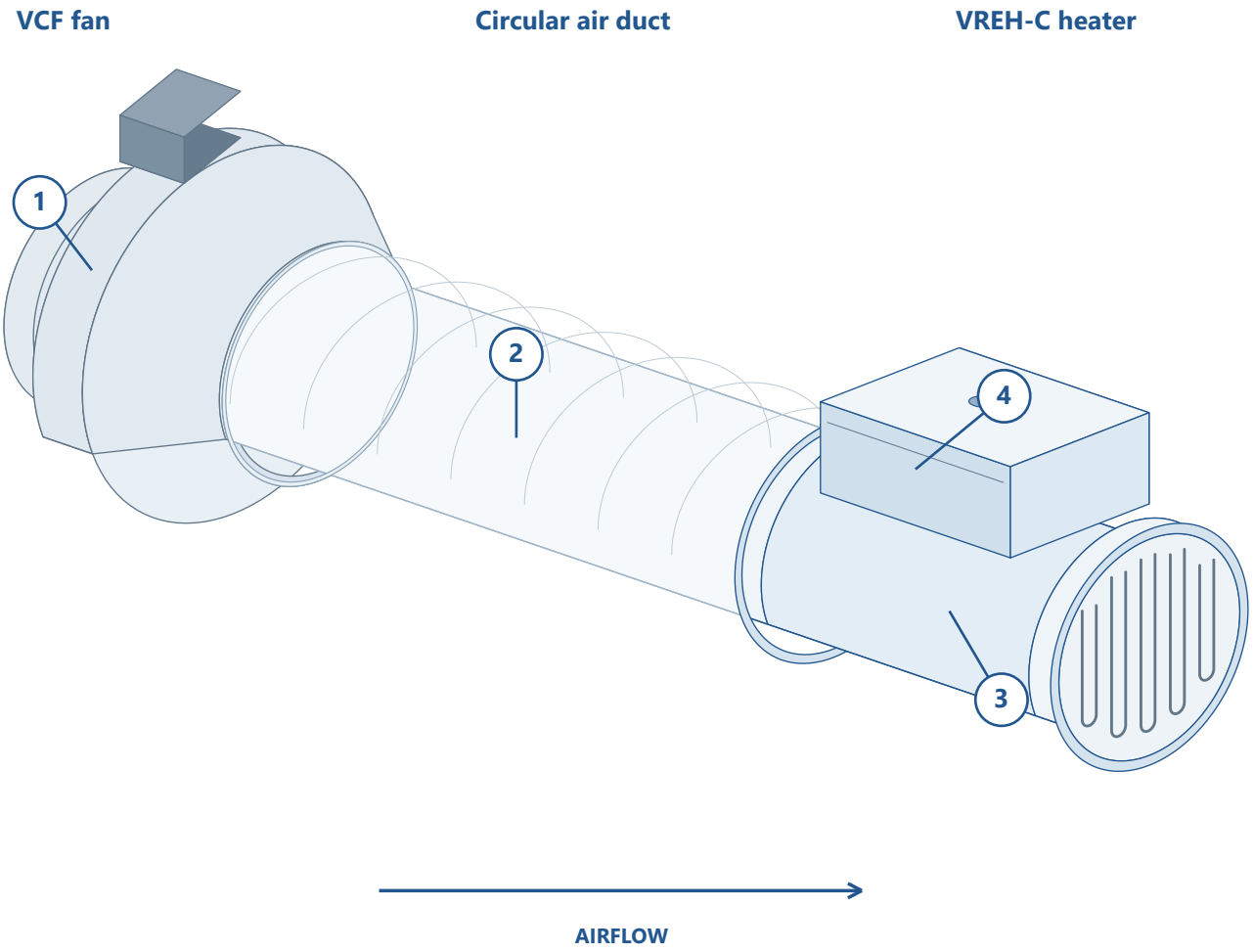

1 Fan example

VCF illustrates the circular fan interface. Select the actual fan for the required system duty.

2 Straight duct section

Provide the straight run and uniform airflow required by the selected heater instructions.

3 / Heating section Match the connection and support the assembly as specified.
4 / Electrical access Keep the external enclosure accessible and protect it from condensate.

04 / RECTANGULAR HEATER

VREH-R

Rectangular electrical duct heater



An in-duct heating section for a rectangular connection. Coordinate the clear duct opening, flanged interface, element section and external electrical enclosure.

NOMINAL W / H SELECTION ENTRIES

200-2000 mm

OPTIONAL HEAT-RECOVERY PAIRINGS

Heater model	Optional pairing	W / mm	H / mm	Power / kW
VREH-R 3,00	VHRU-B 1000	200	455	3.00
VREH-R 3,00	VHRU-B 2000	300	455	3.00
VREH-R 5,00	VHRU-B 3000	400	555	5.00
VREH-R 8,00	VHRU-B 4000	400	555	8.00
VREH-R 10,00	VHRU-B 5000	400	655	10.00
VREH-R 13,00	VHRU-B 6000	400	855	13.00

W and H are the listed nominal connection values. The listed optional pairings are examples within the product range; they are not an exclusive compatibility list.

Specify W × H separately from heater length, terminal-box projection and service clearance. Overall dimensions are confirmed on the selected arrangement drawing.

05 / INSTALLATION EXAMPLE

Rectangular duct installation

Fan → straight rectangular duct → heater

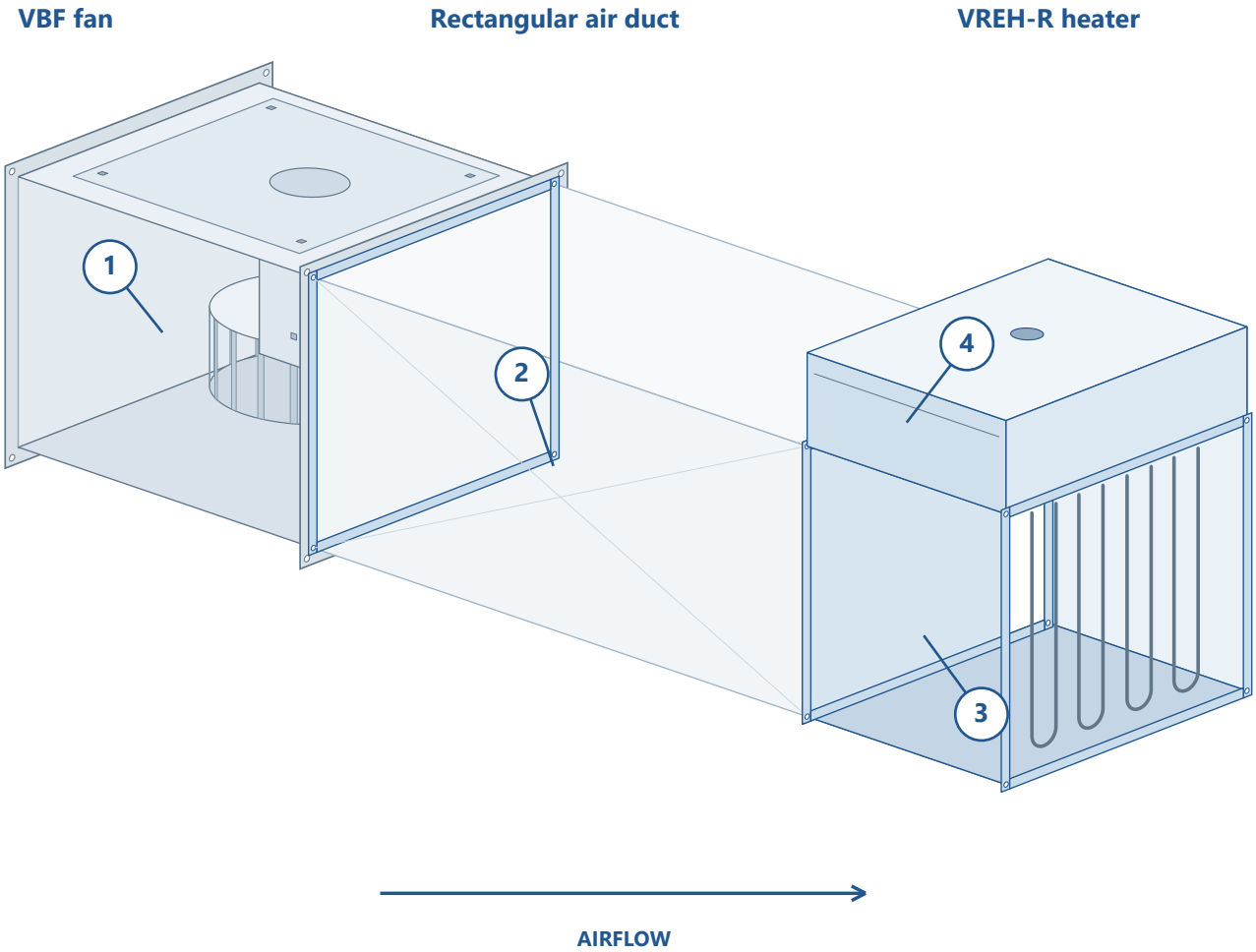

1 Fan example

VBF illustrates the rectangular fan interface. Other suitable fan arrangements can be selected.

2 Straight duct section

Keep a uniform air path through the element bank. Set the straight-run length in the final layout.

3 / Heater interface Match the duct opening and flange arrangement.
4 / Service access Leave access to the external electrical enclosure and isolate before maintenance.

06 / CONFIGURATION

Define the connection first

Nominal duct connection and complete heater envelope are separate selection fields.

Selection field	VREH-C / circular	VREH-R / rectangular
Nominal connection entry	Ø100-450 mm	W / H: 200-2000 mm
5 kW configuration example	Ø250 mm	500 × 300 mm
Example casing material	G / galvanised steel	G / galvanised steel
Example supply configuration	3 / 400 V · 3~	3 / 400 V · 3~
Example control stages	2	2

Configuration examples explain the selection fields; they are not additional released model codes. Confirm allowable power, connection and control combinations for the offered unit.

CASING MATERIAL SELECTIONS

G / Galvanised steel

S / Stainless steel

SUPPLY CONFIGURATION LABELS

Code	Supply designation
1	230 V · 1~
2	400 V · 2~
3	400 V · 3~

07 / CONTROLS & PROTECTION

Airflow before heat

Functional sequence only. Select the actual circuit and protection devices for the offered heater.

01

FAN ENABLE

Start the selected fan and establish the required airflow.

02

AIRFLOW PROOF

Use the specified proving device before enabling heater power.

03

HEAT DEMAND

Apply staged switching or modulating power control as specified.

04

TEMPERATURE LIMIT

Use independent temperature protection and the selected reset arrangement.

SELECT THE CONTROL ARRANGEMENT

On/off stages use appropriately rated switching equipment. Modulating control uses a selected power controller and compatible demand signal. Temperature sensing and airflow proof remain part of the coordinated operating sequence.

Loss of proven airflow or operation of safety protection must remove heater demand/power as required by the selected safety circuit. Confirm restart, reset and fan run-on functions on the approved control drawing.

08 / PRELIMINARY SIZING

Relate heat to airflow

A preliminary air-heating calculation supports selection. It does not replace a heater duty report.

$$P \approx 0.00036 \times Q \times \Delta T$$

P / kW Q / m^3/h ΔT / K

This simplified sensible-heat relation uses an approximate standard-air heat-capacity factor. Adjust the design calculation for actual air conditions and applicable losses.

ILLUSTRATIVE CALCULATION

Input / result	Illustrative value
Airflow Q	1000 m^3/h
Temperature rise ΔT	10 K
Calculated heat input P	3.60 kW
Illustrative circular duct diameter	250 mm
Calculated duct area	0.0491 m^2
Calculated average duct velocity	5.66 m/s

Area = $\pi D^2 / 4$; velocity = Q / (3600 × area), with D in metres. The values above are a calculation example, not a product rating or a confirmed minimum operating airflow.

09 / PROJECT SPECIFICATION

Complete the selected duty

Confirm the selected configuration before manufacture and installation.

Coordinate	Specify / confirm
Duct connection	Circular diameter or rectangular W × H; connection tolerances and flange details.
Heating duty	Required airflow, entering temperature, leaving temperature and heating power.
Electrical arrangement	Actual supply, stages, rated current, switching and local isolation.
Controls & interlocks	Demand control, airflow proof, temperature limits, reset and fan run-on.
Complete envelope	Heater length, electrical enclosure, insertion depth and service space.
Mechanical installation	Orientation, straight duct run, independent supports and condensate protection.
Selected performance	Permitted air-velocity range, temperature limits and pressure loss at the design flow.
Handover documents	Selected arrangement drawing, wiring diagram, settings and commissioning checks.

The installation examples show the fan, duct and heater relationship. They are dimensionless and do not define an exclusive fan match, anchorage design or electrical terminal scheme.

VOLTVENT®
VENTILATION SYSTEMS

VENTILATION ACCESSORIES

Electric Duct Heaters

VREH-R / VREH-C



VREH-R

Rectangular duct heater



VREH-C

Circular duct heater

Add heat. Coordinate the airflow.

Voltvent Ventilation Systems

www.voltvent.com

EN / V1 / REVIEW