VOLTVENT®
VENTILATION SYSTEMS

VHPF SERIES

High pressure industrial centrifugal fans

VHPF

DIRECT-DRIVE CENTRIFUGAL DESIGN

POWDER-COATED STEEL HOUSING

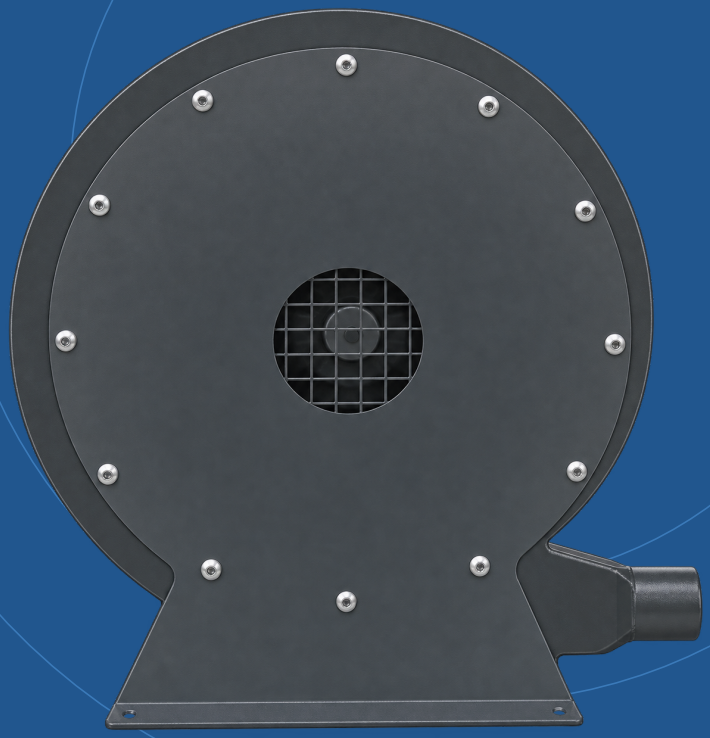

350-1650	09	50 Hz
Nominal airflow / m^3/h	Models in the range	Three phase / 400 V

info@voltvent.com | voltvent.com

01 / PRODUCT OVERVIEW

High pressure. Focused airflow.



01 Powder-coated steel construction

Sheet-steel scroll housing and centrifugal impeller. The asynchronous motor and fan assembly mount on a rigid steel base.

02 Direct-drive industrial fan

A single-inlet centrifugal design for high static pressure at relatively low airflow. Select the model from its own 50 Hz performance curve.

03 Process and equipment air supply

For industrial exhaust, dust collection and process air movement. Confirm suitability for the transported material and keep motor and impeller service access clear.

AIRFLOW & STATIC PRESSURE

Select the working point, model by model.

Match the required airflow and static pressure to the selected model curve. Nominal maximum airflow and maximum static pressure are separate ratings; they are not simultaneous working-point values. Allow for the pressure losses in the connected system.

Selection parameter	Series overview
Nominal airflow range	350-1650 m^3/h
Maximum static pressure	2450-9800 Pa; model-specific ratings
Nominal motor power	0.37-7.50 kW
Electrical supply / motor configuration	400 V / 3 phase / 50 Hz / 2 poles
Motor insulation / protection / cooling	Class F / IP55 / TEFC / IE2
Motor range / maximum transported air	-20 to +40 °C / +40 °C

Performance data. Use the actual motor nameplate, selected dimensions and supplied terminal diagram.

02 / TECHNICAL DATA

Compare the complete range.

NOMINAL RATINGS / 400 V / 3 PHASE / 50 Hz

Model	Airflow m^3/h	Max. static pressure / Pa	Motor kW	Speed rpm	Current A	Weight kg	Sound pressure dB(A) / 3 m
VHPF 1T	350	2450	0.37	2800	1.10	20	56
VHPF 2T	420	2900	0.75	2770	1.88	27	59
VHPF 3T	450	3800	1.10	2895	2.46	41	60
VHPF 4T	550	4200	1.50	2845	3.20	46	62
VHPF 5T	620	4900	2.20	2840	4.85	57	64
VHPF 6T	1100	7500	3.00	2850	5.90	61	65
VHPF 7T	1280	7600	4.00	2920	7.80	68	69
VHPF 8T	1360	8600	5.50	2940	9.90	107	72
VHPF 9T	1650	9800	7.50	2930	13.30	135	74

Airflow, maximum static pressure, motor power, speed and current are nominal ratings. Select the actual airflow and pressure on the model curve. Supplied pressure polynomials are retained without rescaling to the separate nominal maximum-pressure fields.

Sound pressure is the supplied model-specific reference at 3 m. Verified sound-power levels and octave-band spectra are not supplied. Constant listed power, speed and current curves are rating references; no variable electrical-performance or measured-efficiency curve is inferred.

COMMON MOTOR & OPERATING DATA

Parameter	Current catalogue basis
Motor	2 poles / Class F / IP55 / TEFC / IE2 / S1
Motor operating range	-20 to +40 °C
Maximum transported-air temperature	+40 °C

03 / AIR PERFORMANCE / 1 OF 2

Fan Performance Curves

VHPF 1T

3~400 V / 50 Hz / 0.37 kW motor

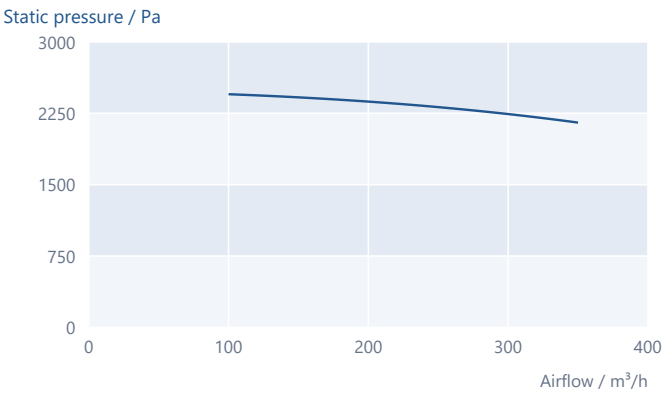

VHPF 2T

3~400 V / 50 Hz / 0.75 kW motor

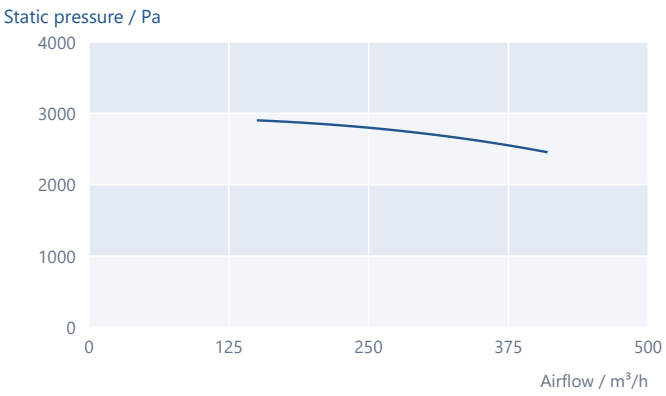

VHPF 3T

3~400 V / 50 Hz / 1.10 kW motor

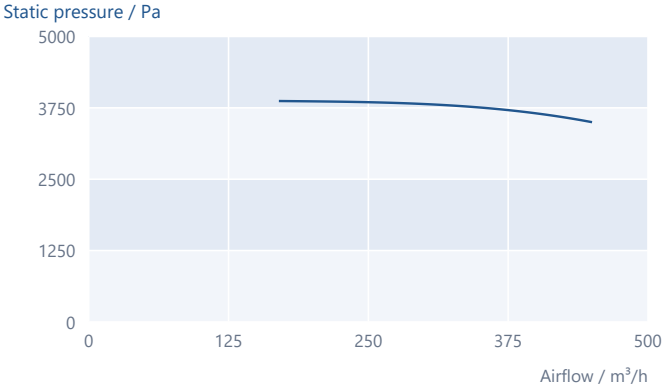

VHPF 4T

3~400 V / 50 Hz / 1.50 kW motor

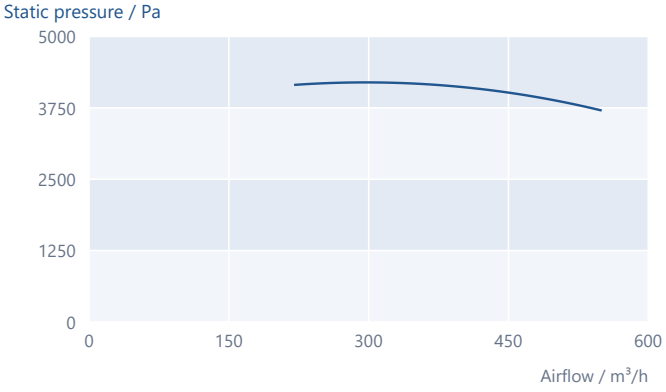

VHPF 5T

3~400 V / 50 Hz / 2.20 kW motor

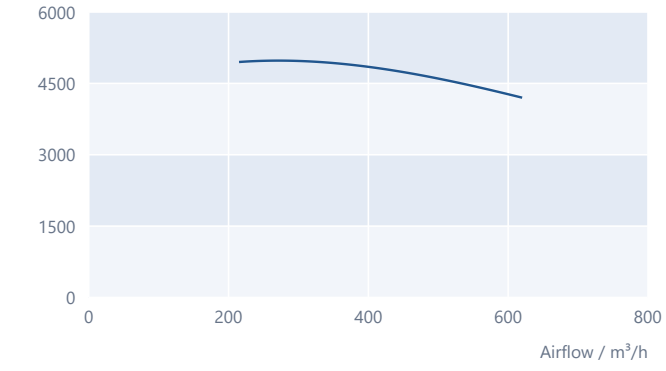

VHPF 6T

3~400 V / 50 Hz / 3.00 kW motor

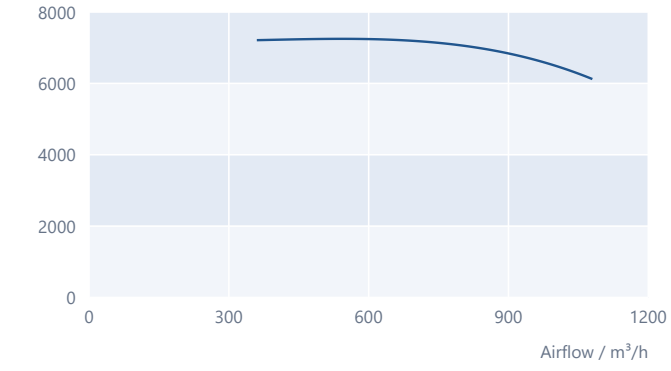

Model-specific scales. Original data pressure polynomials and curve domains are retained. No pressure normalization or extrapolation. Use FSP to check the required working point and selected model.

03 / AIR PERFORMANCE / 2 OF 2

Fan Performance Curves

VHPF 7T

3~400 V / 50 Hz / 4.00 kW motor

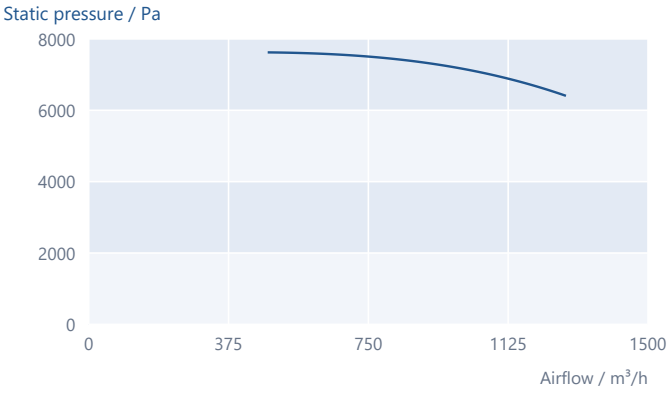

VHPF 8T

3~400 V / 50 Hz / 5.50 kW motor

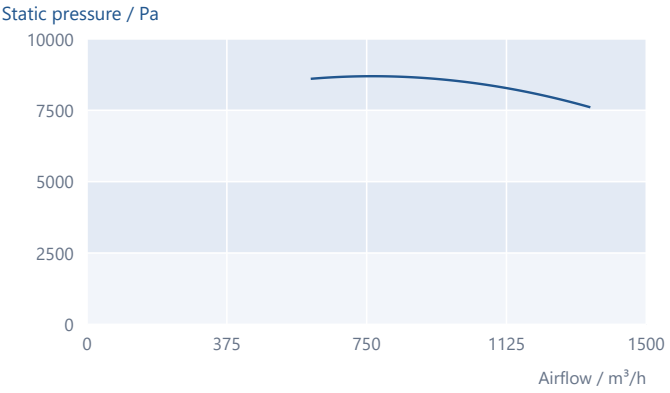

VHPF 9T

3~400 V / 50 Hz / 7.50 kW motor

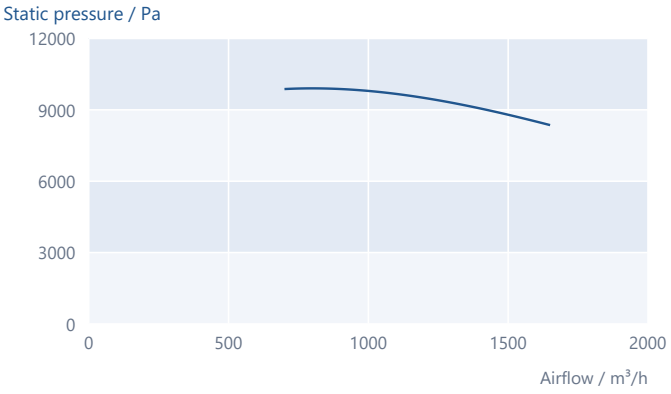

READING THE MODEL CURVES

Keep the curve and rating distinct.

Each curve applies to its stated 50 Hz model and supplied airflow interval. These partial curves retain nonzero pressure at their endpoints. They are not extended to zero airflow, zero pressure or a nominal airflow beyond the supplied interval.

VHPF 2T: curve limit 410 / nominal airflow 420 m³/h. VHPF 6T: 1080 / 1100 m³/h. VHPF 8T: 1350 / 1360 m³/h. The table retains the nominal figures.

Model-specific scales. Original data pressure polynomials and curve domains are retained. No pressure normalization or extrapolation. Use FSP to check the required working point and selected model.

04 / DIMENSIONAL DATA

Plan the connections and mounting.

ORIGINAL SERIES DRAWING / A-H, J-K

All dimensions in mm

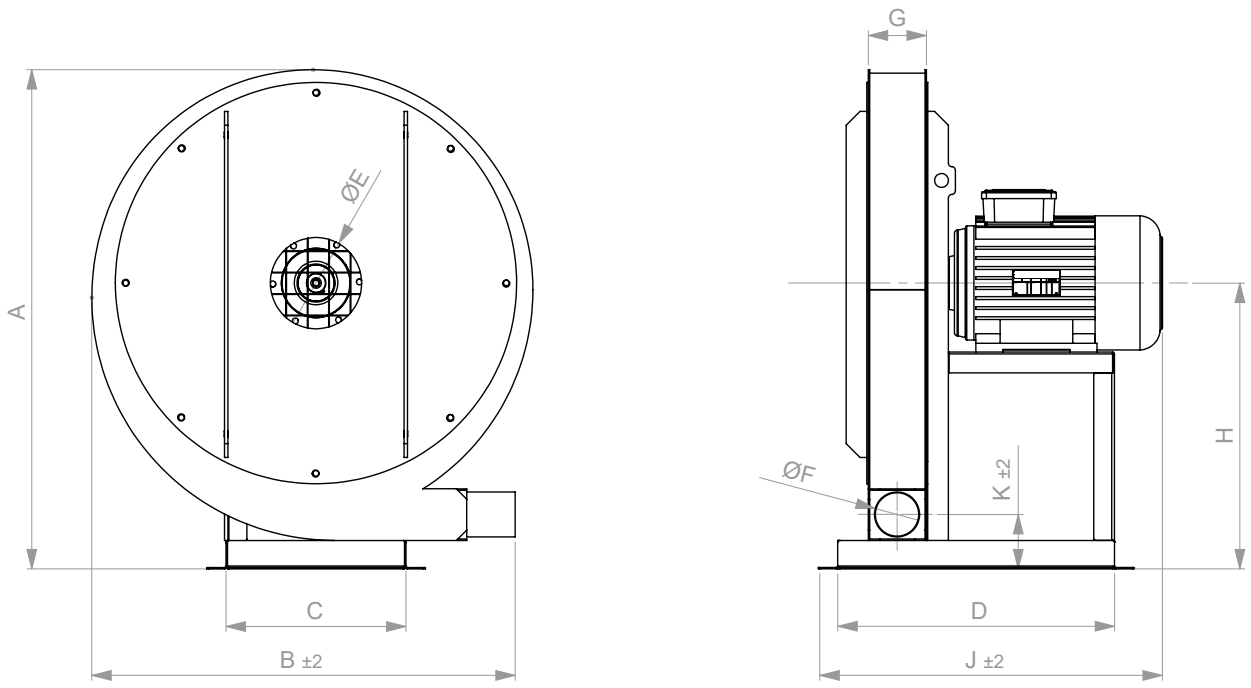

Model	A	B	C	D	E	F	G	H	J	K
VHPF 1T	500	440	210	320	120	60	65	285	400	73
VHPF 2T	575	515	210	320	130	60	65	330	390	73
VHPF 3T	620	580	210	320	130	60	65	355	390	73
VHPF 4T	650	555	210	360	130	60	65	375	415	76
VHPF 5T	685	600	210	360	130	65	75	390	430	76
VHPF 6T	725	615	260	400	130	65	85	415	495	79
VHPF 7T	785	685	300	440	150	75	85	460	500	82
VHPF 8T	855	745	300	480	150	85	105	495	560	86
VHPF 9T	870	860	360	500	150	105	125	465	580	96

All dimensions in mm. E is the inlet diameter and F the circular discharge diameter, as labelled in the outline. Use the selected model and original drawing for mating connections; do not scale the drawing to obtain dimensions.

05 / INSTALLATION & MOTOR

Prepare the process connection.

01 Mounting and airflow

Fix the fan assembly to a rigid support. Keep the inlet, discharge and motor ventilation clear; provide access for inspection and cleaning. Follow the selected inlet/outlet dimensions, connection flange and mounting outline.

02 Supply, control and maintenance

All listed models use 400 V three-phase, 50 Hz motors. A compatible frequency inverter may regulate the motor; published curves apply to the listed 50 Hz condition. Confirm the actual motor and controller suitability. Isolate power before servicing.

INLET & DISCHARGE DIAMETERS / mm

Model	Inlet / E	Discharge / F
VHPF 1T	Ø120	Ø60
VHPF 2T	Ø130	Ø60
VHPF 3T	Ø130	Ø60
VHPF 4T	Ø130	Ø60
VHPF 5T	Ø130	Ø65
VHPF 6T	Ø130	Ø65
VHPF 7T	Ø150	Ø75
VHPF 8T	Ø150	Ø85
VHPF 9T	Ø150	Ø105

Current FSP motor operating range: -20 to +40 °C; maximum transported-air temperature: +40 °C. Confirm compatibility with the transported material and actual installation. Use the model-specific current and motor nameplate for supply design.

06 / ELECTRICAL CONNECTION

Match the motor terminal layout.

THREE PHASE / LAYOUT 19 / 400 V / 50 Hz

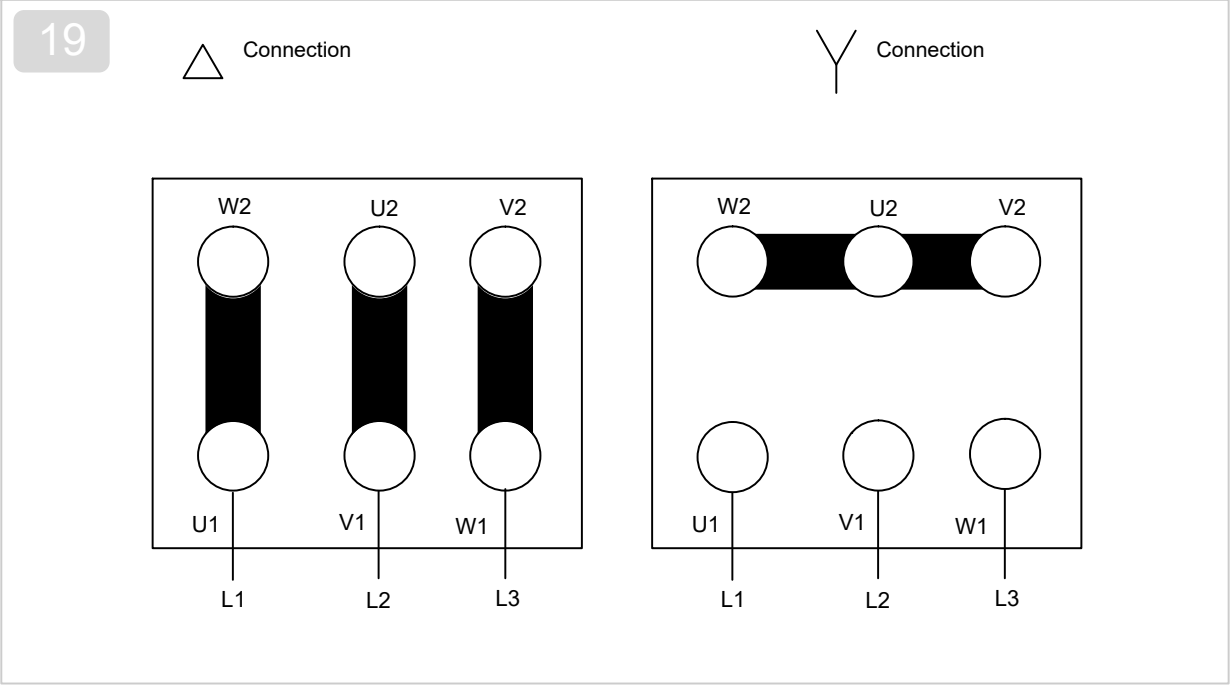

Delta connection

Star connection

The motor nameplate sets the connection.

The diagram shows delta and star terminal arrangements for a three-phase motor. Listed supply is 400 V, 50 Hz. Use the voltage rating, terminal arrangement and connection instructions supplied with the actual selected motor.

Connect protective earth, verify rotation during commissioning and specify protection for the actual motor rating and installation. This is a terminal reference, not a complete control-panel or protective-device design.

Motor configuration: 2 poles / Class F / IP55 / TEFC / IE2. All nine catalogue models are three phase; no single-phase connection or capacitor rating is inferred.

VHPF

High pressure industrial centrifugal fans



info@voltvent.com | voltvent.com