VOLTVENT®
VENTILATION SYSTEMS

VOBR SERIES

Single inlet centrifugal blowers

VOBR

FORWARD-CURVED / RADIAL OPTIONS

POWDER-COATED STEEL CASING



550-2700	11	50 Hz
Nominal airflow / m^3/h	Models in the range	Single / three phase

info@voltvent.com | voltvent.com

01 / PRODUCT OVERVIEW

Compact form. Industrial airflow.



01 Single-inlet scroll casing

Powder-coated sheet-metal construction with a rectangular discharge flange. The product photograph illustrates a protective inlet grille.

02 Two impeller configurations

Forward-curved galvanized-steel impellers serve the standard models. VOBR 200M-2P* is the separate radial-blade listed variant.

03 Motor outside the airstream

For industrial machinery, local ventilation, workshops, warehouses and greenhouses. Match the motor supply and flange dimensions to the selected model.

SELECTION & PERFORMANCE

Select the model at your duty point.

Use the individual static-pressure curves to match airflow and system resistance. Nominal power, speed, current and airflow are ratings; operating values vary with duty. The curves represent the supplied 50 Hz condition.

Selection parameter	Technical overview
Nominal airflow range	550-2700 m^3/h
Nominal input power	130-1500 W
Electrical supply	230 V / 1 phase or 400 V / 3 phase / 50 Hz
Motor configurations	2 or 4 poles / size-specific motor protection
Motor operating range	-20 to +40 °C
Maximum transported-air temperature	+120 °C

Performance data. Motor ambient limits and transported-air temperature are separate ratings.

02 / TECHNICAL DATA

Compare the complete range.

NOMINAL RATINGS / 50 Hz

Model	Supply V / phase	Airflow m^3/h	Input W	Speed rpm	Current A	Weight kg	Sound pressure dB(A) / 3 m
VOBR 140M-2P	230 / 1	1100	200	2930	1.15	7.7	53
VOBR 140M-4P	230 / 1	550	150	1475	1.10	7.7	45
VOBR 200M-2P	230 / 1	1800	400	2900	2.00	9.0	55
VOBR 200M-2P*	230 / 1	1700	200	2950	1.20	9.3	55
VOBR 200T-2P	400 / 3	1800	380	2900	1.10	8.3	60
VOBR 200M-4P	230 / 1	850	150	1475	1.10	8.4	50
VOBR 200T-4P	400 / 3	850	130	1475	0.60	8.4	55
VOBR 260M-2P	230 / 1	2700	1500	2820	9.80	9.5	72
VOBR 260T-2P	400 / 3	2700	1500	2820	3.30	11.2	72
VOBR 260M-4P	230 / 1	1450	320	1350	1.50	12.8	66
VOBR 260T-4P	400 / 3	1450	300	1350	0.65	9.8	66

Airflow is the nominal maximum, not a selected duty point. Input power, current and speed are nominal ratings; operating values vary with duty. Sound pressure is a selection data at 3 m; no sound-power or octave-band data are supplied.

SIZE-SPECIFIC MOTOR DATA

Casing sizes	Insulation	Protection	Cooling	Efficiency
140 / 200	Class B	IP44	TEAO	IE1
260	Class F	IP55	TEFC	IE2

* VOBR 200M-2P* denotes the radial-blade variant. M = single phase; T = three phase. 2P / 4P = two / four poles. All models: motor operating range -20 to +40 °C; maximum transported-air temperature +120 °C.

03 / AIR PERFORMANCE / 1 OF 2

Fan Performance Curves

VOBR 140M-2P

230 V / 1 phase / 50 Hz / 200 W nominal

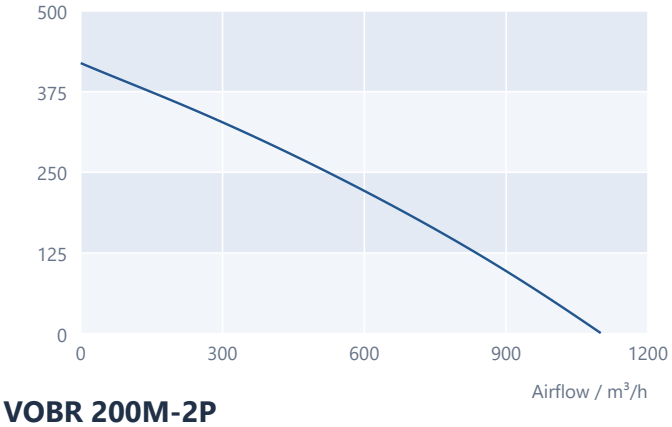

VOBR 140M-4P

230 V / 1 phase / 50 Hz / 150 W nominal

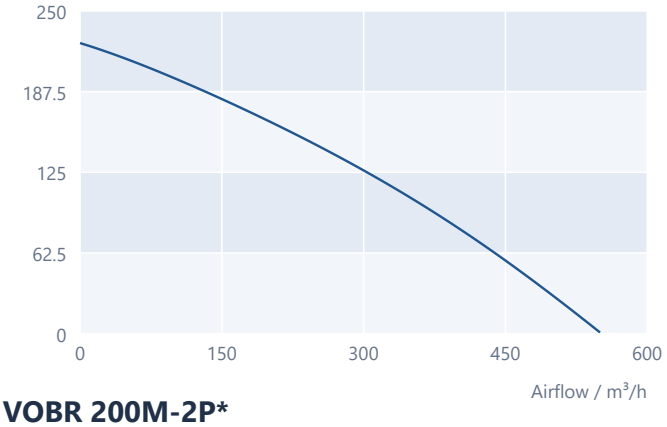

VOBR 200M-2P

230 V / 1 phase / 50 Hz / 400 W nominal

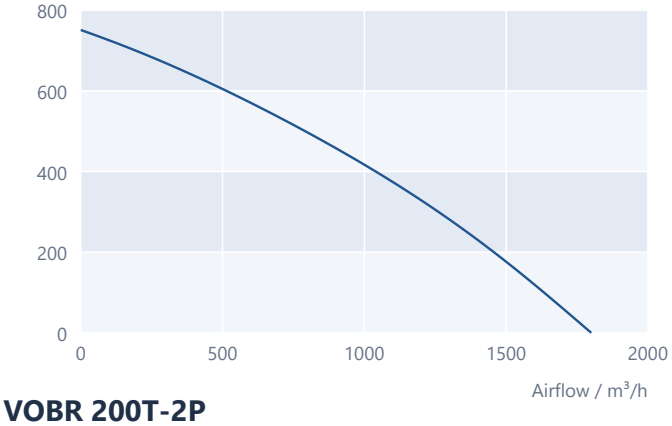

VOBR 200M-2P*

230 V / 1 phase / 50 Hz / 200 W nominal

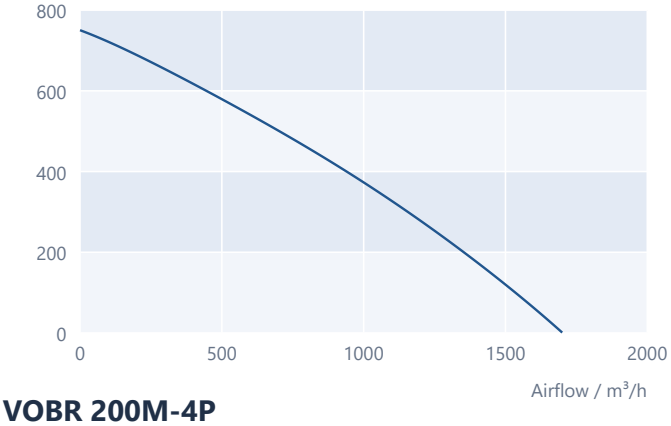

VOBR 200T-2P

400 V / 3 phase / 50 Hz / 380 W nominal

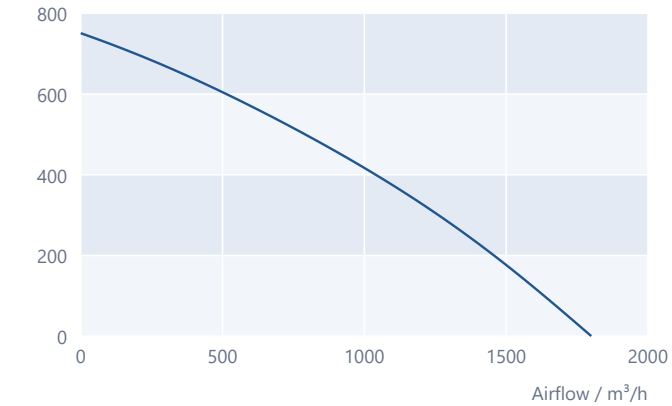

VOBR 200M-4P

230 V / 1 phase / 50 Hz / 150 W nominal

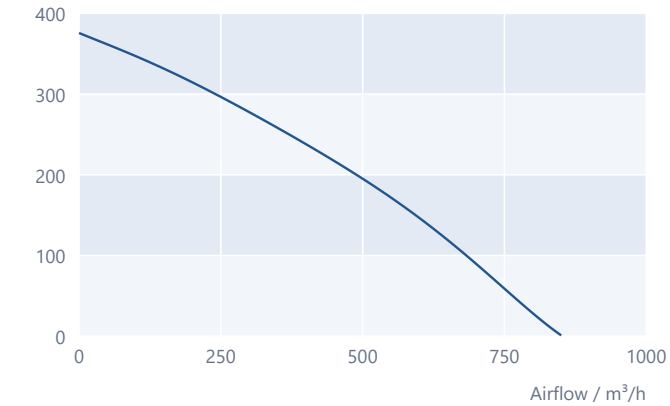

Model-specific scales. Listed static-pressure curves remain within their supplied airflow domains, without extrapolation or rescaling. Nominal table ratings and selected operating values are distinct.

03 / AIR PERFORMANCE / 2 OF 2

Fan Performance Curves

VOBR 200T-4P

400 V / 3 phase / 50 Hz / 130 W nominal

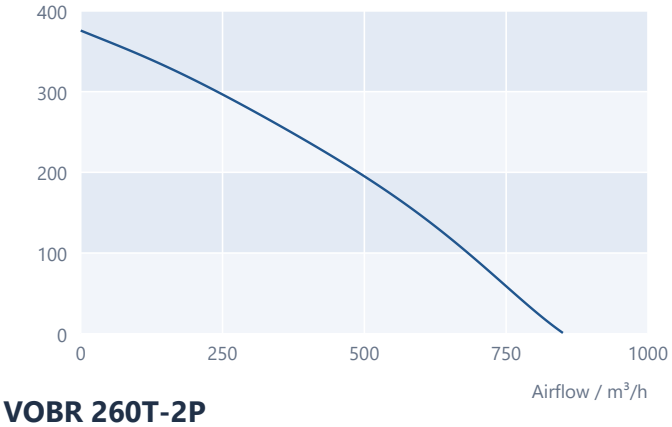

VOBR 260M-2P

230 V / 1 phase / 50 Hz / 1500 W nominal

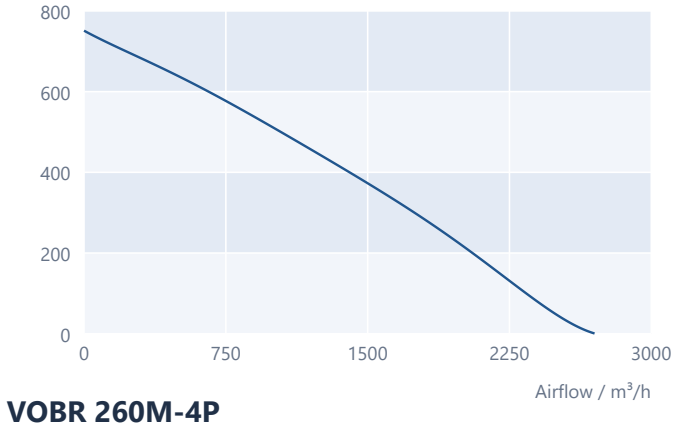

VOBR 260T-2P

400 V / 3 phase / 50 Hz / 1500 W nominal

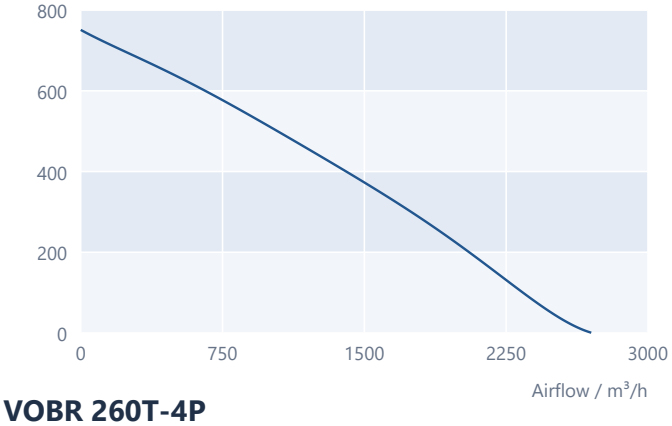

VOBR 260M-4P

230 V / 1 phase / 50 Hz / 320 W nominal

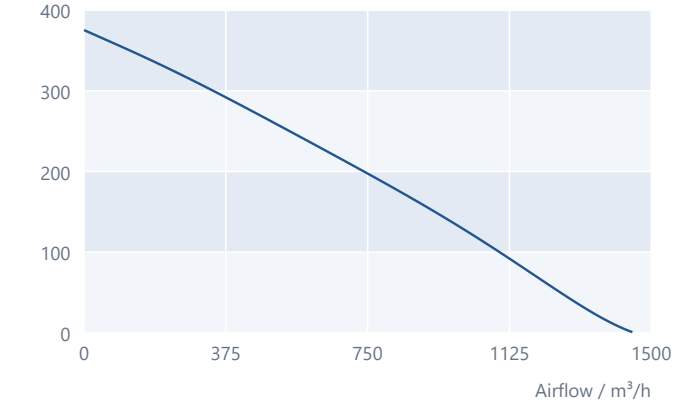

VOBR 260T-4P

400 V / 3 phase / 50 Hz / 300 W nominal

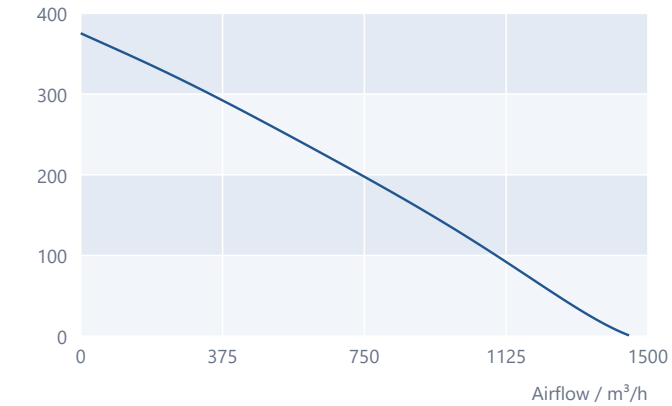

READING THE CURVES

Match airflow and pressure.

Use the scale on each model chart. Confirm the duty point and operating motor values in FSP, allowing for losses in the connected system.

The starred 200M-2P* curve belongs to the separate radial-blade configuration.

Model-specific scales. Listed static-pressure curves remain within their supplied airflow domains, without extrapolation or rescaling. Nominal table ratings and selected operating values are distinct.

04 / DIMENSIONAL DATA / 140 CASING

Plan the discharge connection.

VOBR 140 / ORIGINAL DATA DRAWING

All dimensions in mm

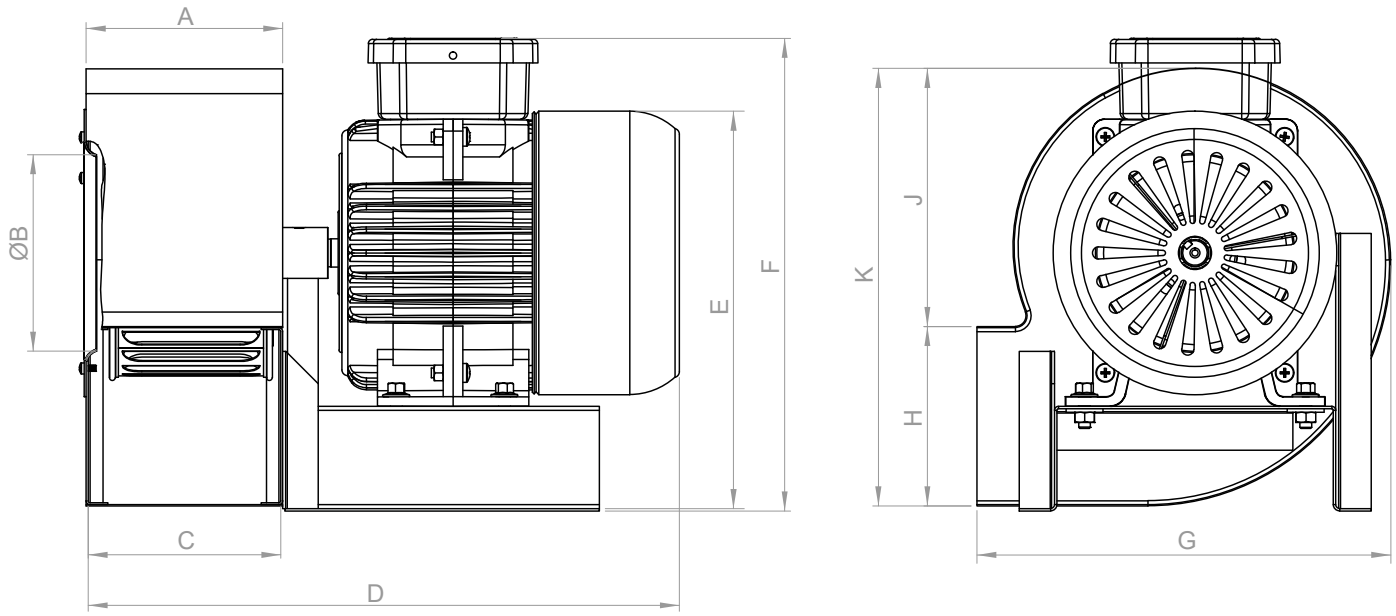

Casing	A	B	C	D	E	F	G	H	J	K
VOBR 140	103	106	102	294	200	240	204	91	125	216

DISCHARGE REFERENCE

102 x 91 mm

Nominal listed profile: 102 x 91 mm.
Drawing opening: C x H = 102 x 91 mm.

Dimensions apply to both 140 motor variants. Original vector geometry, labels and dimension values are preserved. Confirm the actual unit flange and mounting orientation before installation.

04 / DIMENSIONAL DATA / 200 CASING

Plan the discharge connection.

VOBR 200 / ORIGINAL DATA DRAWING

All dimensions in mm

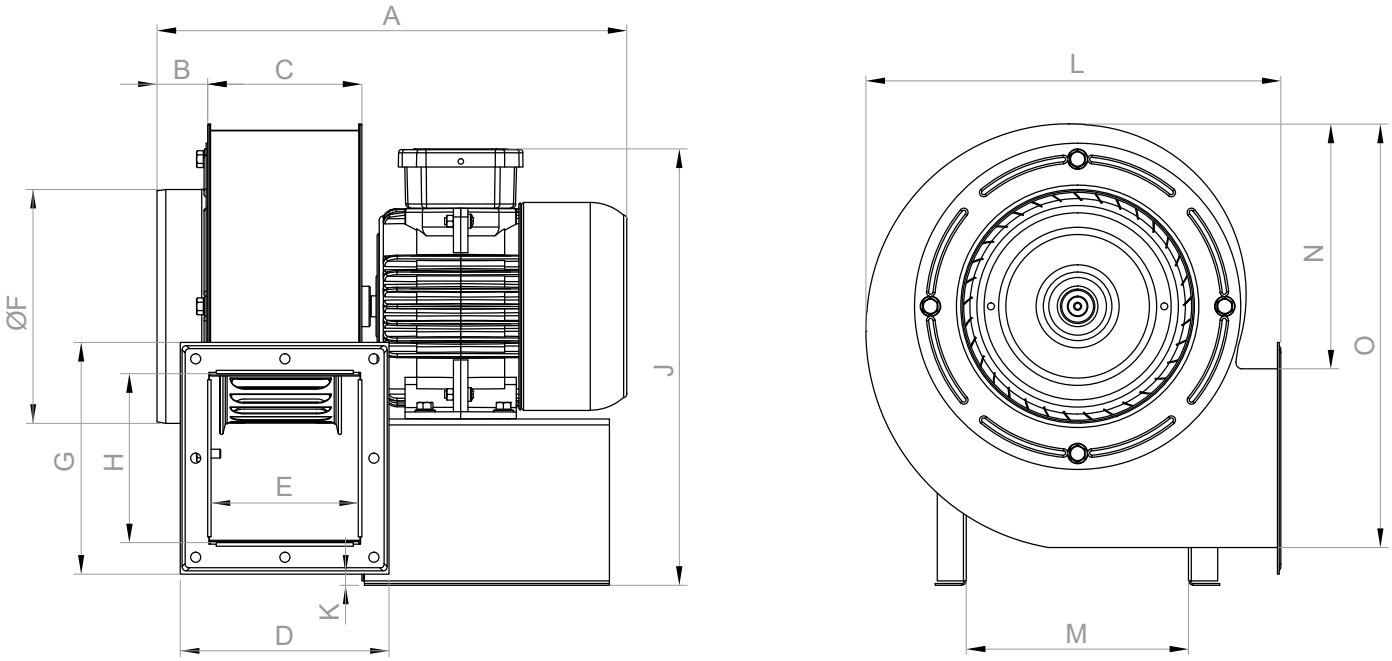

Casing	A	B	C	D	E	F	G	H	J	K	L	M	N	O
VOBR 200	322	34	109	146	102	163	161	115	310	17	288	150	170	295

DISCHARGE REFERENCE

125 x 102 mm

Nominal listed profile: 125 x 102 mm.
Drawing opening: E x H = 102 x 115 mm.

Dimensions apply to all five 200 variants. The nominal profile and drawing opening are distinct selection datas and differ for this casing. Confirm the actual flange before designing a mating connection.

04 / DIMENSIONAL DATA / 260 CASING

Plan the discharge connection.

VOBR 260 / ORIGINAL DATA DRAWING

All dimensions in mm

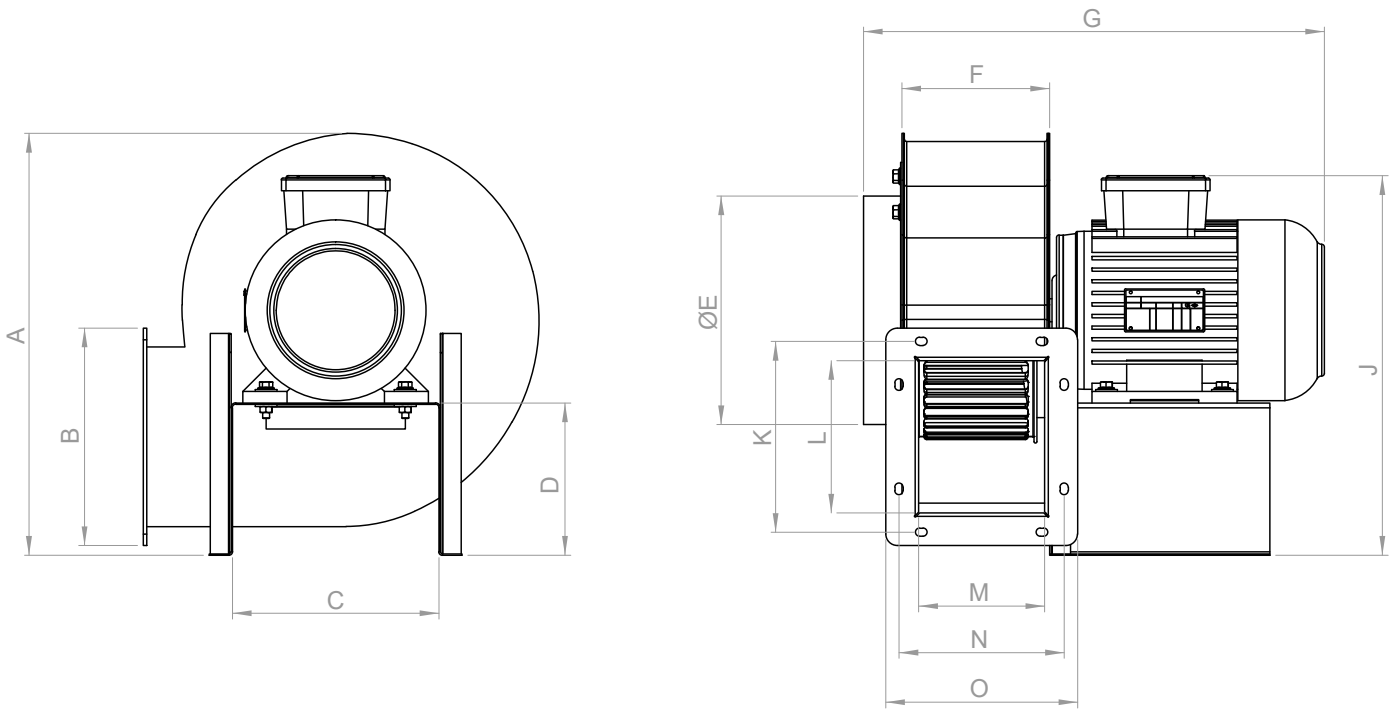

Casing	A	B	C	D	E	F	G	J	K	L	M	N	O
VOBR 260	361	194	155	119	197	128	405	327	162	137	115	140	163

DISCHARGE REFERENCE

137 x 115 mm

Nominal listed profile: 137 x 115 mm.
Drawing opening: M x L = 115 x 137 mm.

Dimensions apply to all four 260 variants. Drawing width M and height L describe the listed profile in the opposite order. Original vector labels are retained; no H dimension is supplied for this casing.

05 / INSTALLATION & MOTOR

Match motor and installation.

01 Mounting and airflow

Use the casing-specific drawing and confirm the actual rectangular discharge flange. Fix the blower to a rigid support, keep the inlet and discharge clear, and provide suitable guards for accessible moving parts.

02 Supply and speed control

M models use 230 V single-phase motors; T models use 400 V three-phase motors. Compatible voltage regulation can be used on the single-phase range, and compatible inverter control on the three-phase range. Confirm motor and controller suitability.

03 Temperature and motor cooling

Maximum transported-air temperature is +120 °C; motor operating range is -20 to +40 °C. The motor sits outside the airstream. Maintain motor cooling, isolate power before servicing and follow the supplied motor nameplate. Continuous duty: S1.

SINGLE-PHASE CAPACITOR RATINGS

Model	Capacitance / µF	Component rating / V
VOBR 140M-2P	8	400
VOBR 140M-4P	8	400
VOBR 200M-2P	7	400
VOBR 200M-2P*	6	400
VOBR 200M-4P	6	400
VOBR 260M-2P	40	400
VOBR 260M-4P	8	400

Capacitor voltage is the component rating; the single-phase supply remains 230 V. The next page contains the two diagrams supplied for the 140 models. Diagrams for the 200 and 260 models were not supplied.

06 / ELECTRICAL CONNECTION

Single-phase connections.

VOBR 140M-2P / LAYOUT 11 / 230 V / 50 Hz

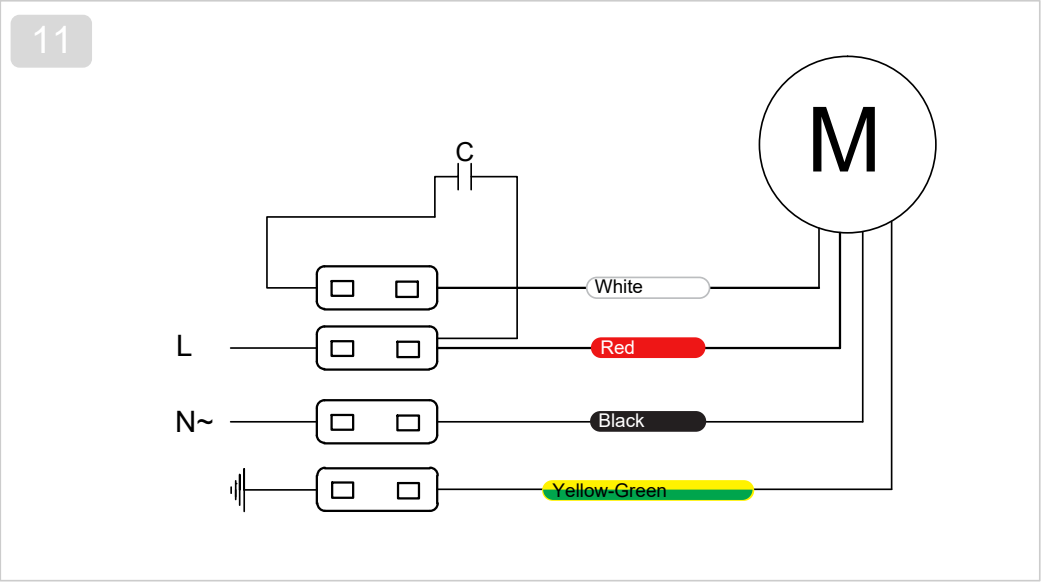

VOBR 140M-4P / LAYOUT 10 / 230 V / 50 Hz

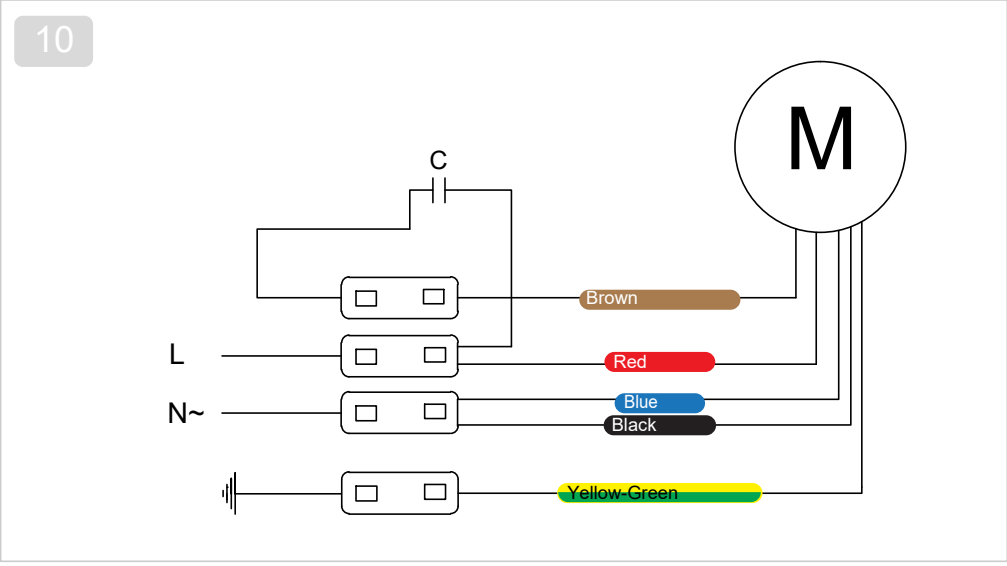

Conductor colours and connection topology are preserved; bilingual labels are translated into English. L / N = line / neutral; C = capacitor. Confirm the actual motor nameplate and supplied terminal diagram before connection.

No listed electrical diagrams were supplied for VOBR 200 or 260. Use the diagram supplied with the selected unit. Electrical work must be performed by qualified personnel.

VOBR

Single inlet centrifugal blowers

info@voltvent.com | voltvent.com