VACT-F SERIES

Carbon Filtered Duct Fan

VACT-F

METAL GREASE / G4 / ACTIVATED CARBON

CARBON FILTERED DUCT FAN

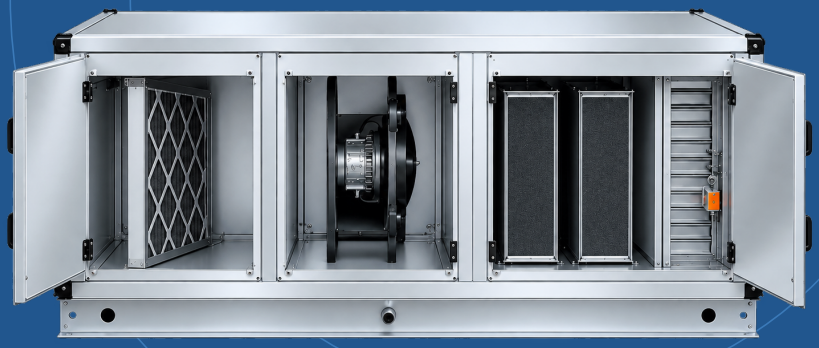

2400-7200	05	50 Hz
Nominal airflow / m^3/h	Models in the range	Single / three phase

01 / PRODUCT OVERVIEW

Carbon Filtered Duct Fan

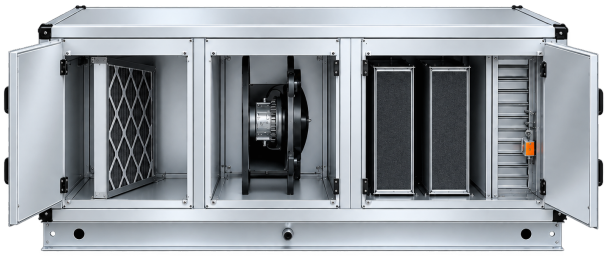

01 Three standard filter stages

A metal grease filter, a G4 dust prefilter and activated carbon cartridges form the standard filter arrangement for commercial duct ventilation.

02 Accessible fan and filter sections

The galvanized-steel cabinet houses a centrifugal impeller. Fan and filter sections are mounted on slides for access during cleaning and maintenance.

03 Options for the application

Filter options are assessed to suit customer requirements. F5 bag filters and other suitable filter types can be incorporated into the unit on request.

SERVICEABLE CABINET

The series combines fan and filtration within one duct cabinet. Allow clear access to the removable fan and filter sections. Dimensions depend on the selected model.

FILTER ARRANGEMENT

Filter stage / option	Availability
Metal grease filter	Standard
G4 dust prefilter	Standard
Activated carbon cartridges	Standard
F5 bag filter / other suitable filters	Optional - on request

Odour reduction depends on the contaminant, airflow and filter condition. Confirm the installation pressure reserve and allow access for filter replacement and fan cleaning.

02 / TECHNICAL DATA

Select the fan configuration.

FIVE ELECTRICAL CONFIGURATIONS / 50 Hz

Model	Airflow m³/h	Nominal power W	Speed rpm	Supply V / phase	Noise level dB(A)
VACT-F 400M	2400	380	1362	230 / 1	45
VACT-F 450M	3300	690	1367	230 / 1	48
VACT-F 500M	5200	830	1364	230 / 1	52
VACT-F 500T	5200	830	1364	380 / 3	52
VACT-F 560T	7200	1460	1369	380 / 3	55

RATING BASIS

Published airflow, power and speed are nominal catalogue values at 0 Pa. The data provide no duty-dependent input-power, speed or efficiency curves. The 500M and 500T configurations share the same published size-500 air-performance curve.

MOTOR AND OPERATING RANGE

Series parameter	Reference
Motor type	AC
Motor insulation / protection	Class F / IP44
Operating temperature	-20 to +50 °C

Noise values are listed by model; measurement type, distance and test conditions are not specified. Current and mass are not stated in the verified model records.

03 / AIR PERFORMANCE

Fan Performance Curves

VACT-F 400M

230 V / 1 phase / 50 Hz

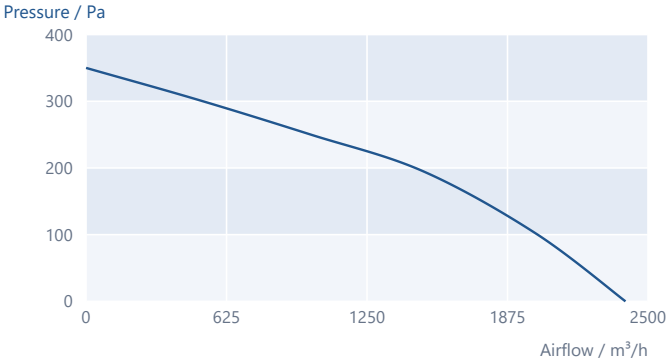

VACT-F 450M

230 V / 1 phase / 50 Hz

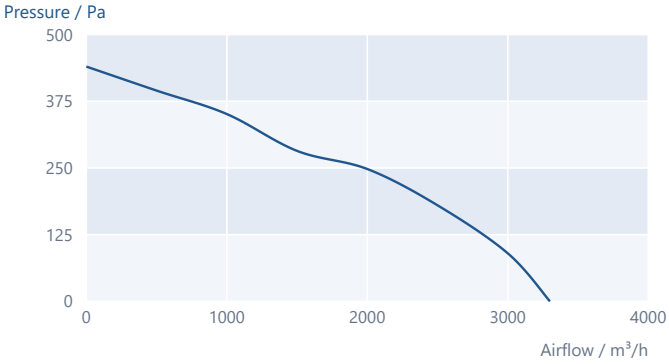

VACT-F 500M

230 V / 1 phase / 50 Hz

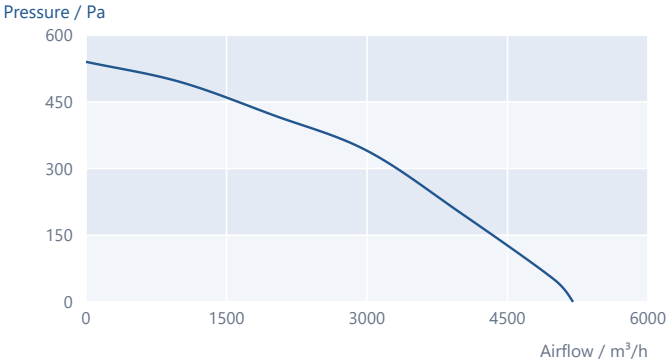

VACT-F 500T

380 V / 3 phase / 50 Hz

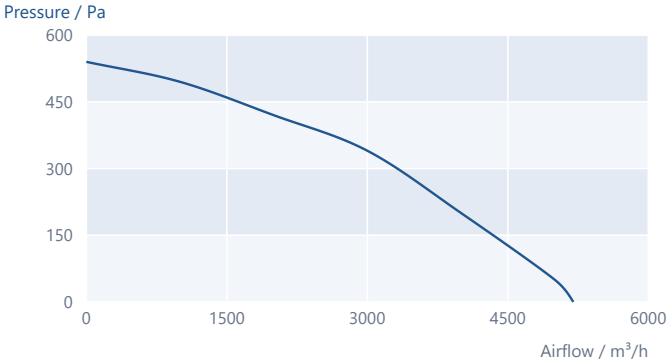

VACT-F 560T

380 V / 3 phase / 50 Hz

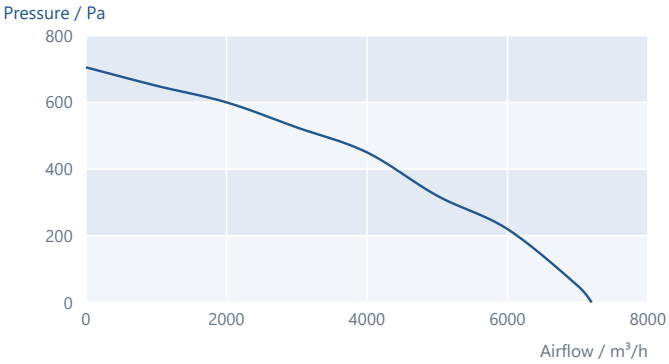

READING THE CURVES

Each chart has its own scale. The 500M and 500T plots retain the same published curve, with separate model and supply labels.

Allow for the resistance of the connected system and filter condition when selecting the operating point. No loaded-filter correction is inferred.

Curves reproduce the published series data without re-fitting or extrapolation. Curve endpoints may differ slightly from rounded nominal airflow ratings.

04 / DIMENSIONS

Plan the installation.

ORIGINAL SERIES OUTLINE / TWO VIEWS

All dimensions in mm

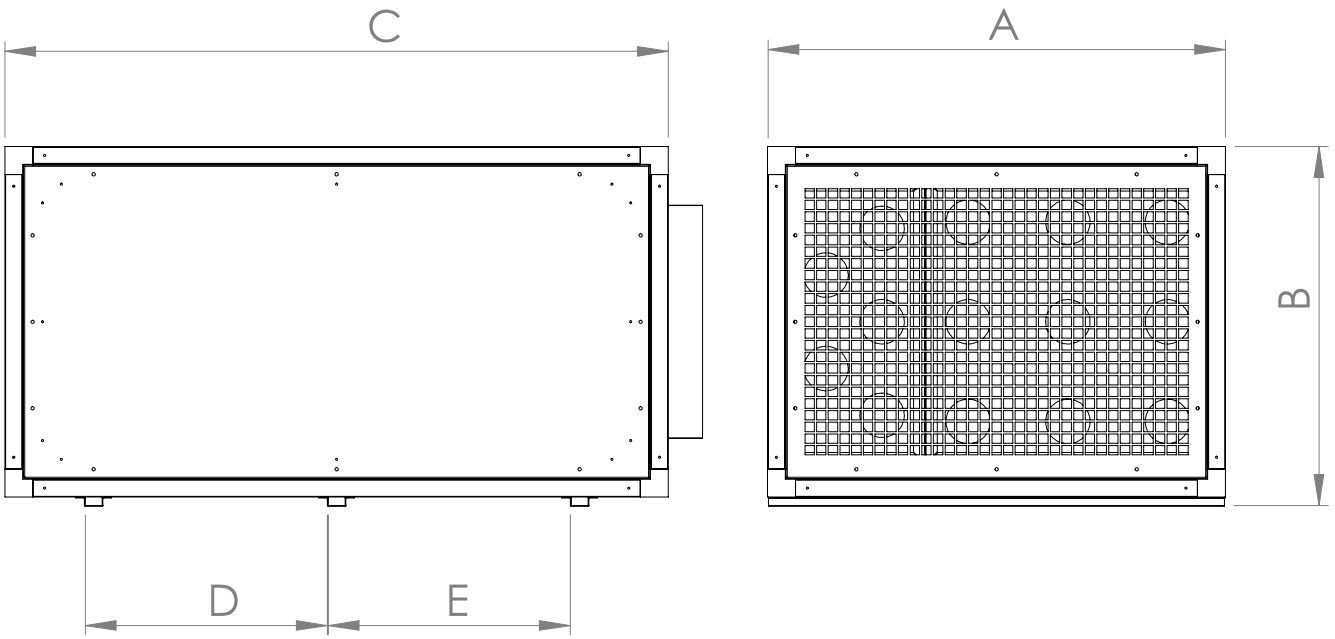

Model	A	B	C	D	E
VACT-F 400M	665	750	1420	520	520
VACT-F 450M	665	750	1420	520	520
VACT-F 500M	980	750	1420	520	520
VACT-F 500T	980	750	1420	520	520
VACT-F 560T	980	750	1420	520	520

Original mechanical geometry and A-E dimension definitions are retained. Match the selected model to the table; do not scale the drawing. Provide separate clearance for filter withdrawal, fan cleaning and electrical access.

05 / ELECTRICAL CONNECTION

Electrical connections.

SINGLE-PHASE / 230 V

VACT-F 400M / 450M / 500M

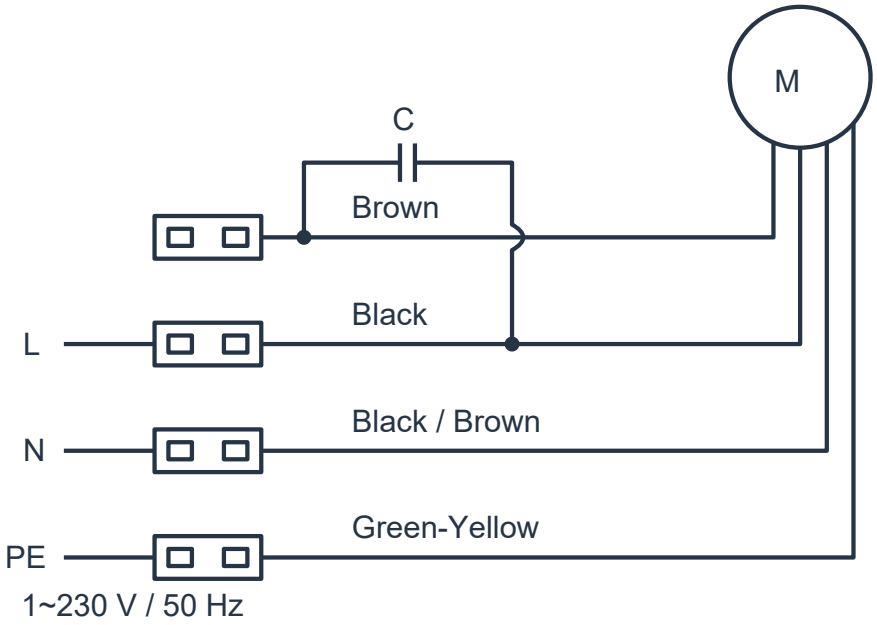

THREE-PHASE / 380 V

VACT-F 500T / 560T

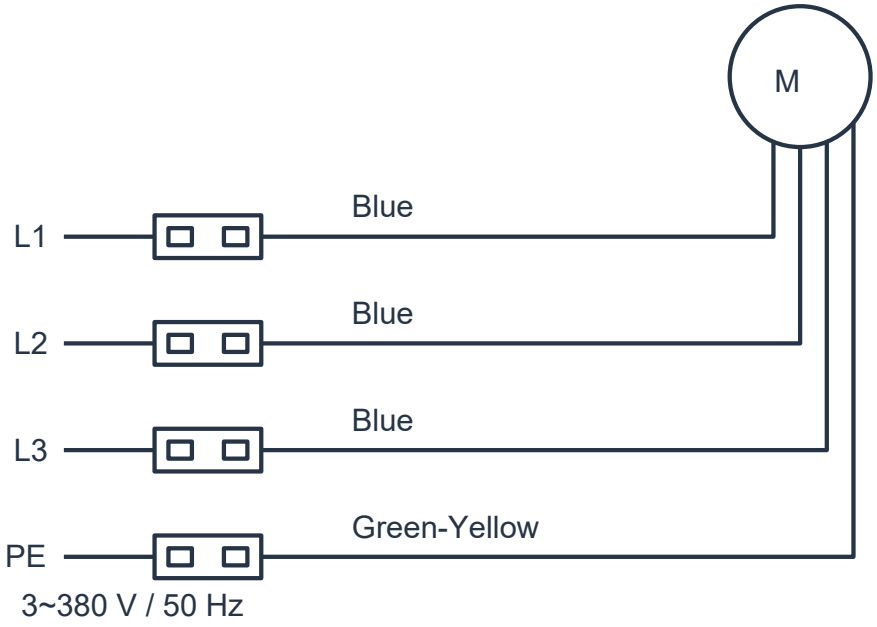

Use the connection diagram for the selected supply. C: capacitor. PE: protective earth. Isolate the supply before service and follow the motor terminal identification.

VACT-F

Carbon Filtered Duct Fan

VOLTVENT®
VENTILATION SYSTEMS