VBF SERIES

Rectangular inline duct fans

VBF

BACKWARD-CURVED IMPELLER

GALVANIZED STEEL CASING

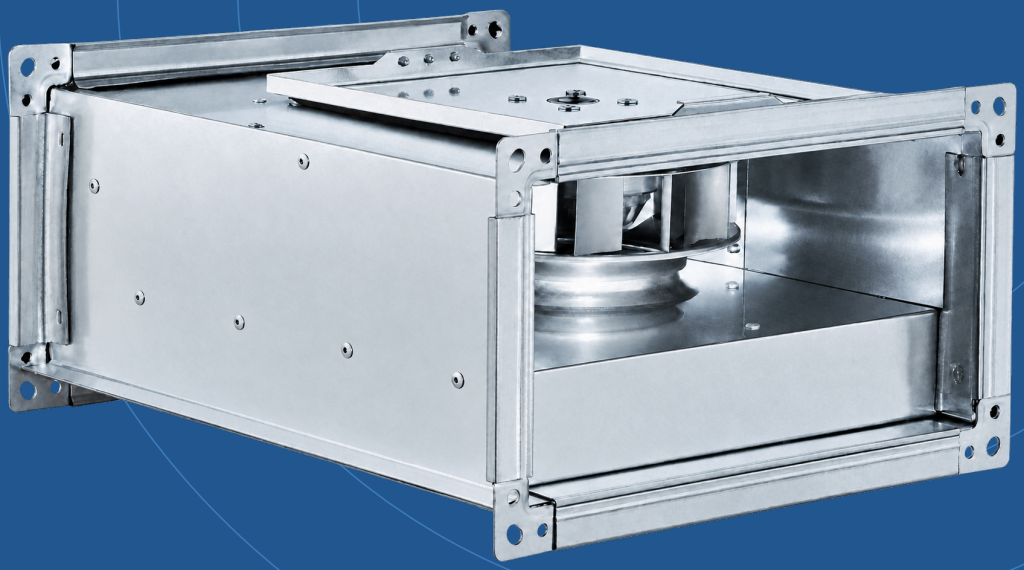

300 x 150 - 1000 x 500
Duct size range / mm

09
Models in the range

50 Hz
Single / three phase

01 / PRODUCT & TECHNICAL DATA

Compact form. Clear construction.

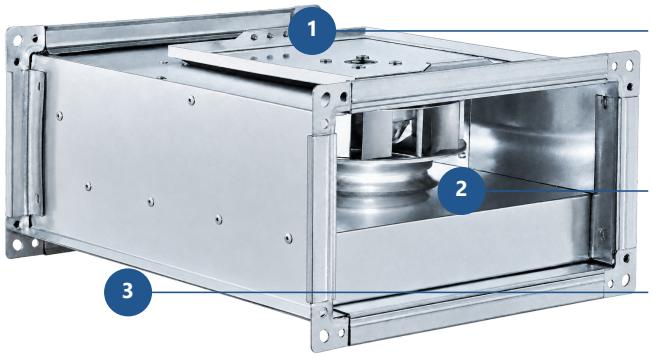

01 Service access

Access lid for inspection and maintenance of the motor and impeller assembly.

02 Centrifugal impeller

Backward-curved blades driven directly by an external-rotor motor.

03 Rectangular steel casing

Galvanized sheet-steel construction with duct connection flanges.

MODEL SPECIFICATIONS

Nominal reference values / 50 Hz

Model	Duct / mm	Max. airflow* m^3/h	Power W	Current A	Speed rpm	Supply V / phase	Weight kg
VBF 30-15M	300x150	450	75	0.37	2450	230 / 1	7
VBF 40-20 A	400x200	950	130	0.55	2650	230 / 1	10.5
VBF 40-20 B	400x200	1150	165	0.73	2650	230 / 1	11
VBF 50-25	500x250	1610	240	1.1	2600	230 / 1	15
VBF 60-30	600x300	1850	190	0.85	1440	230 / 1	29
VBF 60-35M B	600x350	3300	250	1.15	1400	230 / 1	32
VBF 70-40M B	700x400	5400	660	3	1350	230 / 1	46
VBF 80-50T	800x500	7550	1150	2.5	1400	400 / 3	84
VBF 100-50T	1000x500	9600	2000	3.8	1300	400 / 3	84

* Maximum airflow is the upper limit of the supplied performance-curve range, rounded to whole m^3/h; it is not a selected duty-point value. Other ratings are nominal references at 50 Hz. Actual power, current and speed depend on the operating point. Match the model-specific electrical supply to the installation.

02 / AIR PERFORMANCE / 01

Fan Performance Curves

VBF 30-15M

1~230 V / 50 Hz

Static pressure / Pa

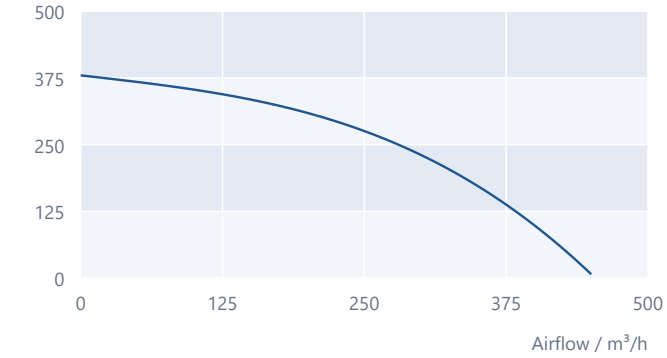

VBF 40-20 A

1~230 V / 50 Hz

Static pressure / Pa

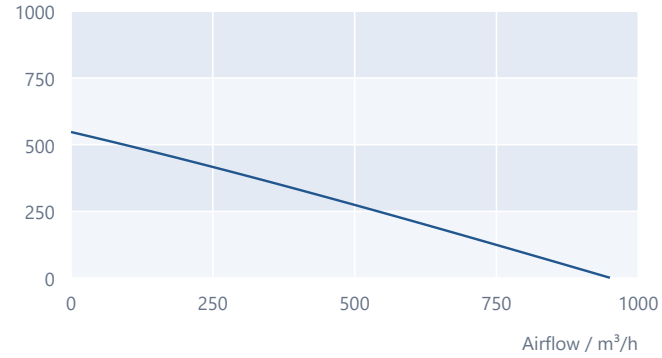

VBF 40-20 B

1~230 V / 50 Hz

Static pressure / Pa

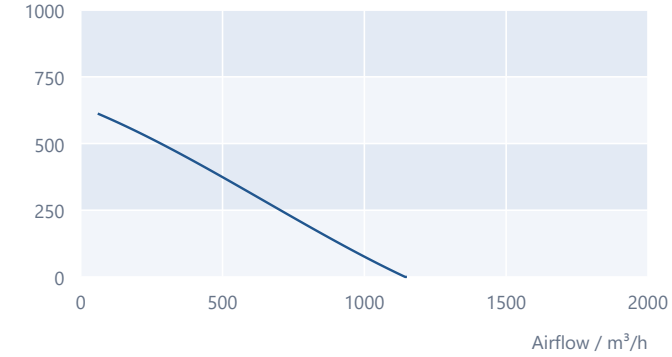

VBF 50-25

1~230 V / 50 Hz

Static pressure / Pa

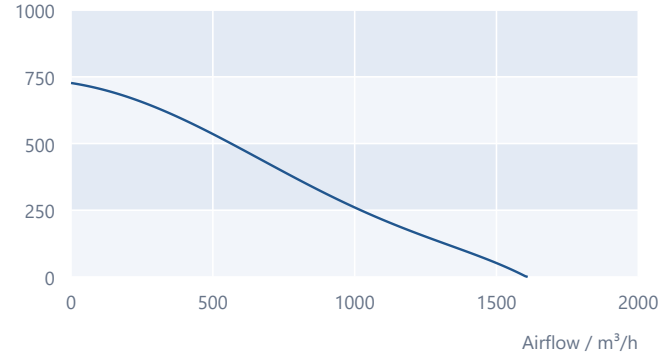

VBF 60-30

1~230 V / 50 Hz

Static pressure / Pa

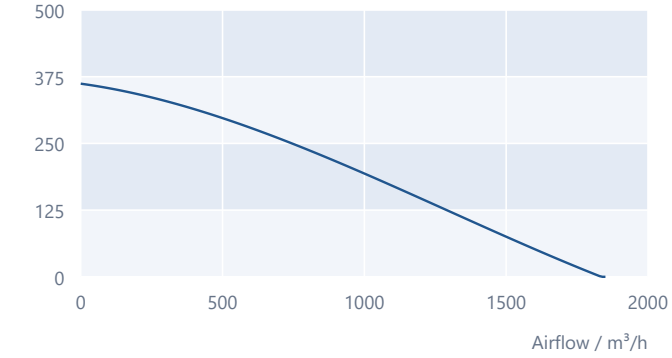

Model-specific axis scales. Listed 50 Hz curves shown only within their ranges.

02 / AIR PERFORMANCE / 02

Fan Performance Curves

VBF 60-35M B

1~230 V / 50 Hz

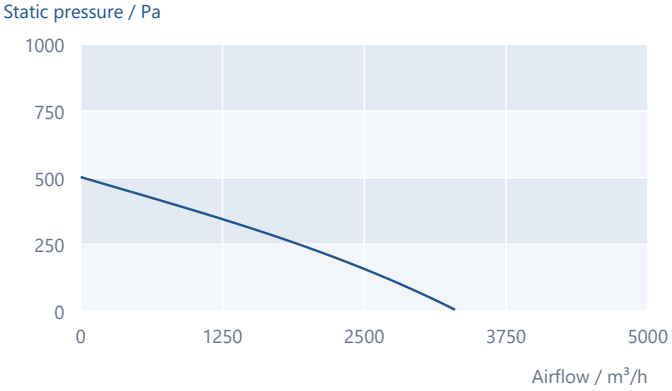

VBF 70-40M B

1~230 V / 50 Hz

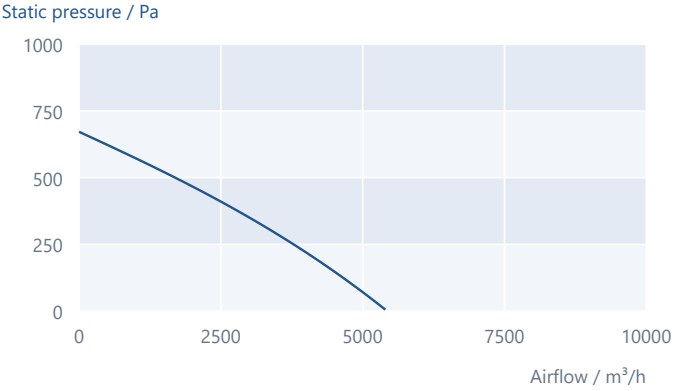

VBF 80-50T

3~400 V / 50 Hz

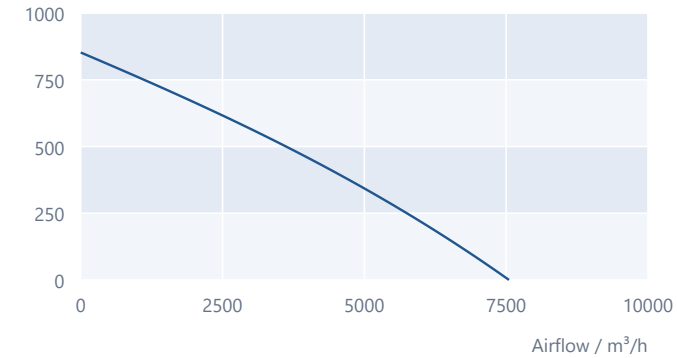

VBF 100-50T

3~400 V / 50 Hz

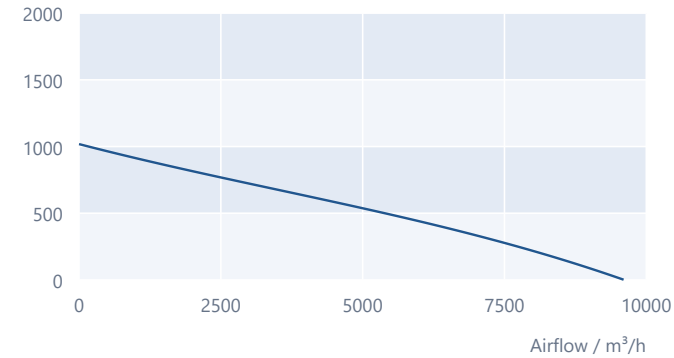

Model-specific axis scales. Listed 50 Hz curves shown only within their ranges.

03 / DIMENSIONAL DATA

Plan the installation.

FAMILY DRAWING

All dimensions in mm

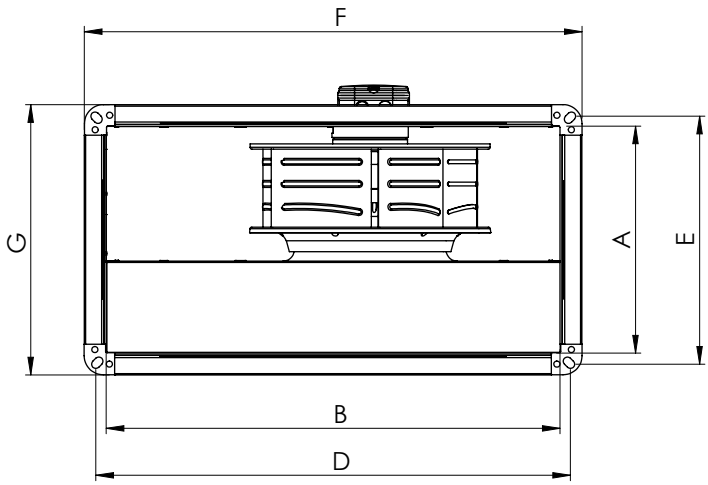

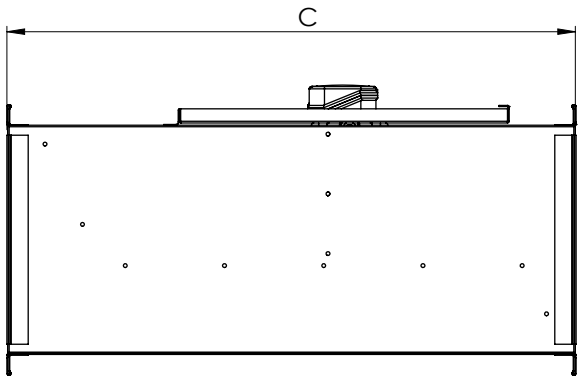

Model	A	B	C	D	E	F	G
VBF 30-15M	150	300	400	320	170	350	200
VBF 40-20 A	200	400	500	420	220	450	250
VBF 40-20 B	200	400	500	420	220	450	250
VBF 50-25	250	500	565	520	270	550	300
VBF 60-30	300	600	750	620	320	660	360
VBF 60-35M B	350	600	750	620	370	660	410
VBF 70-40M B	400	700	800	720	420	770	470
VBF 80-50T	500	800	920	820	520	870	570
VBF 100-50T	500	1000	1050	1030	530	1070	570

Operating range: -20 to +40 °C. Maximum transported-air temperature: 40 °C. All model-specific flange and casing dimensions follow the Selection Program records.

04 / ELECTRICAL CONNECTION

Single-phase models.

1~230 V / 50 Hz

VBF 30-15M / 40-20 A / 40-20 B / 50-25 / 60-30 / 60-35M B

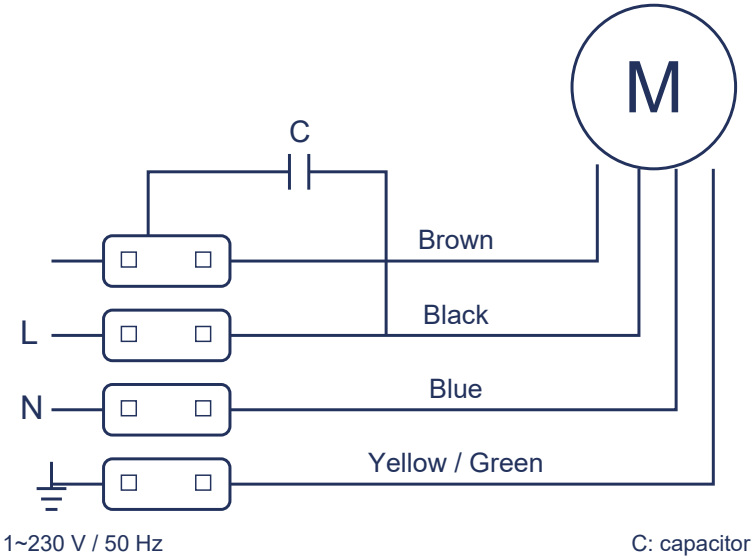

VBF 70-40M B / 1~230 V / 50 Hz

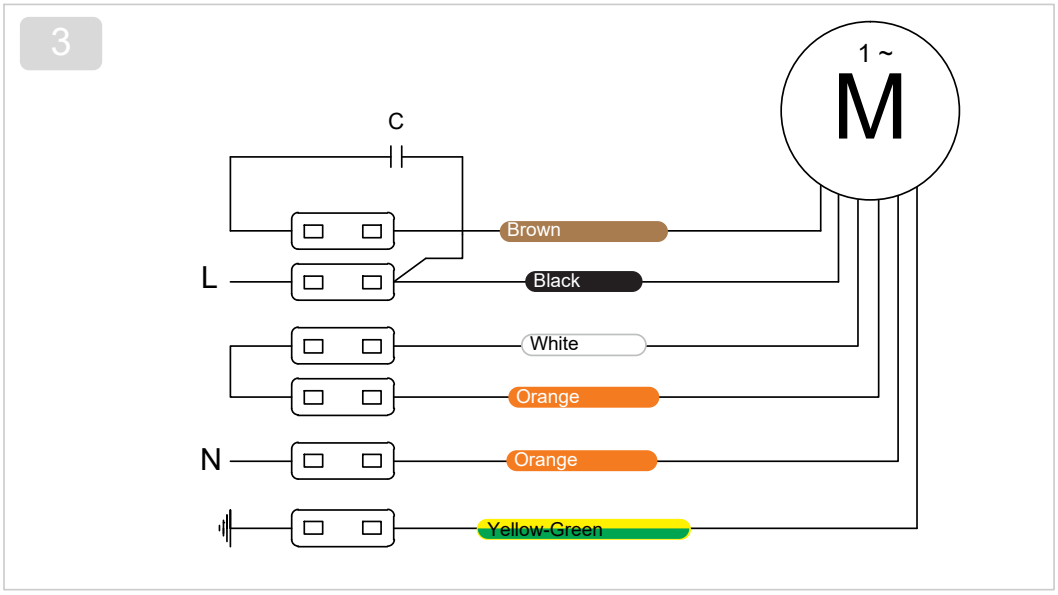

C: run capacitor. Follow the model-specific diagram supplied with the actual unit. Isolate the supply before servicing.

05 / ELECTRICAL CONNECTION

Three-phase models.

VBF 80-50T / VBF 100-50T

3~400 V / 50 Hz

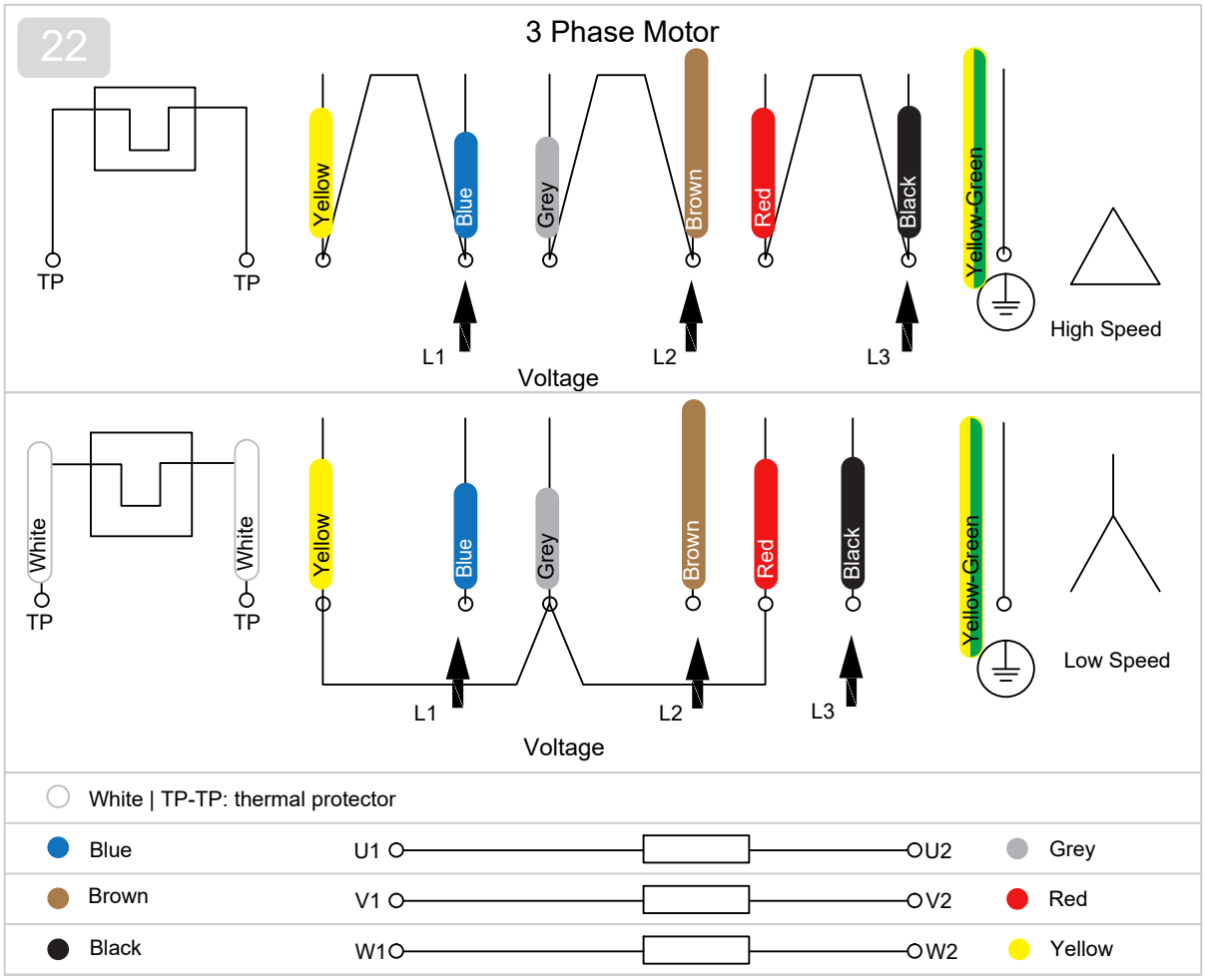

CONNECTION KEY

L1 / L2 / L3: phase conductors. TP / TP: thermal protector terminals. Protective earth: yellow-green.
Winding and terminal connections follow the original data diagram.

Motor protection: IP44. Insulation Class B: VBF 30-15M, 40-20 A, 40-20 B and 50-25. Insulation Class F: remaining models.

The diagram illustrates high-speed and low-speed winding configurations. Follow the actual motor nameplate and unit instructions when selecting a connection.

VBF

Rectangular inline duct fans

VOLTVENT®
VENTILATION SYSTEMS

info@voltvent.com | voltvent.com