VOLTVENT®
VENTILATION SYSTEMS

VMF SERIES

Mixed flow inline duct fans

VMF

MIXED FLOW

V0 PLASTIC CASING



100-315	07	50 Hz
Nominal duct size / mm	Models in the range	Single-phase AC

info@voltvent.com | voltvent.com

01 / PRODUCT & TECHNICAL DATA

Compact form. Clear construction.

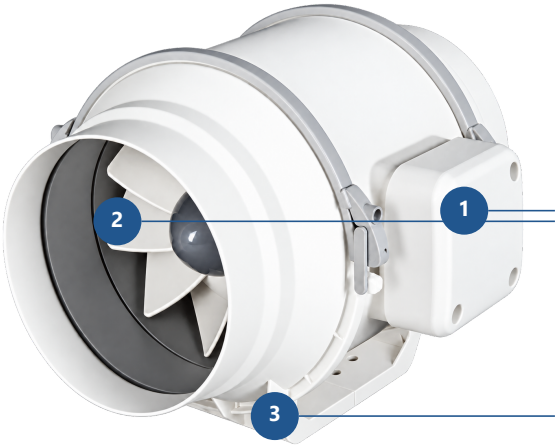

01 **Terminal box**

Accessible electrical connection on the side of the casing.

02 **Mixed-flow impeller**

Combines axial and centrifugal airflow characteristics.

03 **Plastic housing & mounting**

V0 plastic casing with circular duct connections and an integrated mounting base.

MODEL SPECIFICATIONS

Nominal reference values / 50 Hz

Model	Duct size mm	Max. airflow* m^3/h	Reference input power / W	Reference speed rpm	Weight kg	Protection
VMF 100	100	234	54	2460	1.8	IP44
VMF 125	125	337	56	2560	2	IP44
VMF 150	150	504	75	2490	2.7	IP44
VMF 160	160	560	75	2490	2.7	IP44
VMF 200	200	1012	111	2410	4.8	IP44
VMF 250	250	1300	280	2460	9.4	IP44
VMF 315	315	1970	476	2476	11	IP44

Single-phase 230 V / 50 Hz. Insulation Class F. Operating temperature: -20 to +50 °C.
* Maximum airflow is the upper limit of the supplied performance-curve range, rounded to whole m^3/h; it is not a selected duty-point value. Power and speed are catalogue reference ratings; weight follows the existing Voltvent catalogue.

02 / AIR PERFORMANCE / 01

Fan Performance Curves

VMF 100

1~230 V / 50 Hz

Static pressure / Pa

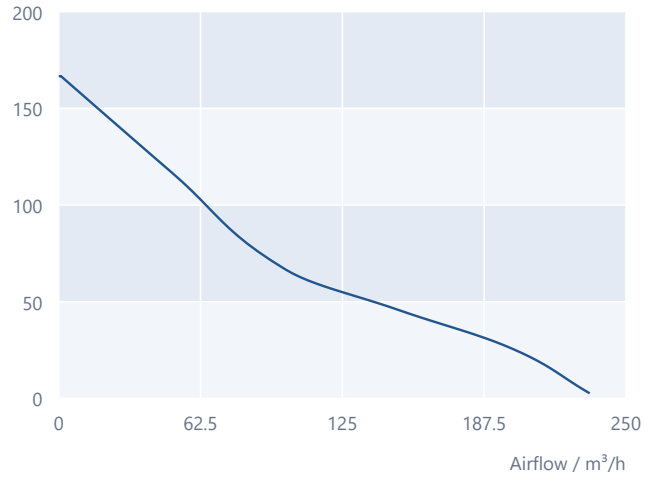

VMF 125

1~230 V / 50 Hz

Static pressure / Pa

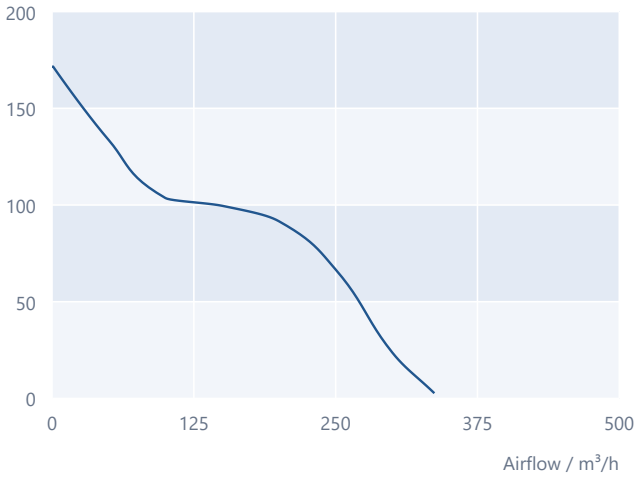

VMF 150

1~230 V / 50 Hz

Static pressure / Pa

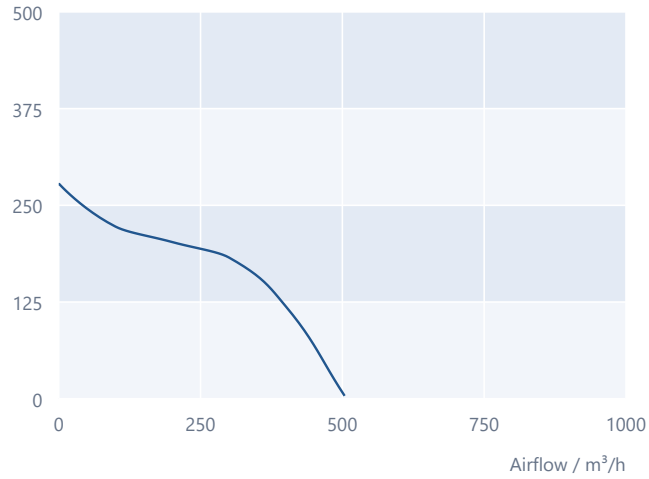

VMF 160

1~230 V / 50 Hz

Static pressure / Pa

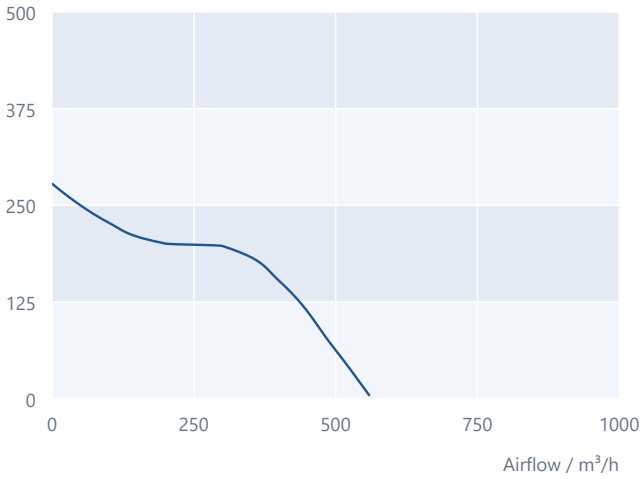

Model-specific axis scales. Listed 50 Hz curves shown only within their ranges. Maximum airflow and pressure are separate endpoints.

02 / AIR PERFORMANCE / 02

Fan Performance Curves

VMF 200

1~230 V / 50 Hz

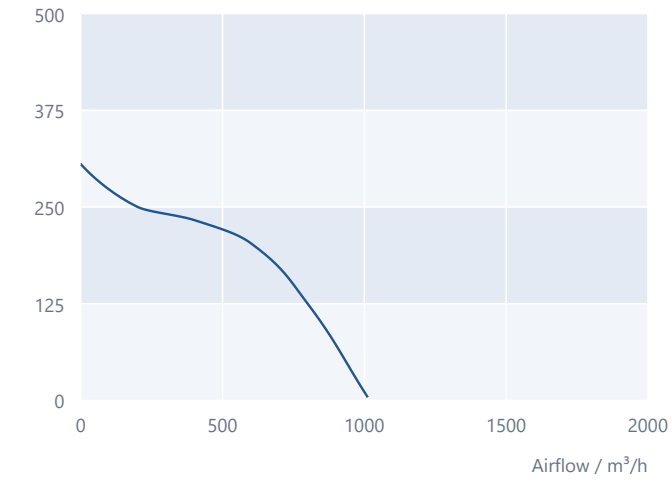

VMF 250

1~230 V / 50 Hz

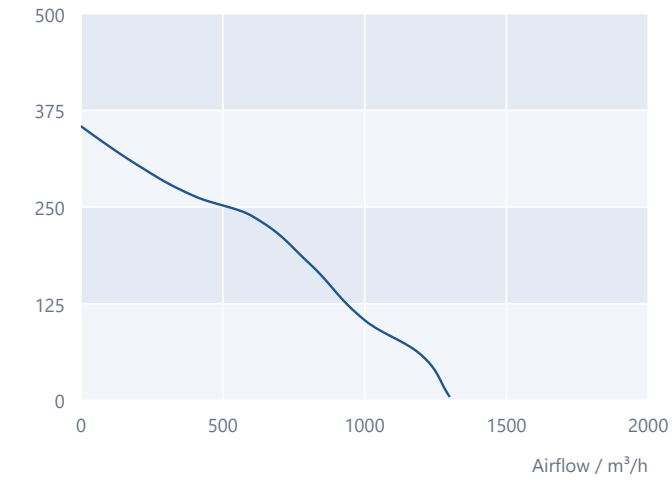

VMF 315

1~230 V / 50 Hz

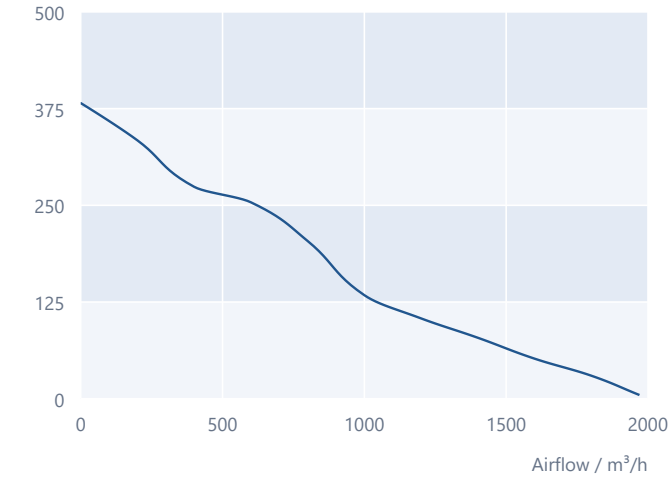

Model-specific axis scales. Listed 50 Hz curves shown only within their ranges. Maximum airflow and pressure are separate endpoints.

03 / DIMENSIONAL DATA

Plan the installation.

FAMILY DRAWING

All dimensions in mm

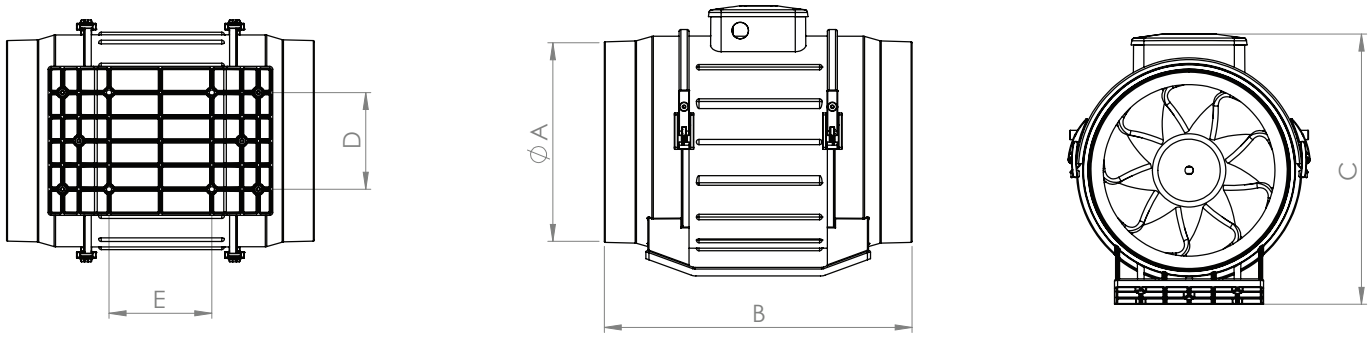

Model	A	B	C	D	E
VMF 100	96	306.5	215	60	80
VMF 125	121	260	215	60	80
VMF 150	146	290.5	242	60	80
VMF 160	156	271	242	60	80
VMF 200	191	300	263	94	100
VMF 250	246	393	325	110	140
VMF 315	310	450	420	175	180

VMF series / nominal duct sizes 100-315 mm

Family drawing. Dimension values follow the model records in Voltvent Selection Software.

04 / INSTALLATION & ELECTRICAL DATA

Designed for inline installation.

INSTALLATION

1 Circular duct connection

Match the nominal duct size to the system. Use dimensions A-E to plan connections and mounting space.

2 Horizontal or vertical mounting

Support the unit at its mounting base. Allow access to the terminal box and fan assembly for inspection and maintenance.

3 Supply & operating conditions

Single-phase 230 V / 50 Hz. Motor protection IP44; insulation Class F. Stated operating range: -20 to +50 °C.

MOTOR SELECTION DATA

Model	Nominal current A	Capacitor µF	Insulation class
VMF 100	0.5	2.5	F
VMF 125	0.5	2.5	F
VMF 150	0.6	4	F
VMF 160	0.6	4	F
VMF 200	0.64	5	F
VMF 250	1.07	6	F
VMF 315	1.6	8	F

Current and capacitor ratings follow the model records in Voltvent Selection Software. Review the nameplate and supplied instructions for the selected unit.

Use the wiring diagram supplied with the actual unit. Disconnect the electrical supply before inspection or maintenance.

05 / ELECTRICAL CONNECTION

Model-specific connections.

VMF 100 / 125 - TWO SPEEDS

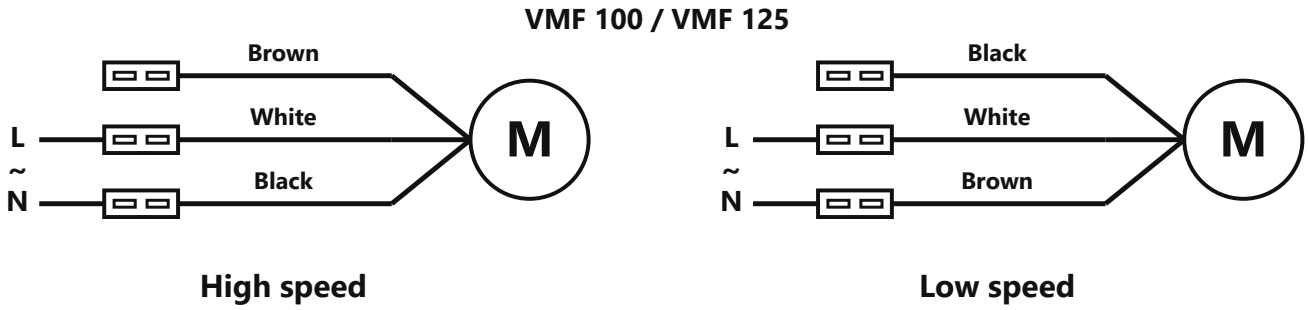

VMF 150 / 160 / 200 / 250 / 315

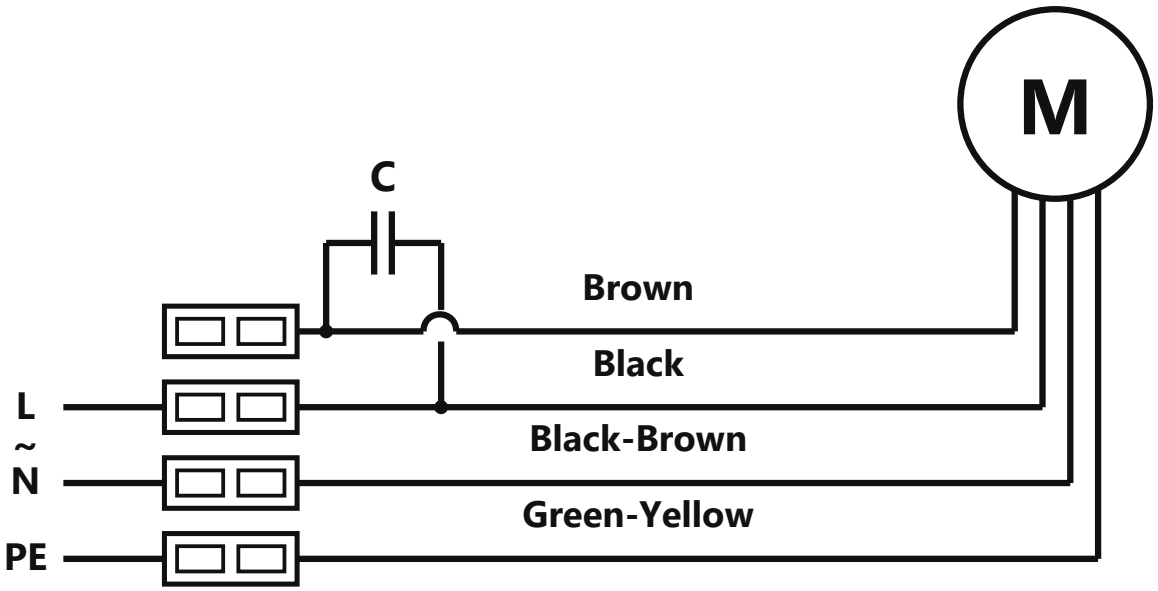

Single-phase 230 V / 50 Hz. Conductor colours follow the supplied model-specific drawings. The 150-315 neutral lead is labelled Black-Brown in the supplied diagram; this label is retained. C denotes the capacitor; use the ratings in the motor table.

VMF

Mixed flow inline duct fans

VOLTVENT®
VENTILATION SYSTEMS

info@voltvent.com | voltvent.com