VOLTVENT®
VENTILATION SYSTEMS

VAS-X SERIES

Wall mounted axial flow fans

VAS-X

DIRECT-DRIVE AXIAL IMPELLER

POWDER-COATED STEEL CASING



200-350	08	50 Hz
Fan diameter / mm	Models in the range	Single-phase AC

info@voltvent.com | voltvent.com

01 / PRODUCT OVERVIEW

Ventilation in a compact form.



01 Direct axial airflow

A single-phase AC motor directly drives the axial impeller. Four diameters have separate 2- and 4-pole options.

02 Guard and mounting

The casing and axial impeller use powder-coated sheet metal. A protective wire guard covers the motor side.

03 Supply, extract and circulation

For indoor-air extraction, fresh-air supply and machine air circulation. Keep inlet and outlet paths unobstructed.

SELECTION & PERFORMANCE

Select by diameter and motor variant.

Eight 50 Hz models combine four diameters with 2- or 4-pole single-phase motors. Pressure curves show listed performance data and remain within their supplied airflow domains. Observe the selected motor voltage, capacitor and transported-air temperature limit.

Selection parameter	Catalogue basis
Fan diameter range	200-350 mm / 4 diameters
Nominal input power	55-200 W
Electrical supply	230 V / 1 phase / 50 Hz
Motor insulation / protection	Class B / IP44

Performance data. Speed control must suit the selected motor.

02 / TECHNICAL DATA

Compare the motor variants.

8 MODELS / 50 Hz

Model	Poles	V / PH	Input W	Airflow m^3/h	Speed rpm	Current A	Weight kg	Air temp. °C
VAS-X 200-2P	2	230/1	63	680	2750	0.28	2	40
VAS-X 200-4P	4	230/1	55	407	1450	0.26	2.2	40
VAS-X 250-2P	2	230/1	100	1500	2700	0.5	2.7	40
VAS-X 250-4P	4	230/1	55	760	1400	0.28	2.7	40
VAS-X 300-2P	2	230/1	140	2020	2600	0.6	3.5	40
VAS-X 300-4P	4	230/1	65	1410	1360	0.29	3.5	40
VAS-X 350-2P	2	230/1	200	3110	2050	0.9	4.6	40
VAS-X 350-4P	4	230/1	75	2340	1330	0.32	4.6	40

Airflow: nominal maximum airflow in m^3/h; not a selected duty point. Listed curve domains may differ from nominal airflow. Nominal input power, speed and current are ratings; operating values vary with airflow.

Temperature: maximum transported-air temperature for each variant. Class B / IP44 throughout the supplied records. 2P / 4P: motor poles; all models use single-phase supply.

03 / AIR PERFORMANCE / 01

Fan Performance Curves

VAS-X 200-2P / 63 W

1 phase / 50 Hz / reference 2750 rpm

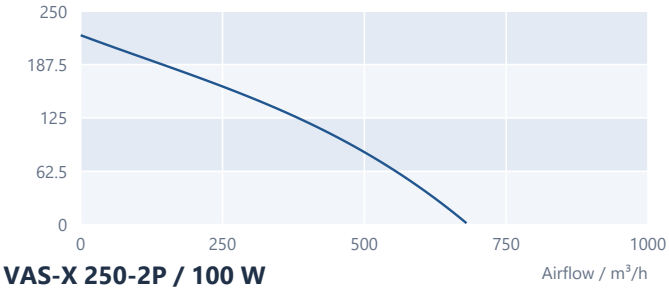

VAS-X 200-4P / 55 W

1 phase / 50 Hz / reference 1450 rpm

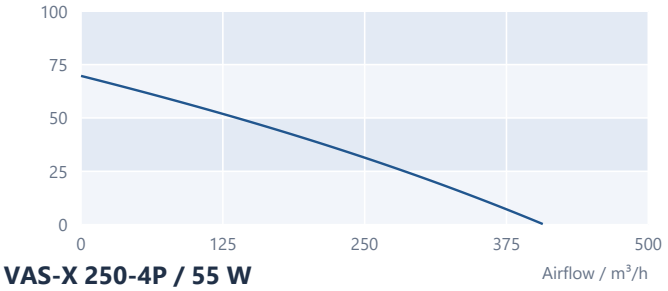

VAS-X 250-2P / 100 W

1 phase / 50 Hz / reference 2700 rpm

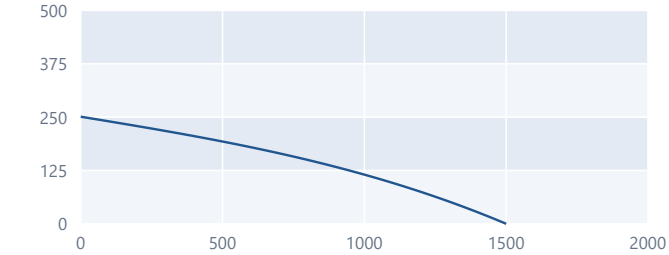

VAS-X 250-4P / 55 W

1 phase / 50 Hz / reference 1400 rpm

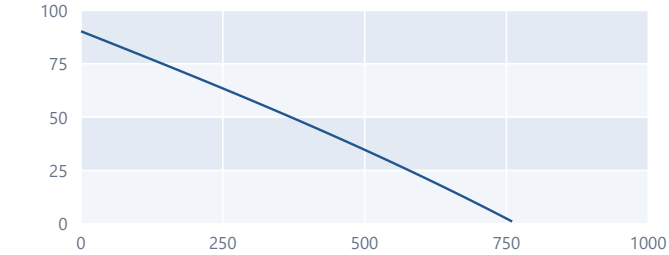

VAS-X 300-2P / 140 W

1 phase / 50 Hz / reference 2600 rpm

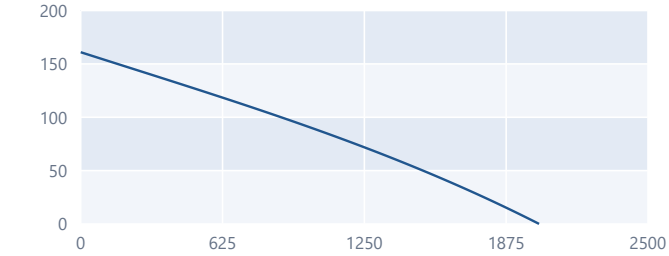

VAS-X 300-4P / 65 W

1 phase / 50 Hz / reference 1360 rpm

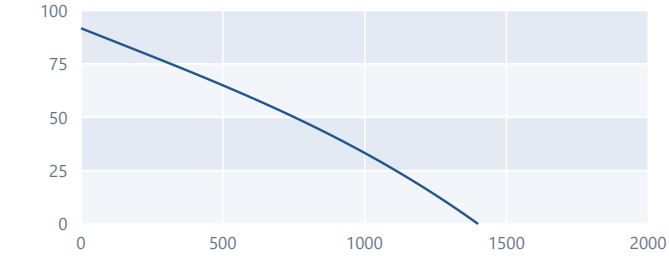

VAS-X 350-2P / 200 W

1 phase / 50 Hz / reference 2050 rpm

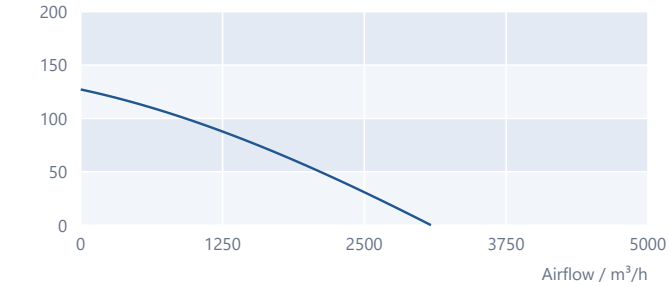

VAS-X 350-4P / 75 W

1 phase / 50 Hz / reference 1330 rpm

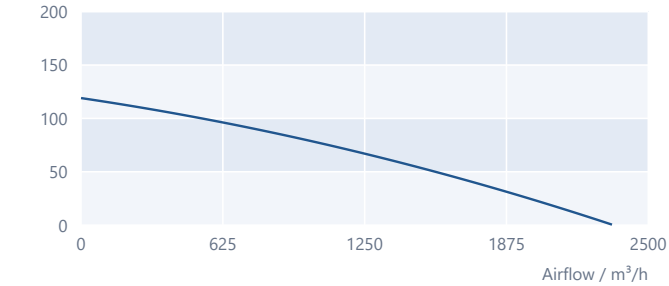

Model-specific scales. Listed 50 Hz pressure curves stay within listed airflow domains; negative-pressure tails are omitted at the zero-pressure crossing. No extrapolation.

04 / DIMENSIONAL DATA

Plan the mounting points.

SERIES DRAWING / 200-350

All dimensions in mm

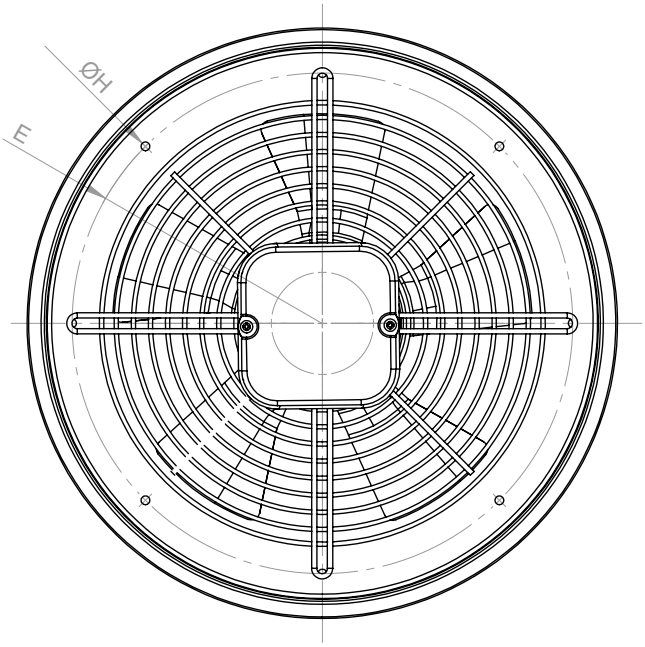

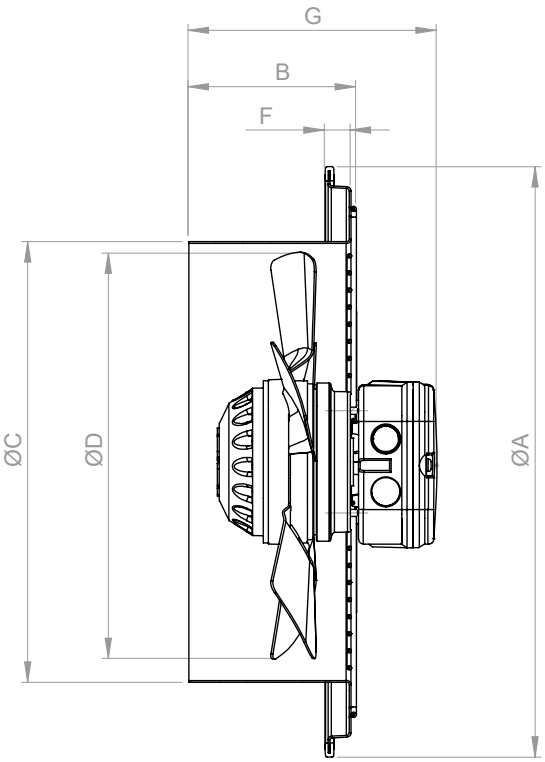

Model size	A	B	C	D	E	F	G	H
VAS-X 200	284	95	200	189	229	14	140	5
VAS-X 250	335	95	250	238	284	14	140	5
VAS-X 300	390	95	300	288	332	14	140	5
VAS-X 350	427	100	350	338	398	2	145	5

Original data drawing. Both pole options share the listed dimensions for each diameter. Secure the fan at the specified mounting points and allow clearance for the motor-side guard.

05 / ELECTRICAL & INSTALLATION

Connect the single-phase motor.

Isolate the supply before installation or maintenance. Secure the mounting points and confirm the intended airflow direction. Use the specified capacitor and a compatible voltage controller. Keep the fan casing and protective guard clear.

SINGLE PHASE / CONNECTION DIAGRAM 01

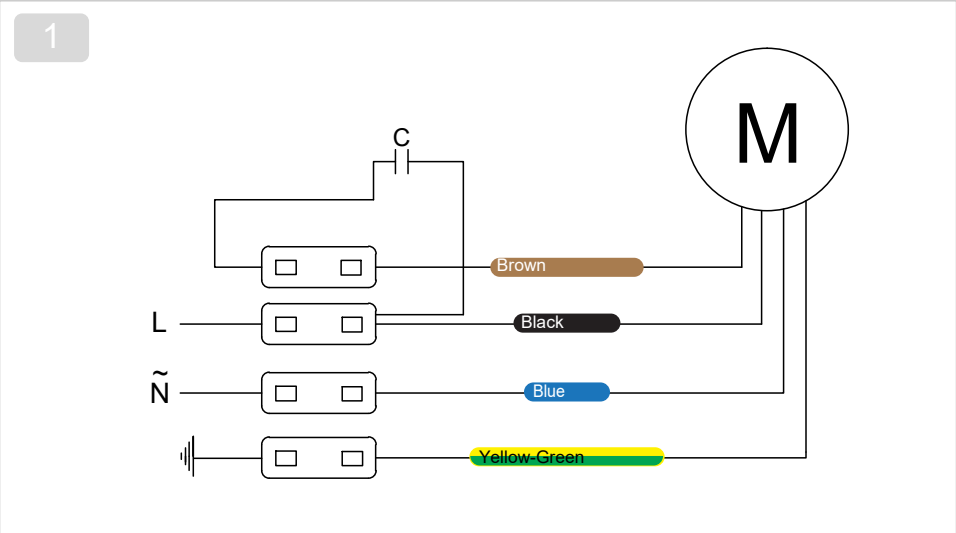

Model	Input power	Capacitor	Capacitor voltage
VAS-X 200-2P	63 W	2 µF	400 V
VAS-X 200-4P	55 W	2 µF	400 V
VAS-X 250-2P	100 W	4 µF	400 V
VAS-X 250-4P	55 W	1.5 µF	400 V
VAS-X 300-2P	140 W	5 µF	400 V
VAS-X 300-4P	65 W	2 µF	400 V
VAS-X 350-2P	200 W	5 µF	400 V
VAS-X 350-4P	75 W	3 µF	400 V

All models: 1~230 V / 50 Hz. Original data terminal arrangement; conductor colours and electrical paths are retained. Follow the actual motor nameplate and supplied unit diagram.

VAS-X

Wall mounted axial flow fans

