HR-ECO SERIES

Residential counterflow heat recovery units

HR-ECO

ec MOTOR

COUNTERFLOW HEAT EXCHANGER

EC FANS / FOUR CIRCULAR PORTS



195-570
Airflow at 100 Pa / m^3/h

05
Models in the range

EC
Variable-speed fans

01 / PRODUCT OVERVIEW

Fresh air for everyday living.

Residential counterflow heat recovery unit



SERVICE ACCESS BUILT IN

Allow space in front of the unit for filter and component access. Install the condensate drain and keep it accessible for inspection.

01 Counterflow heat recovery

A plastic counterflow plate exchanger transfers energy between separate supply and extract air streams. Thermal efficiency is stated at the declared reference conditions.

02 A compact insulated cabinet

The powder-coated steel casing contains thermal insulation. Four circular connections serve outdoor, supply, return and exhaust air paths.

03 EC fans and configuration options

EC fans provide speed control. G class filtration is used, with optional F class filtration. Bypass and filter options depend on the selected configuration.

SERIES AT A GLANCE

Selection parameter	Series reference
Fan supply	230 V / 1 phase / 50 Hz
Fan technology	EC / variable speed
Heat exchanger	Plastic counterflow plate
Filter options	G class / optional F class
Minimum front service space	400 mm small body / 600 mm large body

HR-ECO 300, 301 and 302 share the smaller cabinet. HR-ECO 500 and 700 use the larger cabinet, with different duct diameters. Use the model-specific tables for selection.

02 / TECHNICAL DATA

Compare the declared ratings.

DECLARED AIRFLOW AND INPUT POWER / 100 Pa

Model	Airflow at 100 Pa m^3/h	Input power at 100 Pa W	Unit mass kg
HR-ECO 300	220	112	24
HR-ECO 301	195	105	24
HR-ECO 302	225	112	24
HR-ECO 500	370	169	38
HR-ECO 700	570	333	38

Airflow and electrical input power are declared at maximum airflow against 100 Pa. They are not zero-pressure ratings or duty-dependent power curves. The 38 kg mass for HR-ECO 500/700 applies without the bypass module.

THERMAL REFERENCE / 50 Pa

Model	Reference airflow m^3/h	Thermal efficiency %	Reference sound power LWA / dB(A)
HR-ECO 300	154.8	85.8	57.4
HR-ECO 301	136.8	89	57.4
HR-ECO 302	158.4	87.9	57.4
HR-ECO 500	259.2	90.5	57.3
HR-ECO 700	399.6	87.2	57

Thermal efficiency is a declared reference value at the airflow shown and 50 Pa reference pressure difference. Sound power is stated at the declared reference airflow. These values are separate from fan efficiency and installation sound pressure.

03 / AIR PERFORMANCE

Fan Performance Curves

HR-ECO 300

Published maximum-speed setting

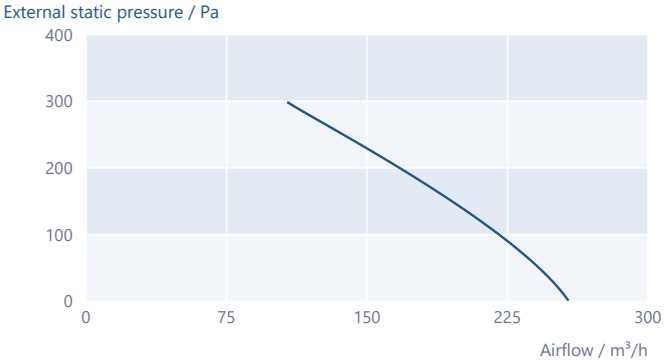

HR-ECO 301

Published maximum-speed setting

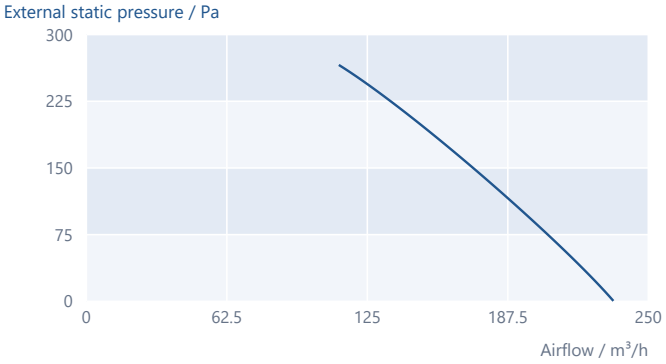

HR-ECO 302

Published maximum-speed setting

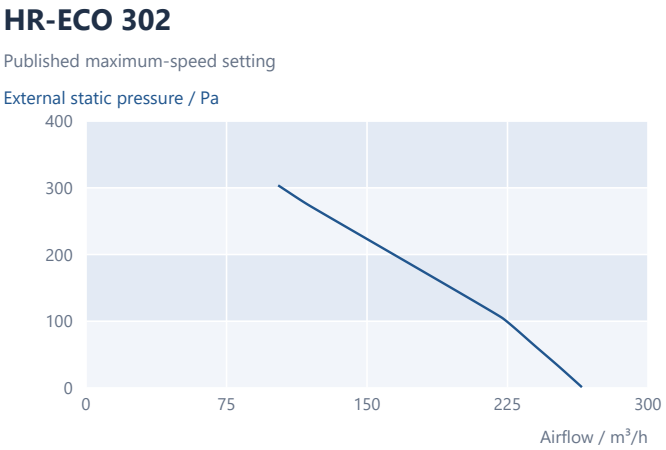

HR-ECO 500

Published maximum-speed setting

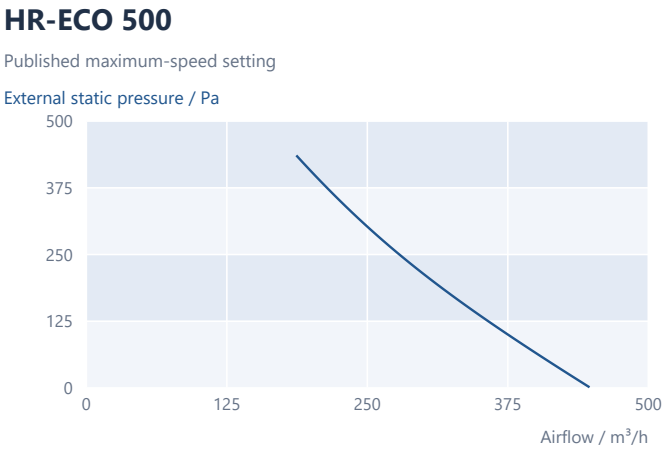

HR-ECO 700

Published maximum-speed setting

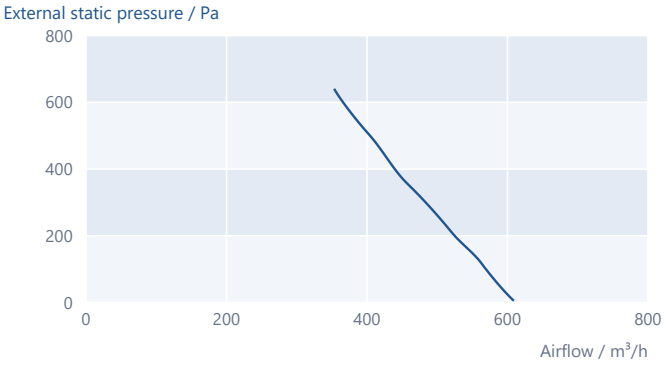

SELECT WITHIN THE PUBLISHED RANGE

Each curve retains its own published airflow window. A blank part of the plot is outside the available curve; no extension to zero flow or pressure is assumed.

The charts show maximum-speed air performance. Declared 100 Pa ratings and thermal reference values are listed separately on page 3.

Model-specific scales. Curves preserve the verified numerical data without re-fitting or extrapolation. No automatic speed adjustment or installation correction is applied.

04 / DIMENSIONS

Compact cabinet dimensions.

HR-ECO 300 / 301 / 302

All dimensions in mm

FRONT VIEW

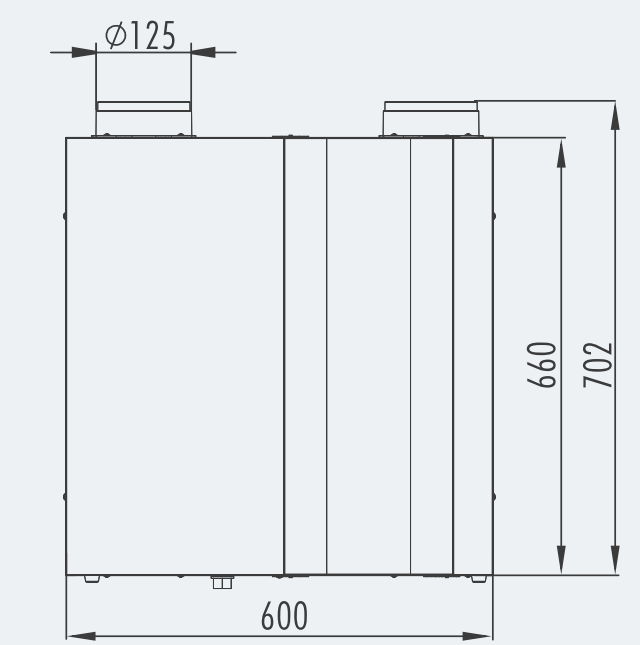

TOP VIEW

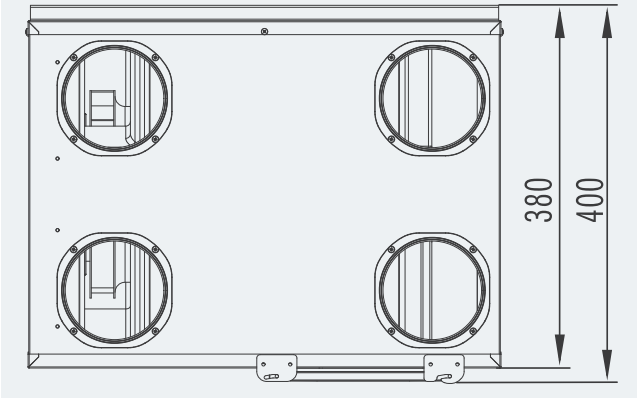

Model	Width mm	Body height mm	Overall height mm	Duct diameter mm
HR-ECO 300	600	660	702	125
HR-ECO 301	600	660	702	125
HR-ECO 302	600	660	702	125

DEPTH

380 mm body / 400 mm overall

FRONT SERVICE CLEARANCE

400 mm minimum

Original front and top geometry retained. Keep the service area clear and provide a condensate drain; do not scale the drawing.

05 / DIMENSIONS

Larger cabinet. Two duct sizes.

HR-ECO 500 / 700

All dimensions in mm

FRONT VIEW

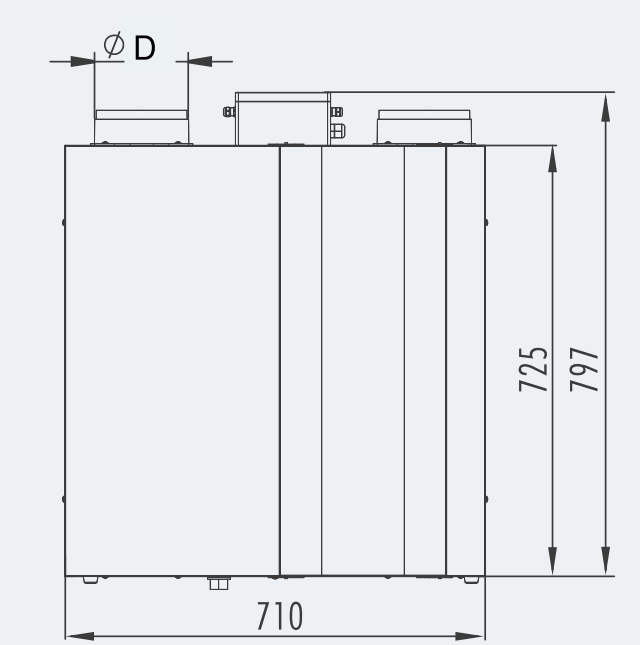

TOP VIEW

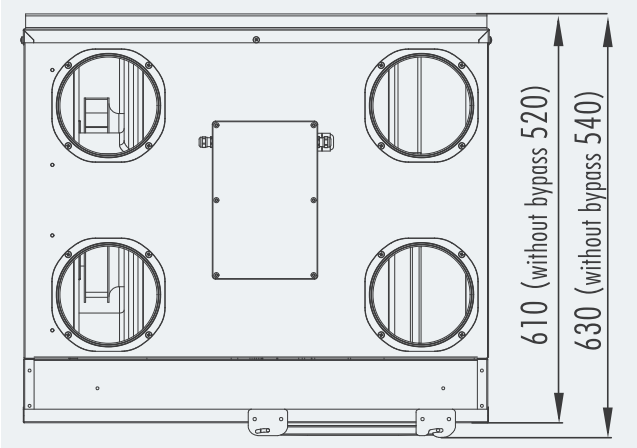

Model	Width mm	Body height mm	Overall height mm	Duct D mm
HR-ECO 500	710	725	797	160
HR-ECO 700	710	725	797	200

DEPTH OPTIONS / BOTH MODELS

Configuration	Body depth / mm	Overall depth / mm
Without bypass	520	540
With bypass	610	630

Front service clearance: 600 mm minimum. The 38 kg mass rating is for the unit without the bypass module. Provide a condensate drain.

06 / INSTALLATION & OPTIONS

Install for easy access.

01 / DUCT CONNECTIONS

Keep the four air streams distinct.

Connect outdoor, supply, return and exhaust ducts to the matching unit ports. Confirm the connection arrangement of the ordered configuration and keep the condensate drain accessible.

Model group	Minimum front service space
HR-ECO 300 / 301 / 302	400 mm
HR-ECO 500 / 700	600 mm

Allow the full service clearance in front of the unit. Plan access for filter replacement, heat-exchanger maintenance and drain inspection.

02 / ELECTRICAL & CONTROLS

Fan supply: 230 V / 1 phase / 50 Hz, with EC fans and speed control. A verified model-specific electrical connection diagram is not available in the current technical record. Use the electrical and control documentation supplied with the ordered unit.

03 / FILTERS & BYPASS

G class filters are provided, with optional F class filtration. Filter and bypass options depend on the selected configuration. Check the chosen filter arrangement, bypass option and cabinet depth before installation.

HR-ECO

ec MOTOR

Residential counterflow heat recovery units

VOLTVENT®
VENTILATION SYSTEMS

info@voltvent.com | voltvent.com