VAB SERIES

Wall mounted greenhouse fans

VAB

ALUMINIUM IMPELLER

GALVANIZED HOUSING & SHUTTERS

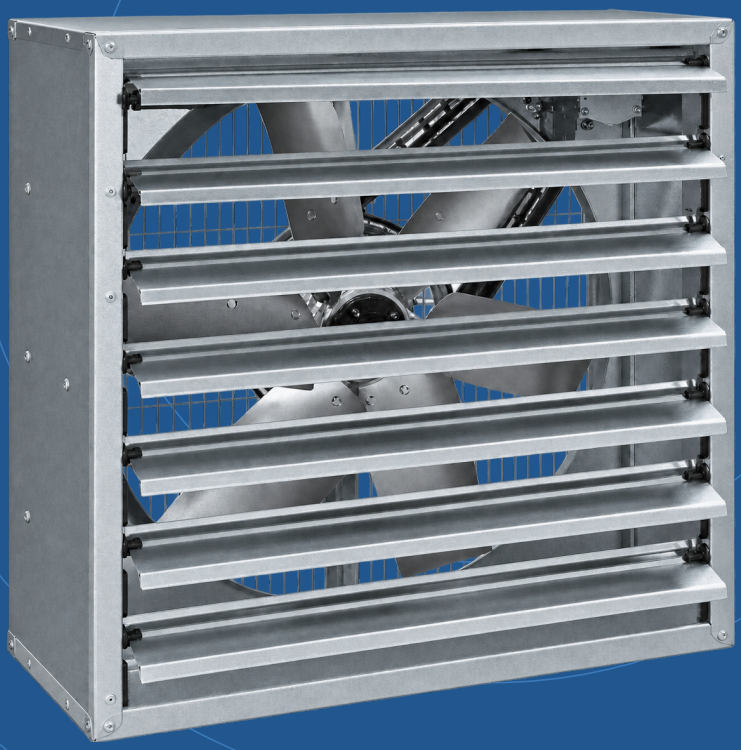

600-1400	04	50 Hz
Housing face / mm	Models in the range	Three-phase AC

01 / PRODUCT OVERVIEW

Fresh air for growing spaces.



01 Wall-mounted construction

Square galvanized sheet-metal housing with an aluminium impeller. Wall mounting preserves floor space in the greenhouse.

02 Shutters and protection

The approved product photo shows the shuttered configuration. Keep the shutters and protective grille clear for unobstructed airflow.

03 Three-phase motor

380 V / 50 Hz, Class F and IP55. The series data list TEFC enclosure, continuous S1 duty and an IE2-IE3 efficiency range.

SELECTION & PERFORMANCE

Match the fan to the greenhouse.

Four models provide catalogue airflow ratings from 7 000 to 44 500 m^3/h. Compare each model curve with the required operating point and allow adequate replacement air. Nominal motor power and reference speed are catalogue ratings; duty power and speed curves are unavailable.

Selection parameter	Catalogue basis
Housing face / depth	600-1400 mm / 400 mm
Nominal motor power	0.25-1.10 kW
Electrical supply	380 V / 3 phase / 50 Hz
Motor insulation / protection	Class F / IP55 / catalogue IE2-IE3
Working temperature / duty	-20 to +50 °C / S1

Voltvent VAB series data are listed in FSP. Product photograph illustrates the listed model.

02 / TECHNICAL DATA

Compare the four models.

4 MODELS / 50 Hz / THREE PHASE

Model	Motor kW	Catalogue airflow m^3/h	Reference speed rpm	Supply V / phase	Catalogue sound* dB(A)
VAB 60	0.25	7 000	1400	380 / 3	50
VAB 80	0.37	9 500	1400	380 / 3	55
VAB 100	0.37	22 500	1400	380 / 3	63
VAB 140	1.10	44 500	1400	380 / 3	65

All models: 50 Hz, Class F, IP55, TEFC and continuous S1 duty; operating range -20 to +50 °C. The catalogue gives IE2-IE3 as a range; confirm the actual supplied motor efficiency class. Airflow values are catalogue endpoints, not selected duty points.

SOUND DATA

*Sound levels are retained as catalogue values only. Sound power/pressure classification, measurement distance and octave-band spectra are unspecified; do not compare these values as a classified acoustic rating.

MODEL & DIMENSION BASIS

VAB 60, 80, 100 and 140 identify the catalogue housing size codes. Full A/B/C cabinet dimensions are on page 5. Mapped AF impeller diameters in FSP are not used as verified product dimensions here.

Motor current, unit weight and duty power/speed curves were not supplied.

03 / AIR PERFORMANCE / 01

Fan Performance Curves

VAB 60

0.25 kW / 380 V / reference 1400 rpm

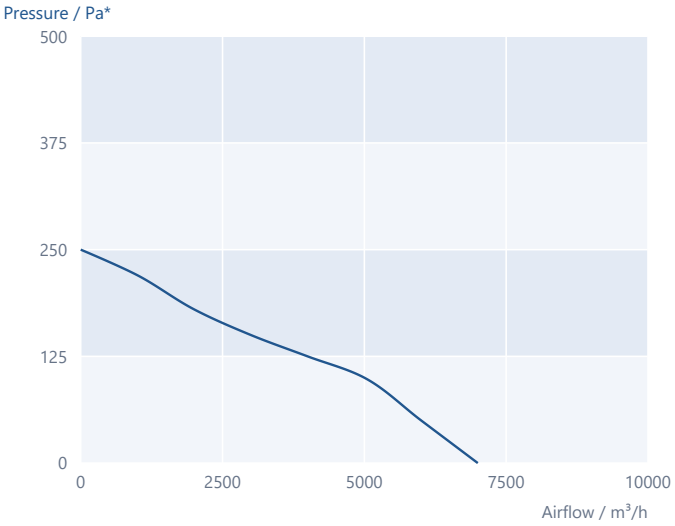

VAB 80

0.37 kW / 380 V / reference 1400 rpm

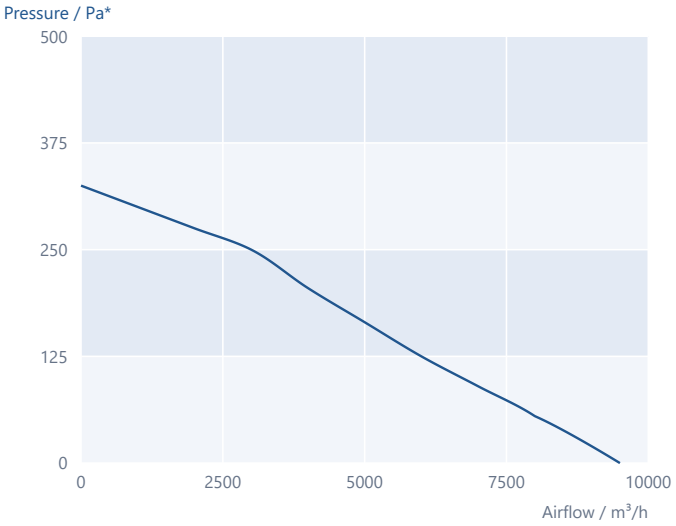

VAB 100

0.37 kW / 380 V / reference 1400 rpm

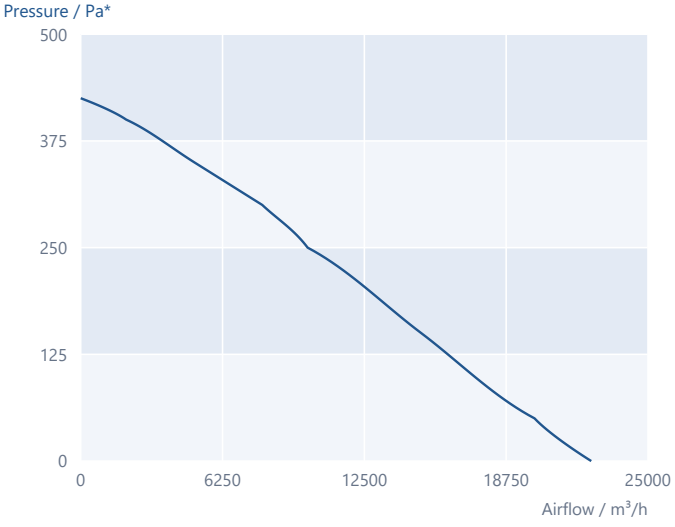

VAB 140

1.10 kW / 380 V / reference 1400 rpm

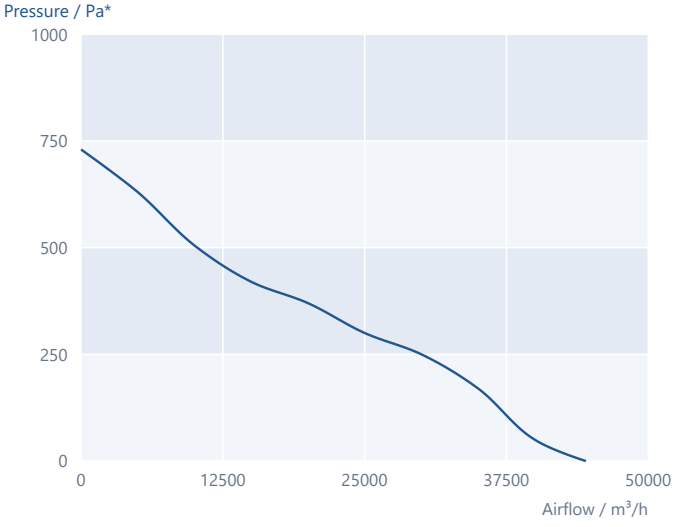

*Pressure unit is not printed in the data; interpreted as Pa. Static/total pressure type is unspecified. Curves reproduce the listed vector paths using calibrated airflow ticks; no extrapolation.

04 / DIMENSIONAL DATA

Plan the wall opening.

SERIES DRAWING / VAB 60-140

All dimensions in mm

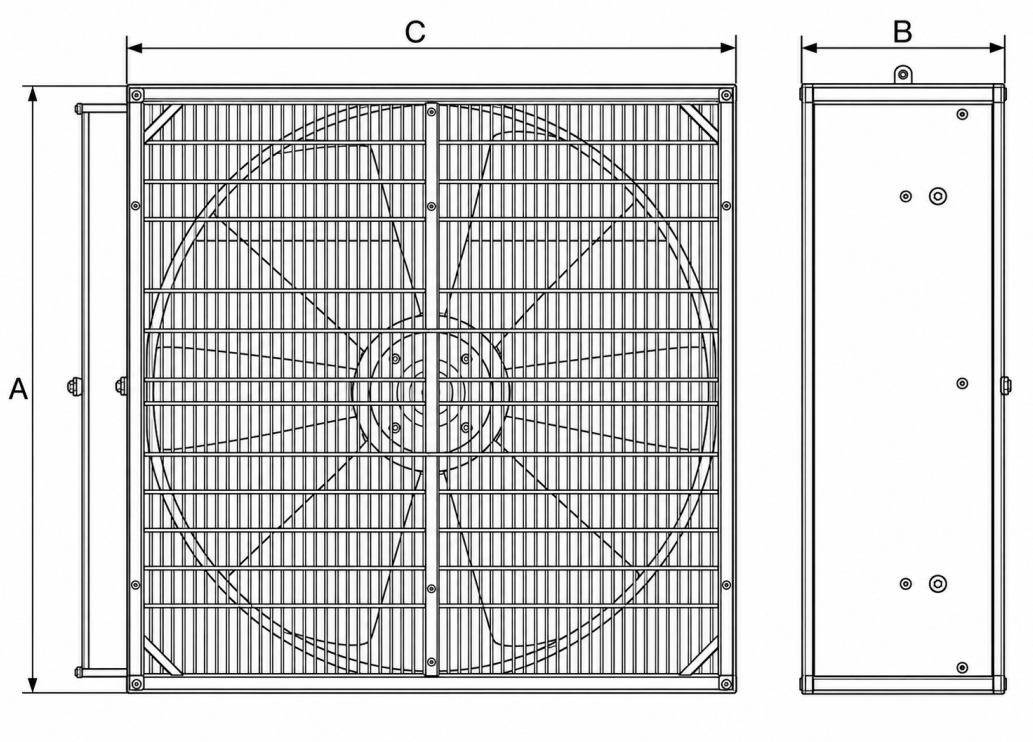

Model	A	B	C
VAB 60	600	400	600
VAB 80	800	400	800
VAB 100	1000	400	1000
VAB 140	1400	400	1400

A: housing height. B: housing depth. C: housing width. Product raster drawing; original vector drawing unavailable. Dimension values are listed by model. Confirm installation clearances and the supplied unit before preparing the wall opening.

05 / INSTALLATION & MOTOR

Prepare the installation.

01 Mounting and airflow

Mount securely in a suitable wall opening and provide adequate replacement air. Leave clear inlet and discharge paths and clearance for the shutters to move.

02 Motor configuration

Three-phase 380 V / 50 Hz, Class F, IP55, TEFC and continuous S1 duty. Catalogue reference speed is 1400 rpm; the IE2-IE3 range does not specify an individual motor class.

03 Electrical connection

A verified model-specific electrical diagram was not supplied. Follow the actual motor nameplate and the connection documentation supplied with the unit.

04 Access and maintenance

Isolate electrical power before maintenance. Clean the impeller, grille and shutters, check free shutter movement, and inspect mounting fasteners and connections.

OPERATING & PERFORMANCE BASIS

Operating range: -20 to +50 °C. Catalogue curves do not specify static or total pressure. Duty power, current, speed, efficiency and acoustic spectra are not supplied.

VAB

Wall mounted greenhouse fans

