VOLTVENT®
VENTILATION SYSTEMS

VENTILATION ACCESSORIES

Silencers

VAXS / VCIS / VRIS

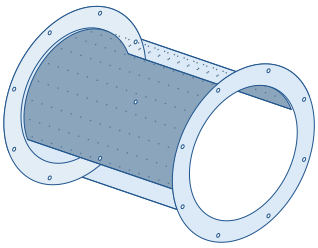

VAXS

Axial fan silencer

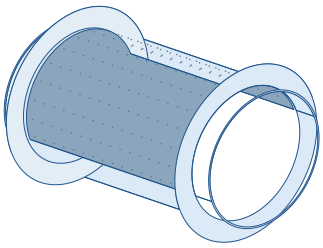

VCIS

Circular inline

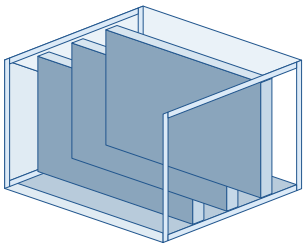

VRIS

Rectangular inline

Acoustic control for ventilation.

Technical catalogue

Size schedules & installation interfaces

01 / PRODUCT INDEX

Three series. One acoustic brief.

Select the connection format, then coordinate acoustic duty, pressure loss and installation space.

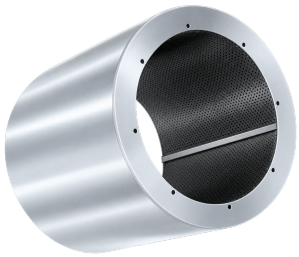

VAXS

04 / 05

Axial fan silencer

10 circular connection sizes. Length selected for the project.



VCIS

06 / 07

Circular inline silencer

18 circular connection sizes. Listed lengths: 500 / 1000 mm.



VRIS

08 / 09

Rectangular inline silencer

70 rectangular size combinations. Listed length: 500 mm.

This catalogue lists nominal connection sizes and available length information. Acoustic performance, outside envelopes, masses, support loads and operating classifications require the selected product documentation.

02 / SELECTION OVERVIEW

Match the route and the duty.

Connection size, silencer length and acoustic performance are separate selection inputs.

Series	Connection schedule	Length information
VAXS	Ø400 to Ø1250 / 10 listed sizes	Project selection
VCIS	Ø100 to Ø1250 / 18 listed sizes	500 mm through Ø355; 1000 mm above
VRIS	W200 to W800 × H200 to H1120 / 70 combinations	500 mm listed

Application views illustrate connection principles, not exclusive model compatibility.

1 Define the acoustic brief

Identify the fan sound spectrum, required downstream sound level and the relevant operating point.

2 Allow for air-side resistance

Select insertion loss, pressure loss and flow-generated sound together for the offered silencer.

COORDINATE THE ACTUAL ASSEMBLY

Confirm connection geometry, available length, maintenance access, support and the operating environment. A silencer connected to a smoke extract or Ex-proof fan does not automatically inherit that fan classification.

VAXS / SIZE SCHEDULE

VAXS

Axial fan silencer

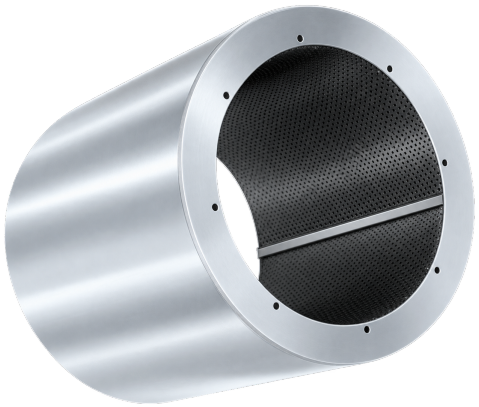

Flanged circular silencer for axial fan and duct arrangements. The installation view is illustrative; suitable models depend on the selected connection and duty.

10 listed sizes

Code	Nominal connection Ø / mm
VAXS	400
VAXS	450
VAXS	500
VAXS	560
VAXS	630
VAXS	710
VAXS	800
VAXS	900
VAXS	1000
VAXS	1250

Nominal connection Ø is listed. Final length, attenuation, pressure loss and support design are selected for the actual duty.

VAXS / INSTALLATION INTERFACE

Flanged installation example

Illustrative arrangement only. Other compatible fan models may be used after connection and duty checks.

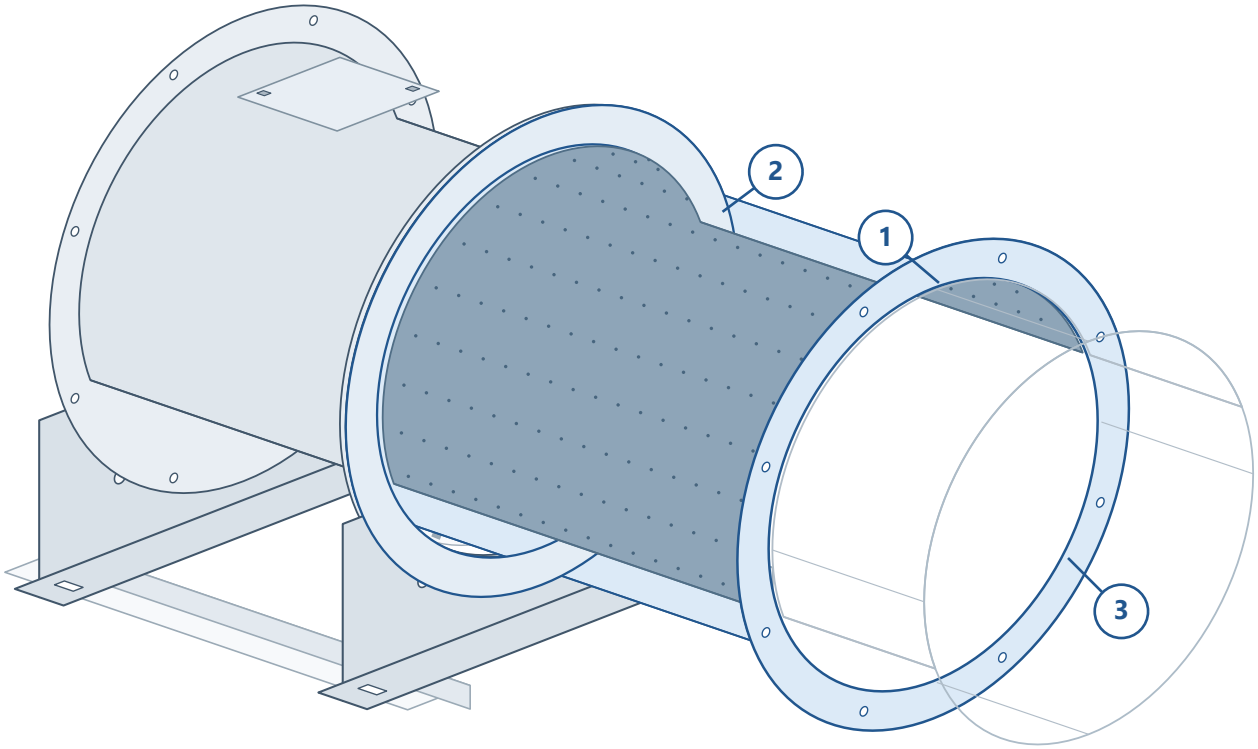

01 / Silencer body

Shown in a flanged circular assembly. Select the silencer length and acoustic duty for the chosen fan.

02 / Mating interface

Match the nominal Ø and confirm the actual flange pattern, sealing and joint.

03 / Acoustic air passage

The perforated inner surface is shown schematically. Confirm lining details and clear bore.



SUPPORT & SERVICE

The pictured fan is an application example, not an exclusive model match. Confirm the selected fan/silencer interface, duty, support and service access.

Not to scale. No dimensional, acoustic or operating classification is inferred from the illustration.

VCIS / SIZE SCHEDULE

VCIS

Circular inline silencer



A circular duct silencer for the ventilation route. Coordinate the nominal connection diameter, listed length and available installation space.

18 listed sizes

Nominal Ø / mm	L / mm
100	500
125	500
150	500
200	500
250	500
315	500
355	500
400	1000
450	1000

Nominal Ø / mm	L / mm
500	1000
560	1000
630	1000
710	1000
800	1000
900	1000
1000	1000
1120	1000
1250	1000

The listed length is 500 mm through Ø355 and 1000 mm for larger listed diameters. Outside casing diameter and joint details require the selected drawing.

VCIS / INSTALLATION INTERFACE

Circular installation example

Illustrative arrangement only. Other compatible fan models may be used after connection and duty checks.

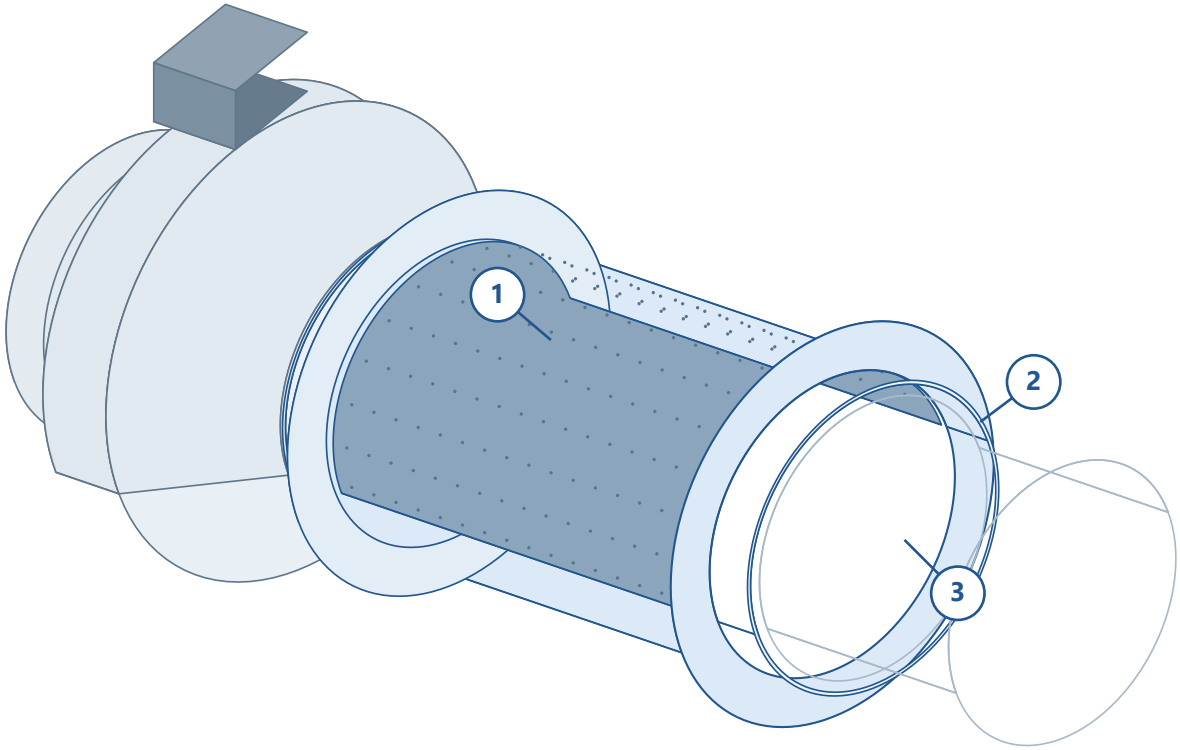

01 / Silencer body

Shown in a circular duct assembly. Coordinate the listed length, joint and service space.

02 / Mating interface

Confirm spigot/joint geometry, outside casing envelope and the specified seal.

03 / Acoustic air passage

Confirm lining construction and the selected acoustic data; perforation spacing is illustrative.



SUPPORT & SERVICE

The pictured fan is an application example, not an exclusive model match. Confirm the selected fan/silencer interface, duty, support and service access.

Not to scale. No dimensional, acoustic or operating classification is inferred from the illustration.

VRIS / SIZE SCHEDULE

VRIS

Rectangular inline silencer



A rectangular duct silencer with an illustrated splitter arrangement. Select nominal width and height together with the required acoustic duty.

70 listed sizes

H / W	200	300	400	500	600	700	800
200	•	•	•	•	•	•	•
300	•	•	•	•	•	•	•
400	•	•	•	•	•	•	•
500	•	•	•	•	•	•	•
600	•	•	•	•	•	•	•
700	•	•	•	•	•	•	•
800	•	•	•	•	•	•	•
900	•	•	•	•	•	•	•
1000	•	•	•	•	•	•	•
1120	•	•	•	•	•	•	•

All dimensions in mm. • = listed nominal W × H combination. Listed L = 500 mm.

The listed length is 500 mm. Splitter thickness, quantity, spacing, clear air area and pressure loss require the offered product selection.

VRIS / INSTALLATION INTERFACE

Rectangular installation example

Illustrative arrangement only. Other compatible fan models may be used after connection and duty checks.

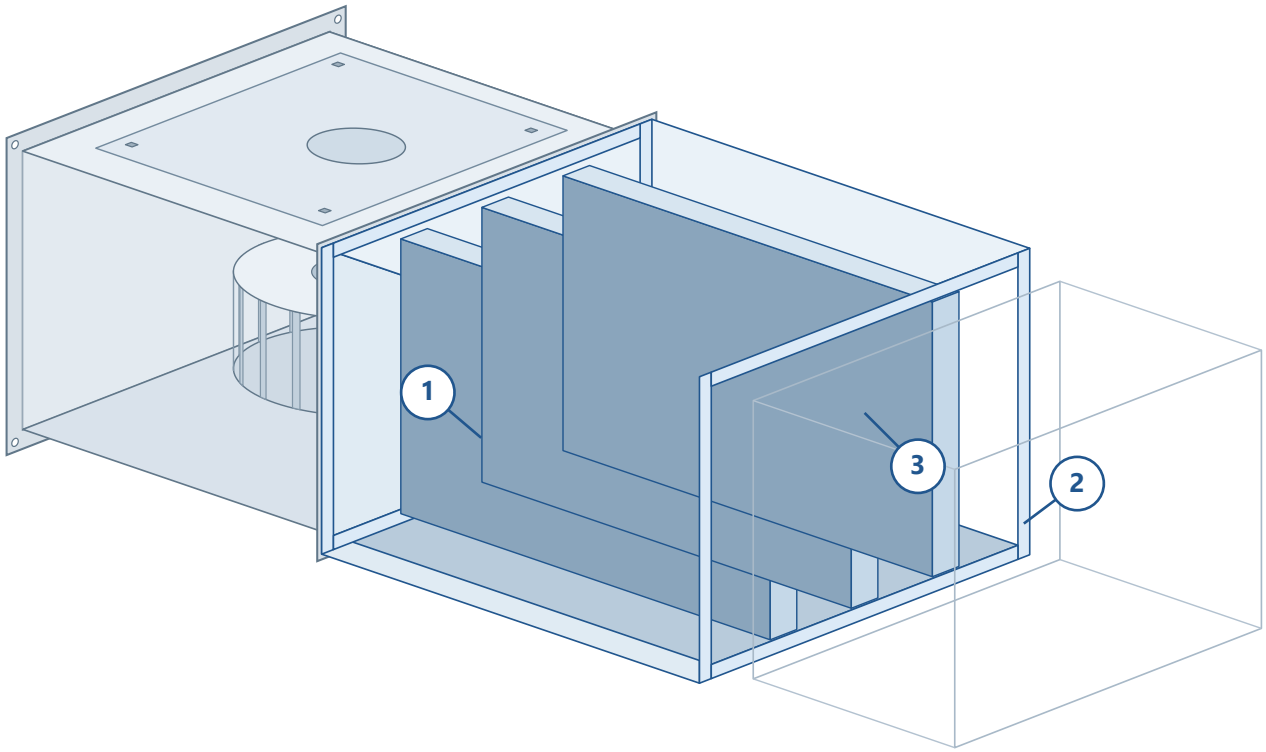

01 / Silencer body

Shown in a rectangular duct assembly. Coordinate nominal W x H and the listed 500 mm length.

02 / Mating interface

Match the actual frame/flange dimensions and connection detail without distorting the casing.

03 / Acoustic air passage

The splitter layout is illustrative. Select quantity, spacing and clear passage for the duty.

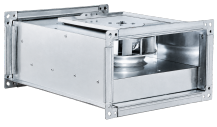

SUPPORT & SERVICE

The pictured fan is an application example, not an exclusive model match. Confirm the selected fan/silencer interface, duty, support and service access.

Not to scale. No dimensional, acoustic or operating classification is inferred from the illustration.

03 / ACOUSTIC SELECTION

Select by spectrum and airflow.

Use the offered product data for the actual duty; nominal size and length do not establish acoustic performance.

01

Sound before

Fan/system sound spectrum at the required operating point.

→

02

Silencer selection

Insertion loss, pressure loss and flow-generated sound.

→

03

Sound after

Resulting sound spectrum checked against the project target.

Selection input	Include in the acoustic assessment
Sound spectrum	Frequency-band sound power before the silencer and the downstream target.
Insertion loss	Selected product data by frequency band, matching the offered construction and length.
Pressure loss	Selected duty airflow and silencer resistance, including the installation arrangement.
Flow-generated sound	Account for sound generated by airflow through the selected silencer.

No numerical insertion loss, pressure-drop curve or sound rating is assigned in this issue. Obtain the selected product acoustic data before confirming the duty.

04 / PROJECT SCHEDULE

Release the complete selection.

Combine the nominal schedule with the actual acoustic and installation documentation.

Series	Dimension record	Still required for release
VAXS	Listed nominal Ø	Selected L; envelope; flange/fixing drawing; acoustic and pressure data.
VCIS	Listed nominal Ø and L	Outside casing size; joint detail; acoustic and pressure data.
VRIS	Listed nominal W × H and L	Frame envelope; splitter arrangement; clear air area; acoustic and pressure data.

FOR EVERY OFFERED SILENCER

Record the exact unit, size, length, airflow, acoustic target and pressure allowance. Include material/lining specification, operating environment, mass, support, access and maintenance documentation for the offered construction.

Illustrations show installation examples, not a restricted list of compatible fan models. Confirm the selected connection, acoustic duty and operating requirements for each assembly.

English catalogue review issue. Document approval and engineering validation of acoustic performance and installation are separate.

VOLTVENT®
VENTILATION SYSTEMS

VENTILATION ACCESSORIES

Silencers

VAXS / VCIS / VRIS

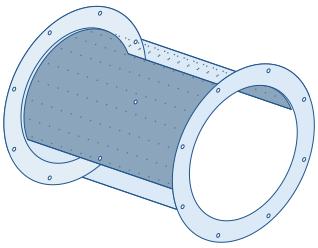

VAXS

Axial fan silencer

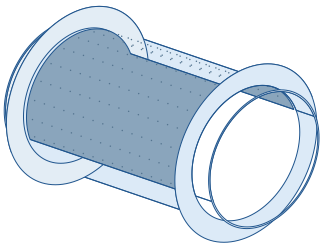

VCIS

Circular inline

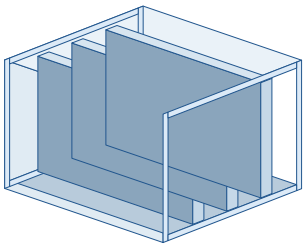

VRIS

Rectangular inline

Acoustic control for ventilation.

Voltvent Ventilation Systems

www.voltvent.com

TECHNICAL CATALOGUE / EN