Fan connections & mounting equipment

CONNECT. SUPPORT. INTEGRATE.

One view. Eight accessory types.

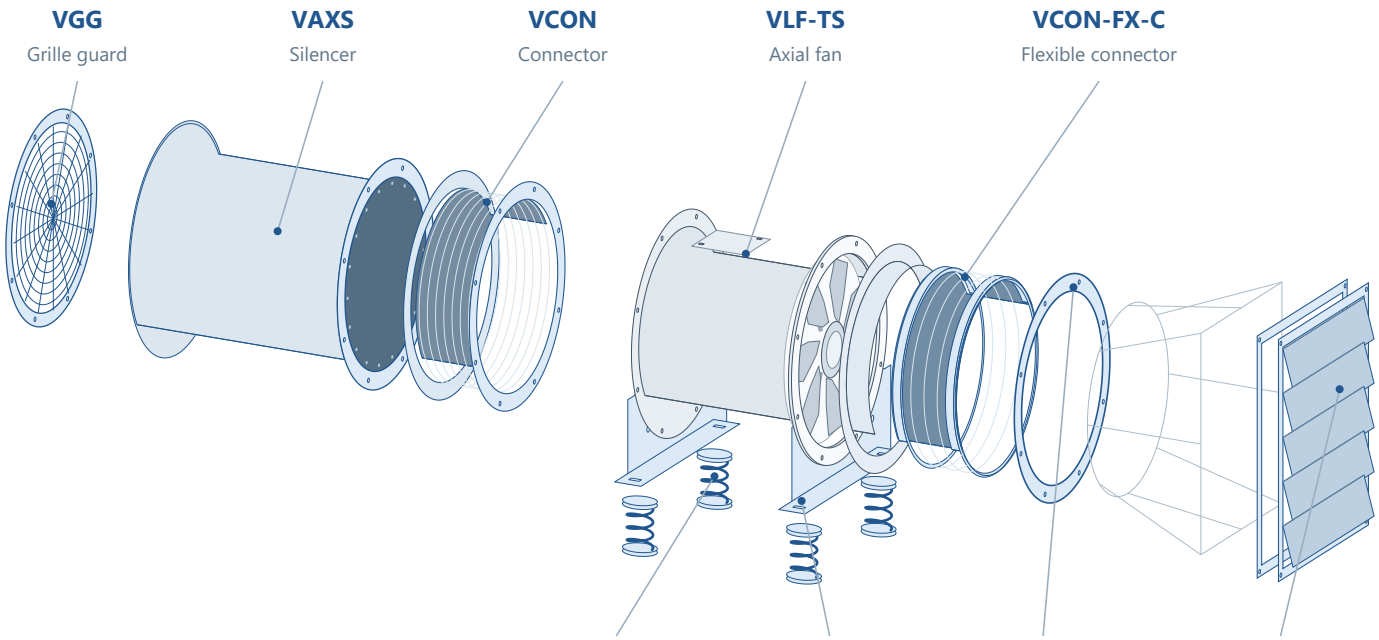

Project-specific transition interface

Exploded application view / not to scale

01 / PRODUCT INDEX

Nine accessories. One catalogue.

Technical schedules and installation views for mounting, connections, silencing and backdraft control.



VMAV
Mounting Feet
04 / DATA
05 / APPLICATION



VVIS
Vibration Isolator
06 / DATA
07 / APPLICATION



VCOF
Counter Flange
08 / DATA
09 / APPLICATION



VGG
Inlet/Outlet Grille Guard
10 / DATA
11 / APPLICATION



VCON
Connector
12 / DATA
13 / APPLICATION



VCON-FX-C
Circular Flexible Connector
14 / DATA
15 / APPLICATION



VCON-FX-R
Rectangular Flexible Connector
16 / DATA
17 / APPLICATION

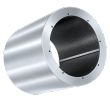

VAXS
Silencer
18 / DATA
19 / APPLICATION



VBDD-MCH-R
Rectangular Back Draft Damper
20 / DATA
21 / APPLICATION

Nominal size guidance
03

Assembly coordination
22

Project release
23

02 / READING THE SCHEDULES

Define the size. Confirm the interface.

Application views illustrate connection principles, not exclusive model compatibility. Nominal schedules list sizes and selection entries by accessory.

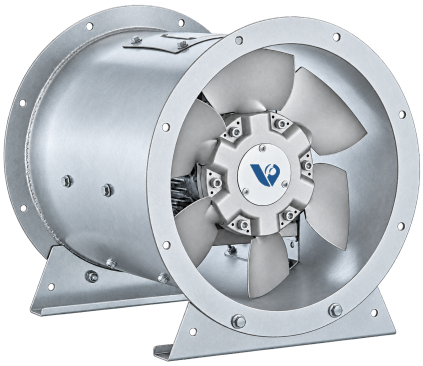

Axial fan installation examples

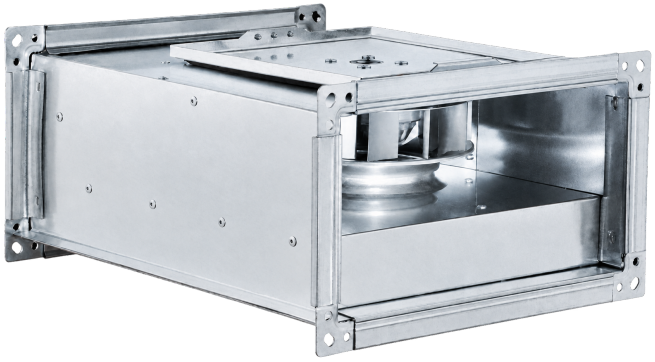

Rectangular connection example

1 Associated fan size

VMAV and VVIS are listed against the fan nominal size. This is not a foot or spring manufacturing dimension.

2 Connection size

Other tables list nominal circular Ø or rectangular W/H. Overall flange and fixing dimensions require a drawing.

A complete assembly needs its own drawing.

Confirm the mating pattern, joint length, support details, service access and operating conditions. Application views identify component positions and interfaces; they are not scaled manufacturing drawings.

VMAV / TECHNICAL DATA

VMAV

Mounting Feet



Mounting feet for supporting the selected axial fan assembly.

Coordinate the mounting position with the fan casing, support structure and access requirements.

Code	Associated fan nominal size / mm
VMAV	400
VMAV	450
VMAV	500
VMAV	560
VMAV	630
VMAV	710
VMAV	800
VMAV	900
VMAV	1,000
VMAV	1,250

The listed sizes identify the associated fan nominal size. Foot width, height, plate thickness and fixing-hole details require the selected assembly drawing.

VMAV / INSTALLATION EXAMPLE

Support the fan at its flange stations.

Illustrative arrangement only. Other compatible fan models may be used after connection and duty checks.

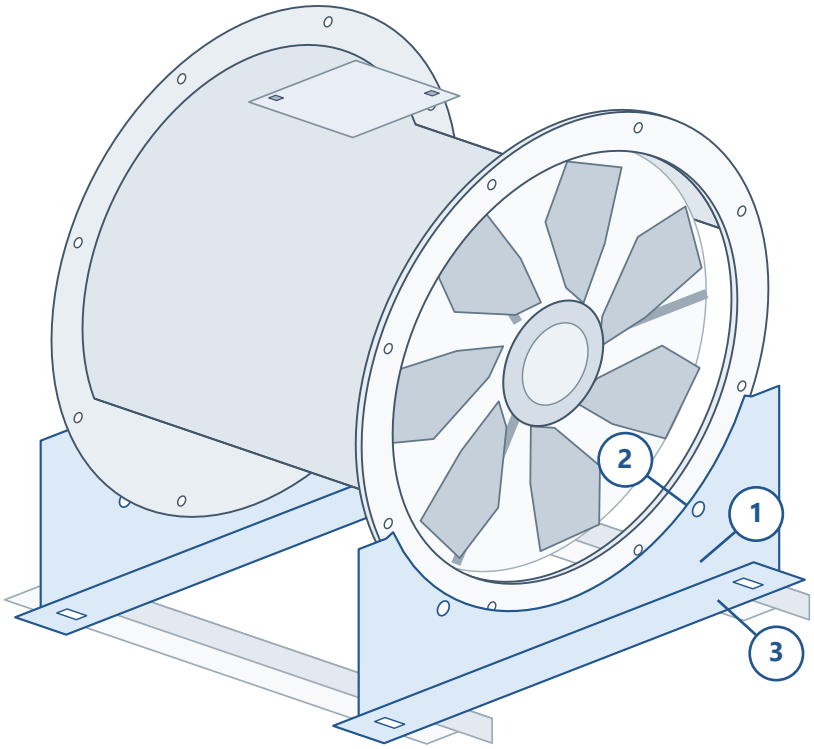

01 / Mounting foot

The concave foot is shown seated at the casing end-flange station.

02 / Fan interface

Match the fixing points to the selected fan casing/flange.

03 / Support interface

Coordinate the support surface and fixing design for the installed fan.

Illustrative arrangement, not to scale. Final interface pattern, fixing details, dimensions and installation requirements follow the selected fan/accessory drawing.

VVIS / TECHNICAL DATA

VVIS

Vibration Isolator



Vibration isolators for the fan and its supporting structure.

Used at the support points to help limit the transmission of vibration to the building structure.

Code	Associated fan nominal size / mm
VVIS	400
VVIS	450
VVIS	500
VVIS	560
VVIS	630
VVIS	710
VVIS	800
VVIS	900
VVIS	1,000
VVIS	1,250

The listed sizes identify the associated fan nominal size. Spring load, deflection, quantity and fixing arrangement are selected for the complete assembly.

VVIS / INSTALLATION EXAMPLE

Show the complete support load path.

Illustrative arrangement only. Other compatible fan models may be used after connection and duty checks.

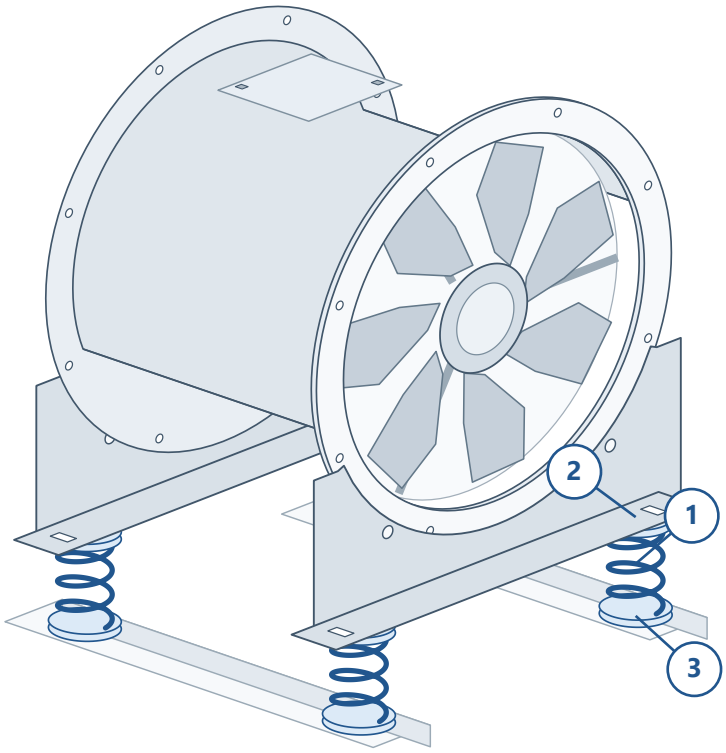

01 / Spring isolator

The spring is shown between a mounting foot and the support rail.

02 / Load path

Connect the fan and foot to the selected isolator top plate.

03 / Structure

Coordinate the lower fixing and the load carried by each support point.

Illustrated support layout. Select the isolator quantity, load and deflection for the actual fan assembly; the view does not specify a universal four-spring kit.

VCOF / TECHNICAL DATA

VCOF

Counter Flange



A counter flange for the mating connection of an axial fan installation.

Provides the matching connection interface between the fan flange and the adjoining installation.

Code	Nominal connection Ø / mm
VCOF	400
VCOF	450
VCOF	500
VCOF	560
VCOF	630
VCOF	710
VCOF	800
VCOF	900
VCOF	1,000
VCOF	1,250

The nominal connection size does not define flange outside diameter, thickness, bolt circle or hole pattern. Confirm the mating flange drawing.

VCOF / INSTALLATION EXAMPLE

Match the mating flange.

Illustrative arrangement only. Other compatible fan models may be used after connection and duty checks.

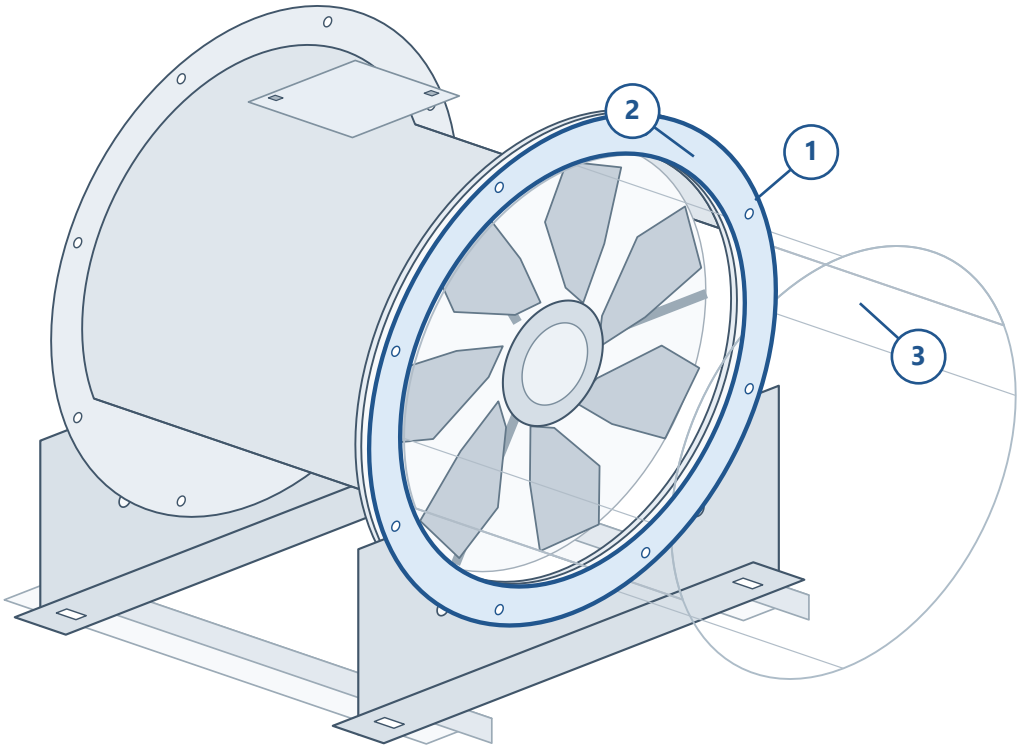

01 / Counter flange

The highlighted ring forms the mating flange at the fan connection.

02 / Fan flange

Verify the bolt pattern, sealing arrangement and fixing detail.

03 / Adjoining duct

Coordinate the duct flange and independent support for the installation.

Illustrative arrangement, not to scale. Final interface pattern, fixing details, dimensions and installation requirements follow the selected fan/accessory drawing.

VGG / TECHNICAL DATA

VGG

Inlet/Outlet Grille Guard

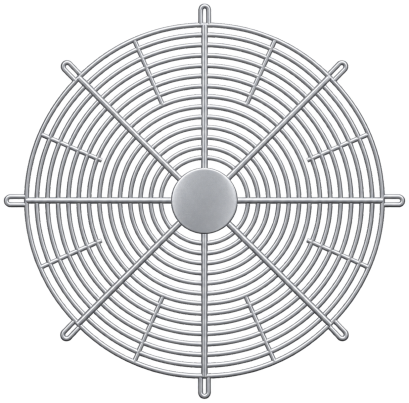

An inlet or outlet guard for the selected axial fan arrangement.

A grille guard at an exposed fan opening helps restrict access to the rotating assembly.

Code	Nominal connection Ø / mm
VGG	400
VGG	450
VGG	500
VGG	560
VGG	630
VGG	710
VGG	800
VGG	900
VGG	1,000
VGG	1,250

Verify the guard-to-flange interface, required guarding clearances and access for maintenance. Aperture and wire details are not specified by the nominal size list.

VGG / INSTALLATION EXAMPLE

Guard the exposed fan opening.

Illustrative arrangement only. Other compatible fan models may be used after connection and duty checks.

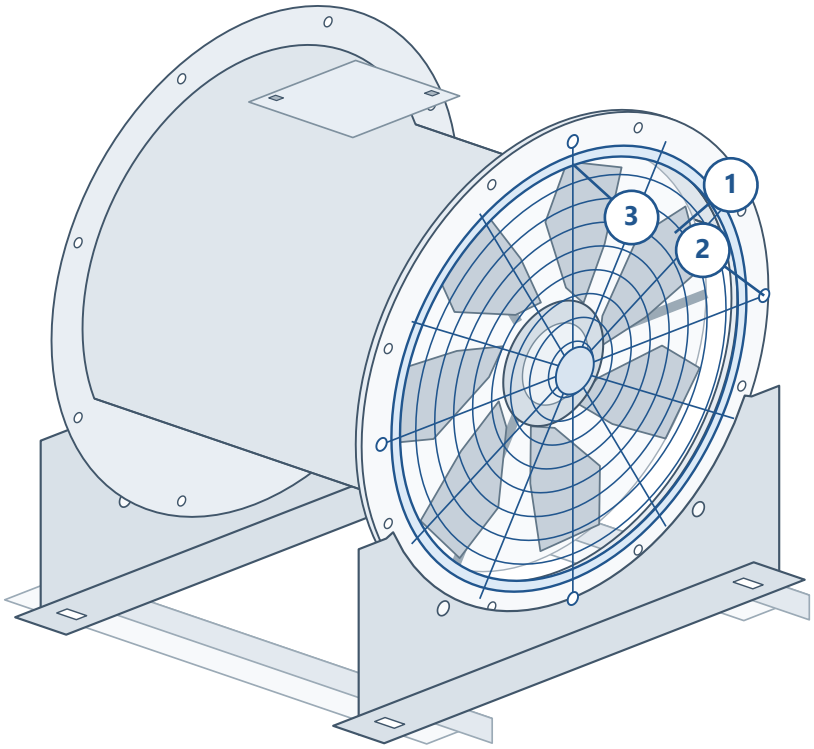

01 / Grille guard

The guard is shown across an exposed fan opening.

02 / Fixing interface

Match the perimeter attachment to the selected fan flange.

03 / Guarding space

Confirm separation, access and the required guarding arrangement.

Illustrative arrangement, not to scale. Final interface pattern, fixing details, dimensions and installation requirements follow the selected fan/accessory drawing.

VCON / TECHNICAL DATA

VCON

Connector

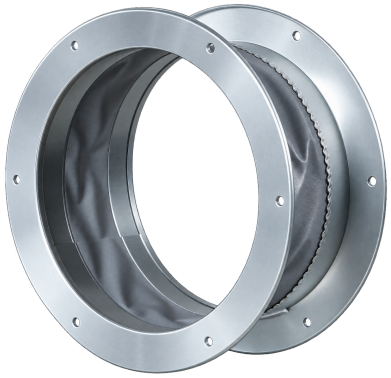

A circular connector for the selected fan connection.

Connects the fan assembly to the adjoining circular installation.

Code	Nominal connection Ø / mm
VCON	400
VCON	450
VCON	500
VCON	560
VCON	630
VCON	710
VCON	800
VCON	900
VCON	1,000
VCON	1,250

The approved product image shows a flanged connection arrangement. Confirm the actual joint construction, length, flange pattern and operating duty.

VCON / INSTALLATION EXAMPLE

Connect the fan and duct interfaces.

Illustrative arrangement only. Other compatible fan models may be used after connection and duty checks.

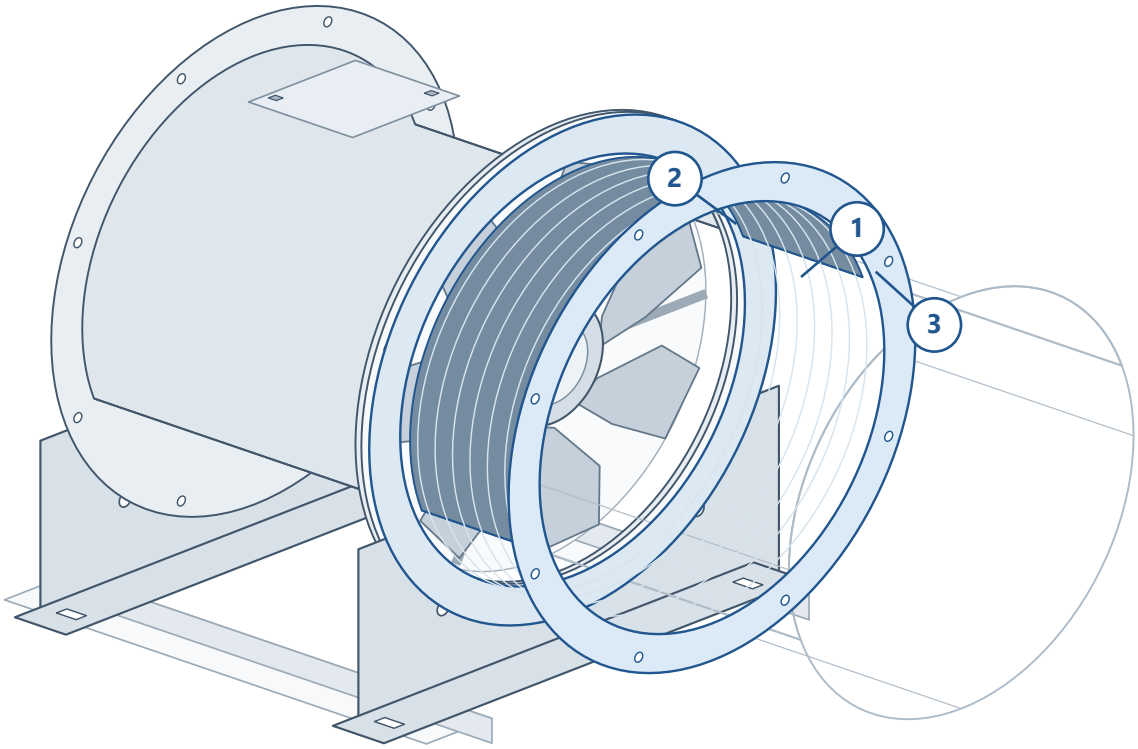

01 / Connector

The flanged connector is shown between the fan and adjoining duct.

02 / Fan-side flange

Confirm size, flange pattern, sealing and fastening.

03 / Duct-side flange

Coordinate the second interface, joint length and duct support.

Illustrative arrangement, not to scale. Final interface pattern, fixing details, dimensions and installation requirements follow the selected fan/accessory drawing.

VCON-FX-C / TECHNICAL DATA

VCON-FX-C

Circular Flexible Connector



A flexible connection for a circular duct interface.

Forms a flexible joint between the fan or ventilation unit and the adjoining circular duct.

Code	Connection Ø / mm
VCON-FX-C	100
VCON-FX-C	125
VCON-FX-C	150
VCON-FX-C	200
VCON-FX-C	250
VCON-FX-C	315
VCON-FX-C	355
VCON-FX-C	400
VCON-FX-C	450

Code	Connection Ø / mm
VCON-FX-C	500
VCON-FX-C	560
VCON-FX-C	630
VCON-FX-C	710
VCON-FX-C	800
VCON-FX-C	900
VCON-FX-C	1,000
VCON-FX-C	1,120
VCON-FX-C	1,250

Match the nominal diameter, then confirm joint length, fixing method and service conditions. The illustrated assembly includes a project-specific mating interface.

VCON-FX-C / INSTALLATION EXAMPLE

Adapt the circular connection.

Illustrative arrangement only. Other compatible fan models may be used after connection and duty checks.

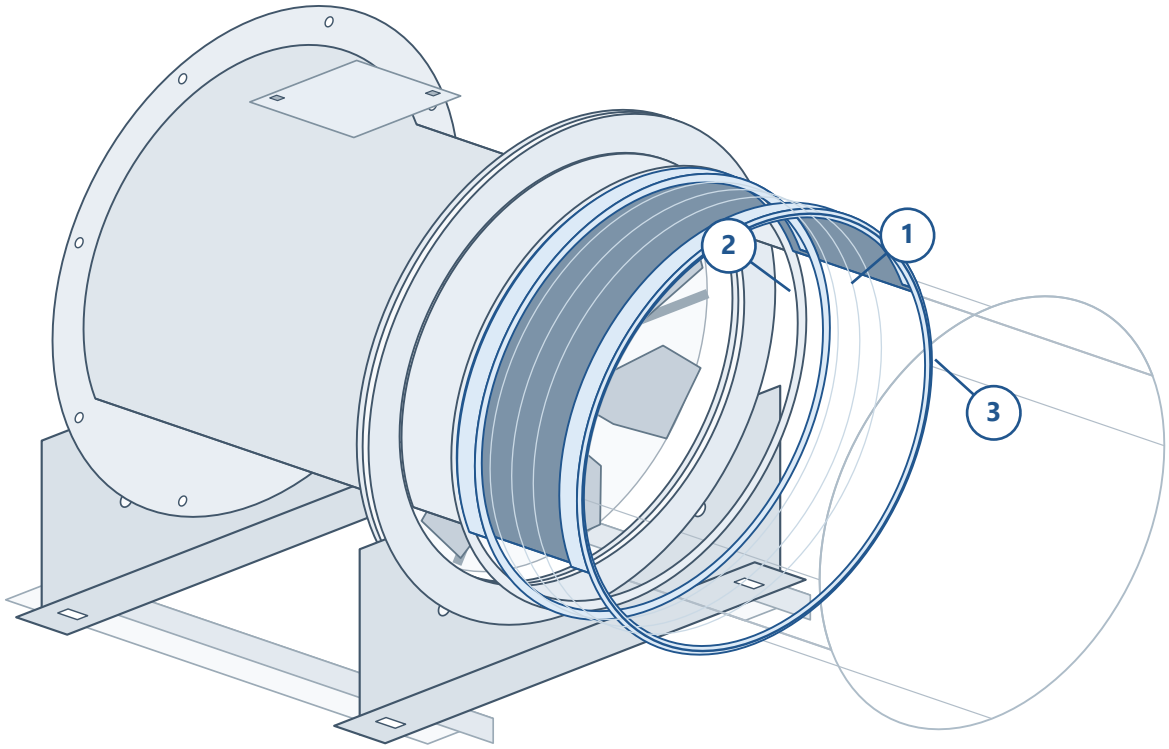

01 / Flexible joint

The highlighted sleeve joins the two circular mating interfaces.

02 / Separate adaptor

The illustrated flange-to-spigot interface is a project-specific arrangement.

03 / Duct interface

Confirm the fixing method, joint loading and service conditions.

The grey mating adaptor is separate from the flexible sleeve. Confirm its design and the actual fan/accessory compatibility for the selected assembly.

VCON-FX-R / TECHNICAL DATA

VCON-FX-R

Rectangular Flexible Connector

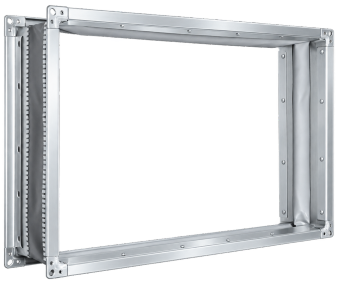

A flexible connection for a rectangular duct interface.

Forms a flexible joint between a ventilation assembly and the adjoining rectangular duct.

Listed model	W / mm	H / mm
VCON-FX-R 30-15	300	150
VCON-FX-R 40-20	400	200
VCON-FX-R 50-25	500	250
VCON-FX-R 50-30	500	300
VCON-FX-R 60-30	600	300
VCON-FX-R 60-35	600	350
VCON-FX-R 70-40	700	400
VCON-FX-R 80-50	800	500
VCON-FX-R 100-50	1,000	500

Choose the width and height of the connection. The 30-15 suffix corresponds to a 300 x 150 mm connection. The application view is a rectangular duct assembly example.

VCON-FX-R / INSTALLATION EXAMPLE

Join the fan to rectangular duct.

Illustrative arrangement only. Other compatible fan models may be used after connection and duty checks.

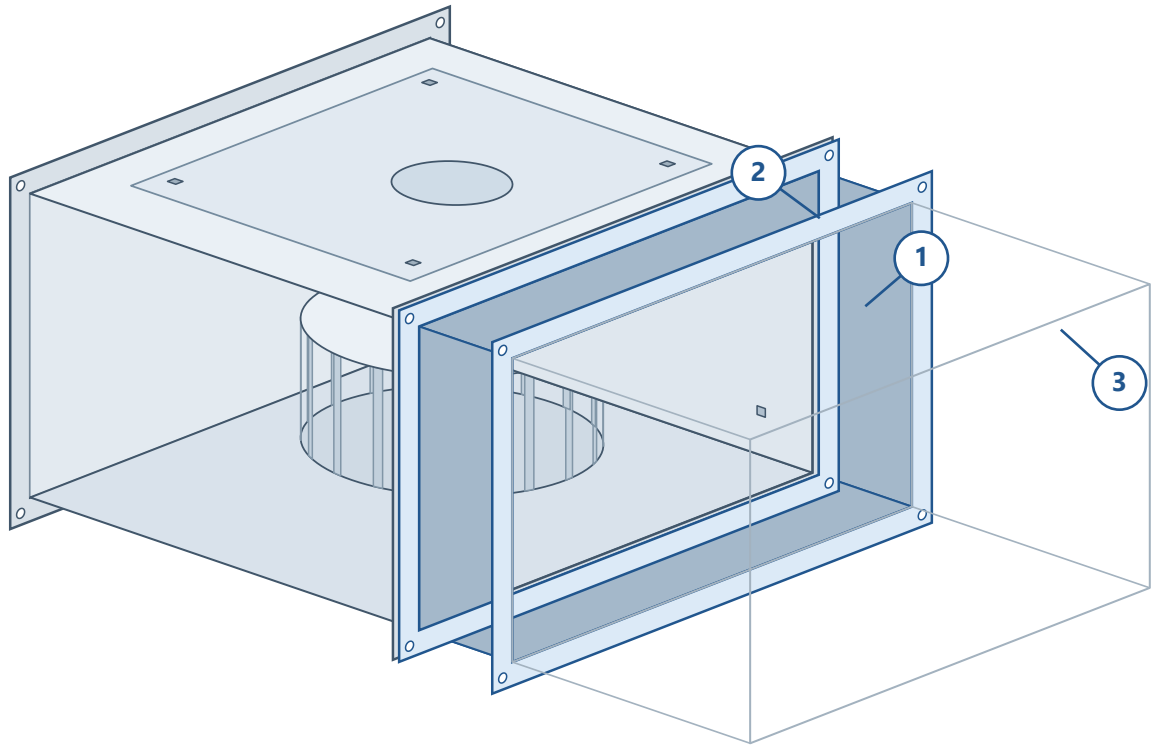

01 / Flexible connector

The highlighted rectangular joint connects to the selected duct fan.

02 / Fan flange

Match the nominal W/H and the actual mating flange pattern.

03 / Rectangular duct

Coordinate the downstream joint, fixing and independent support.

VCON-FX-R is shown in a rectangular connection example. Confirm nominal W/H, joint length, actual flange pattern and support for the offered assembly.

VAXS / TECHNICAL DATA

VAXS

Silencer

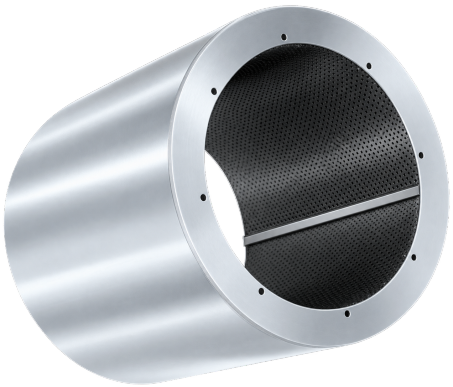

An axial fan silencer for the selected ventilation arrangement.

An acoustic accessory positioned within the fan and duct arrangement to address transmitted fan noise.

Code	Nominal connection Ø / mm
VAXS	400
VAXS	450
VAXS	500
VAXS	560
VAXS	630
VAXS	710
VAXS	800
VAXS	900
VAXS	1,000
VAXS	1,250

Match the nominal connection size. Final attenuation, pressure loss, outer envelope and silencer length require the selected unit data and installation drawing.

VAXS / INSTALLATION EXAMPLE

Place the silencer at the fan connection.

Illustrative arrangement only. Other compatible fan models may be used after connection and duty checks.

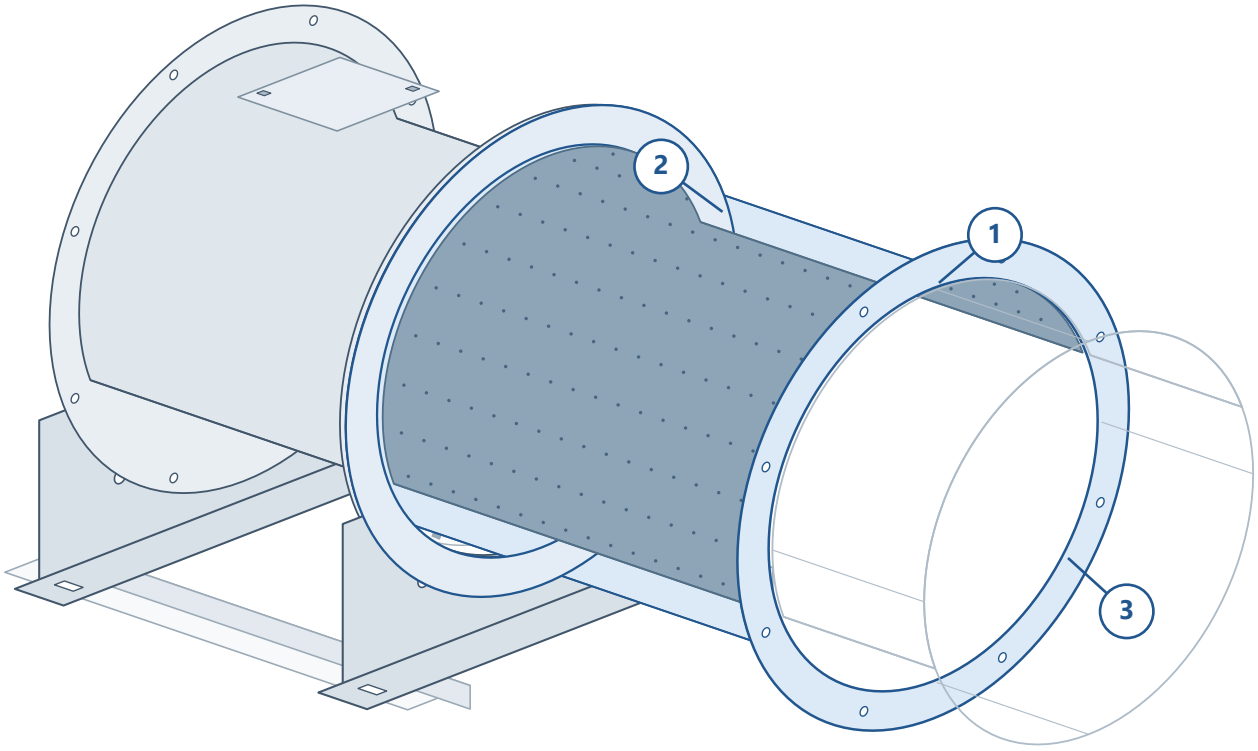

01 / VAXS silencer

The highlighted casing and lining identify the acoustic accessory.

02 / Fan flange

Match the nominal connection and the actual mating flange.

03 / Silencer outlet

Confirm the selected length, downstream connection and support.

Lining principle view. Silencer length, attenuation, pressure loss and support design are selected separately. No numerical acoustic or temperature rating is inferred from the illustration.

VBDD-MCH-R / TECHNICAL DATA

VBDD-MCH-R

Rectangular Back Draft Damper



A rectangular backdraft damper for a ventilation opening or duct connection.

Used where the ventilation arrangement requires a backdraft-control element.

Listed nominal combinations: choose width W by row and height H by column. All dimensions in mm.

W / H	200	300	400	500	600	700	800	900	1,000	1,100	1,200	1,300	1,400	1,500
200	•	•	•	•	•	•	•	•	•	•	•	•	•	•
300	•	•	•	•	•	•	•	•	•	•	•	•	•	•
400	•	•	•	•	•	•	•	•	•	•	•	•	•	•
500	•	•	•	•	•	•	•	•	•	•	•	•	•	•
600	•	•	•	•	•	•	•	•	•	•	•	•	•	•
700	•	•	•	•	•	•	•	•	•	•	•	•	•	•
800	•	•	•	•	•	•	•	•	•	•	•	•	•	•
900	•	•	•	•	•	•	•	•	•	•	•	•	•	•
1,000	•	•	•	•	•	•	•	•	•	•	•	•	•	•
1,100	•	•	•	•	•	•	•	•	•	•	•	•	•	•
1,200	•	•	•	•	•	•	•	•	•	•	•	•	•	•
1,300	•	•	•	•	•	•	•	•	•	•	•	•	•	•
1,400	•	•	•	•	•	•	•	•	•	•	•	•	•	•
1,500	•	•	•	•	•	•	•	•	•	•	•	•	•	•

• = listed combination. Nominal W/H only; frame envelope, depth, fixing and opening characteristics require selection confirmation.

VBDD-MCH-R / RECTANGULAR DUCT APPLICATION

Show the damper between two ducts.

Rectangular duct example. Duct sections are separated to expose the damper frame and mating faces.

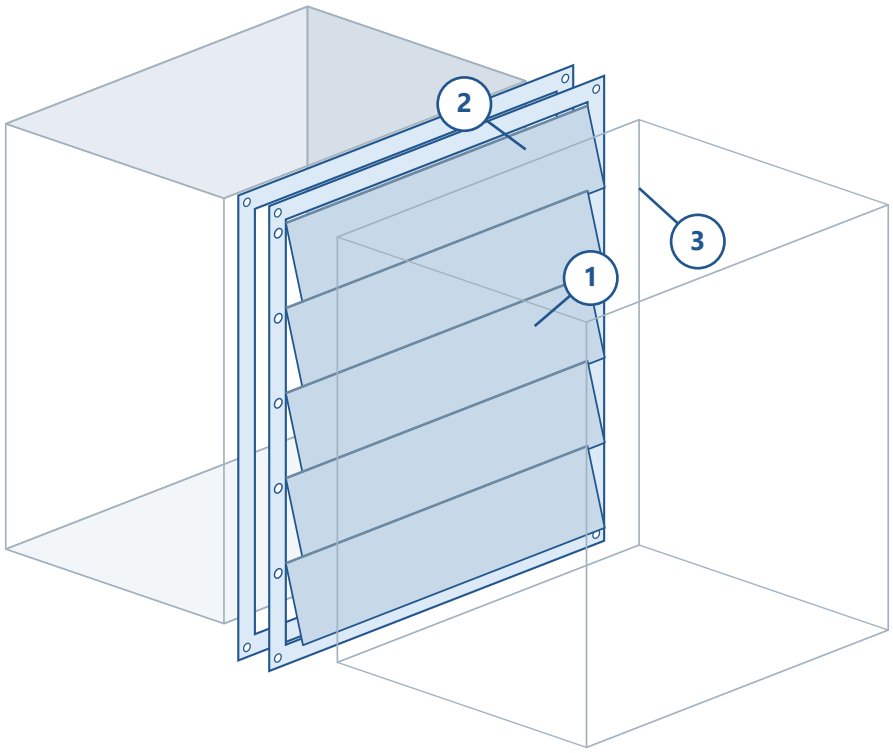

01 / Backdraft damper

The framed blade assembly is shown between rectangular ducts.

02 / Upstream duct

The duct is separated from the frame to expose the connection.

03 / Downstream duct

Outline ductwork keeps the damper and its mating face visible.

Interface view with duct sections separated for clarity. Confirm the final mating position, mounting orientation and blade opening characteristics for the project.

03 / ASSEMBLY COORDINATION

Select the assembly interfaces.

Use each application view as an example with the nominal schedule and the selected equipment connection drawing.

Code	Illustrated interface	Selection confirmation
VMAV	Fan end-flange support	Fan nominal size; foot/fixing drawing
VVIS	Mounting foot to structure	Fan nominal size; spring load/quantity
VCOF	Mating flange	Nominal Ø; flange and sealing pattern
VGG	Exposed fan opening	Nominal Ø; guarding and attachment
VCON	Flanged connection	Nominal Ø; construction and length
VCON-FX-C	Mating adaptor / sleeve	Project-specific interface review
VCON-FX-R	Rectangular connection	Nominal W/H; flange and joint length
VAXS	Circular silencer connection	Nominal Ø; selected acoustic data
VBDD-MCH-R	Rectangular duct connection	Nominal W/H; orientation and response

APPLICATION BASIS

The pictured fans illustrate installation principles, not a restricted list of compatible models. Select the connection, duty, support and service access for the offered assembly. A separate mating adaptor may be required; confirm its design for the selected equipment.

Illustrations do not establish accessory temperature/fire classification or certification of the assembled system. Confirm the offered configuration and supporting documentation.

04 / PROJECT CONNECTION DRAWING

Specify the complete arrangement.

Use the schedule and application view to prepare the actual installation package for the selected fan and accessories.

Coordination topic	Include in the project drawing
Fan & accessory selection	Exact fan model and accessory size; identify any separate mating part.
Mechanical interfaces	Flange outside dimensions, bolt circle, hole pattern, sealing and fixing detail.
Support & isolation	Actual fan/duct masses, support positions, foot details and isolator loads.
Flexible joints	Joint construction/length, fixing method, loading and operating conditions.
Silencing	Selected silencer length, acoustic/pressure-loss data and independent support.
Damper installation	Nominal W/H, frame envelope, orientation, blade travel and opening response.
Release documents	Unit/accessory drawings, material requirements and installation documentation.

Confirm the offered assembly before release.

This catalogue is an English review issue. Catalogue design approval and engineering validation of the installation remain separate.

Fan connections & mounting equipment

CONNECT. SUPPORT. INTEGRATE.

One view. Eight accessory types.

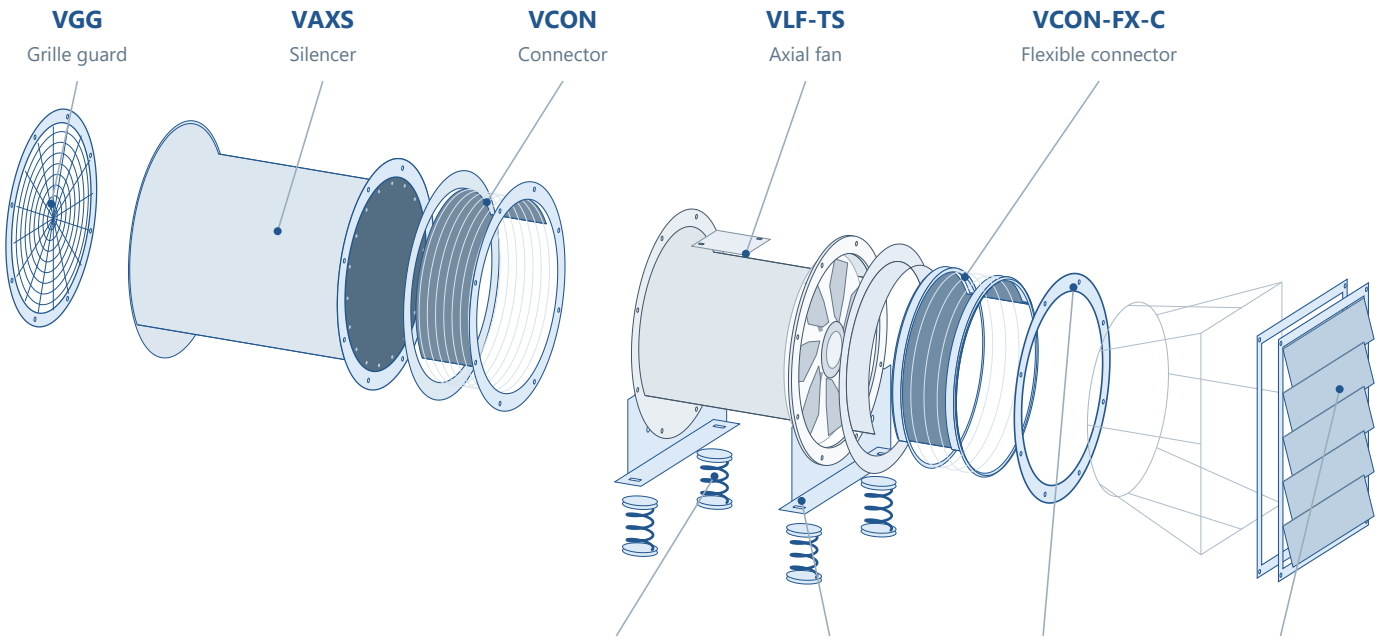

Project-specific transition interface

Exploded application view / not to scale