VOLTVENT®
VENTILATION SYSTEMS

REVIEW DRAFT / VENTILATION PERFORMANCE DATA

VHRU-HP EC SERIES

EC heat pump heat recovery units

VHRU-HP

ec MOTOR

COUNTERFLOW HEAT EXCHANGER

EC FANS / PWM CONTROL



620-3000
Nominal airflow / m^3/h

04
Models in the range

EC
Controlled ventilation

info@voltvent.com | voltvent.com

01 / PRODUCT OVERVIEW

Fresh air. Integrated recovery.

EC heat pump
heat recovery unit

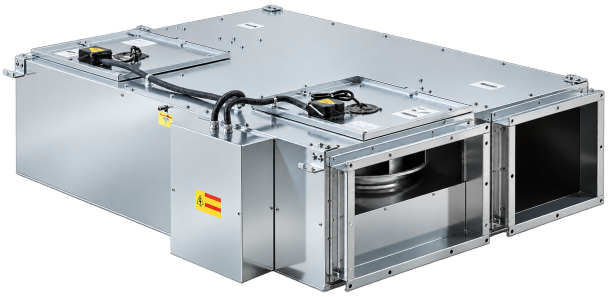

01 EC heat recovery ventilation

Supply and extract fans serve separate air paths. A plate heat exchanger recovers energy from extract air, while a bypass damper supports the configured ventilation modes.

02 Counterflow heat exchanger

Energy transfers between separate extract and supply air streams. The stated recovery figure above 80% applies to the counterflow exchanger and remains separate from fan efficiency.

03 EC fans and control

Supply and extract EC fans support PWM control. The performance curves describe the published 10 V setting. Filters are removable; confirm the grades supplied with the chosen configuration.

SERVICE ACCESS

Provide access beneath the unit for fan, filter and exchanger maintenance. The dimension pages distinguish cabinet spans from mounting and component-removal space.

SERIES AT A GLANCE

Selection parameter	Series reference
Fan supply	230 V / 1 phase / 50 Hz
Fan technology	EC / PWM control / published 10 V setting
Heat exchanger	Counterflow / stated recovery above 80%
Filtration	Confirm supplied configuration
Installation	Indoors / service panels accessible below

Exchanger recovery and fan efficiency are separate quantities. Performance figures cover ventilation at the published setting. Confirm the filter arrangement and optional equipment for the supplied configuration.

02 / TECHNICAL DATA

Select the ventilation duty.

Ventilation and exchanger recovery data.

NOMINAL FAN DATA / 230 V / 1 PHASE / 50 Hz

Model	Airflow m^3/h	Fan input W	Fan current A	Fan speed rpm	Max. static Pa	Mass kg
VHRU-HP EC 700	620	217	1.7	4400	770	72
VHRU-HP EC 1000	1000	150	-	2600	700	110
VHRU-HP EC 2000	2000	576	2.45	3000	950	212
VHRU-HP EC 3000	3000	550	2.45	2230	720	262

FAN RATING BASIS

Fan input power, current and speed follow the published selection references without multiplication. They are not a combined two-fan unit total and exclude optional heating. For model 2000, the declared maximum static pressure of 950 Pa is separate from the listed reference curve.

HEAT RECOVERY & OPTIONS

Parameter	Available reference
Heat-exchanger recovery	Above 80% / stated exchanger figure
Filter arrangement	Confirm supplied configuration
Optional electric heating	Power not specified

A dash means the value is not supplied: current for VHRU-HP EC 1000 remains unavailable. Model-specific acoustic levels and optional heater power are not stated in the verified record.

The figures above describe ventilation and exchanger recovery. Heat-pump heating/cooling capacity, system input power, COP and EER are not specified.

03 / AIR PERFORMANCE

Fan Performance Curves

VHRU-HP EC 700

230 V / 1 phase / 50 Hz / 10 V setting

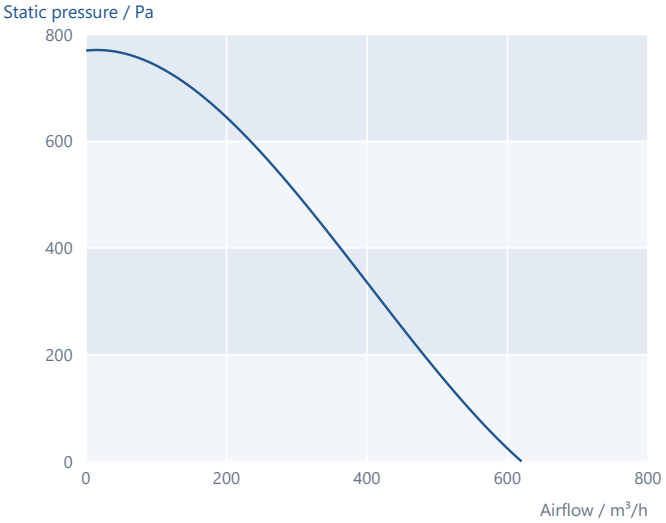

VHRU-HP EC 1000

230 V / 1 phase / 50 Hz / 10 V setting

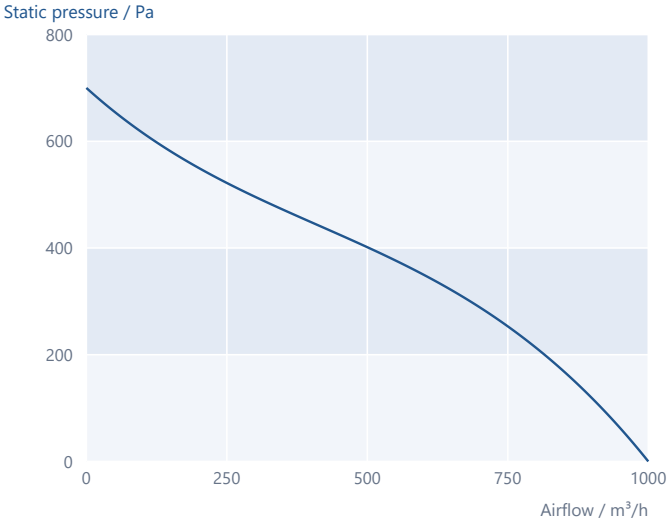

VHRU-HP EC 2000

230 V / 1 phase / 50 Hz / 10 V setting

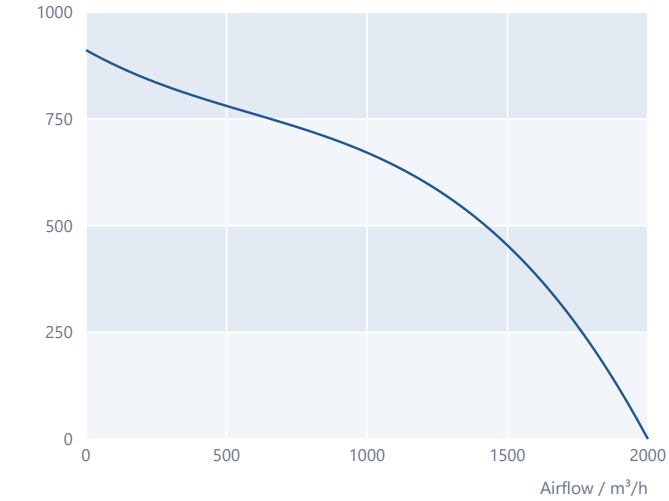

VHRU-HP EC 3000

230 V / 1 phase / 50 Hz / 10 V setting

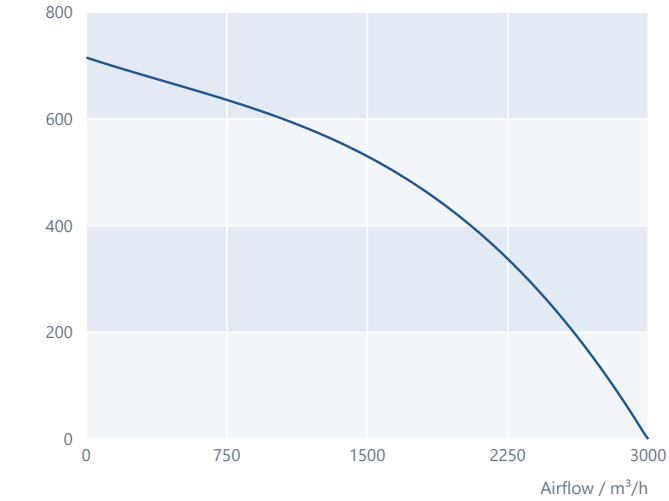

Curves apply to the published 10 V setting and stop at each model's stated airflow limit. Model-specific scales are used. No speed regulation, pressure doubling or extension beyond the published airflow range is applied.

Ventilation performance and heat-exchanger recovery are separate quantities.

04 / DIMENSIONS

Cabinet and connection spans.

REPRESENTATIVE SERIES OUTLINE

All dimensions in mm

SIDE VIEW

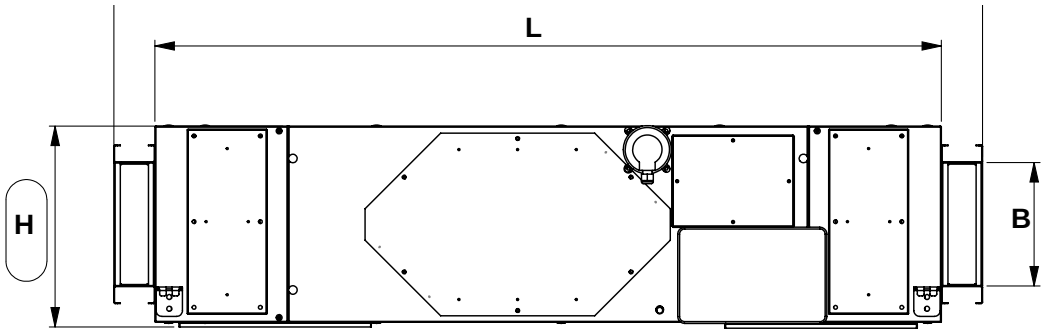

FRONT VIEW

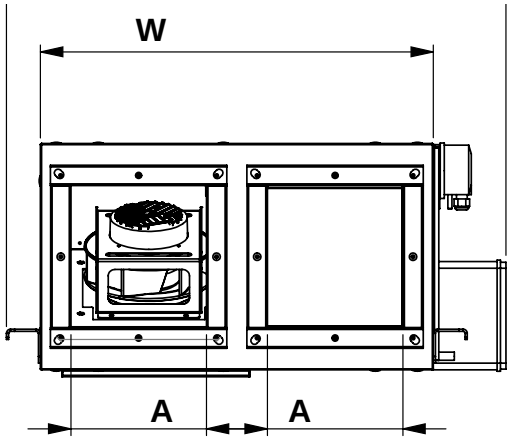

Model	L	W	H	A	B	C*
VHRU-HP EC 700	1340	580	342	200	210	250
VHRU-HP EC 1000	1450	855	383	335	210	300
VHRU-HP EC 2000	2030	1650	443	700	210	460
VHRU-HP EC 3000	1990	2050	515	800	310	550

L, W and H identify the cabinet spans; A and B identify the openings. C* is the fan-removal space, given numerically. Original CAD geometry is retained with generic labels; use the model table and do not scale the views.

05 / MOUNTING & SERVICE

Make room for maintenance.

SPLIT MOUNTING SPAN / MODELS 2000-3000

All dimensions in mm

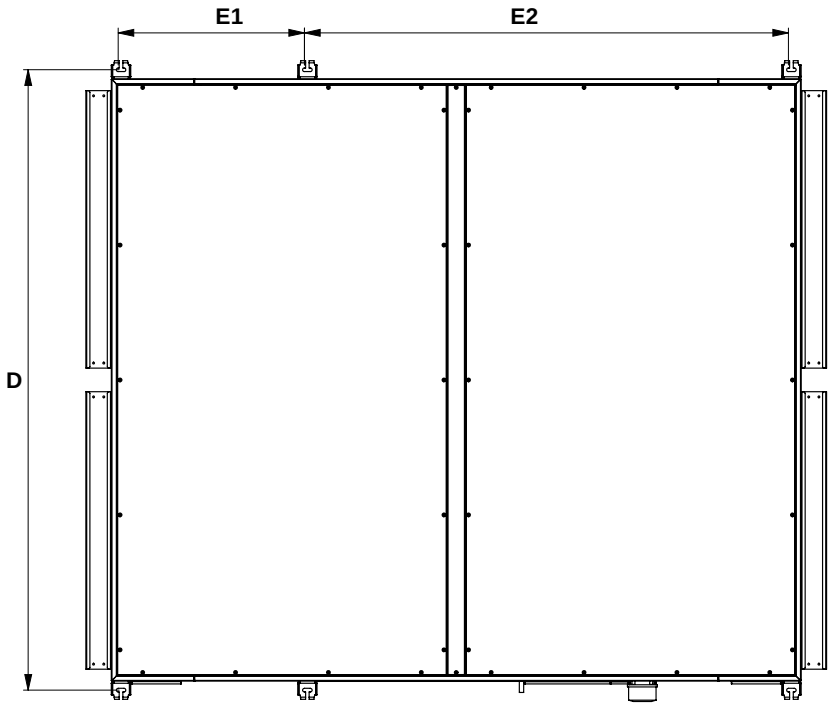

Model	D	E	E1	E2	F*
VHRU-HP EC 700	646	1291	-	-	500
VHRU-HP EC 1000	921	1401	-	-	700
VHRU-HP EC 2000	1704	1837	511	1326	840
VHRU-HP EC 3000	2004	1937	511	1426	1000

Models 700/1000 state E only; a dash indicates that no subdivision is supplied. For 2000/3000, E = E1 + E2. F* is the heat-exchanger removal space. Reserve at least H below the unit and check the component-removal requirements C and F.

Keep service panels facing downward. Install level, with trapped condensate drainage and independently supported ducts.

06 / ELECTRICAL & CONTROLS

Power and control connections.

Series supply: 230 V / 1 phase / 50 Hz. Board terminal functions are listed below.

Pins	Terminals	Board function
1-2	AC1 / N	AC supply fan output / 0-230 V AC
3-4	AC2 / N	AC exhaust fan output / 0-230 V AC
5-6	L / N	Power input / 230 V AC, 50/60 Hz
7-11	REL1-REL4 / COM	Digital outputs / dry contact
12-13	PLC / GND	Two-wire room panel
14-16	A / B / GND	BMS / RS485 MODBUS RTU
17-24	UI1-UI4 / GND	Universal inputs / contact, 0-10 V, NTC thermistor

EC models use the EC1/EC2 fan-control connections below. AC1/AC2 are the board's AC-output references.

EC1 / SUPPLY FAN

(10V_EC1 Input) / 24V Output
PWM1 Output (AO4: PWM)
TACHO1 Input
GND

EC2 / EXHAUST FAN

(10V_EC2 Input) / 24V Output
PWM2 Output (AO5: PWM)
TACHO2 Input
GND

SERVICE & EXPANSION

X16 / USB: service and update port. X1/X2: optional I/O expansion with UI5-UI8, DI9-DI14, DO15-DO17 and AO1-AO5.

This is a board terminal reference. Complete unit, mains and accessory wiring must follow the electrical documentation supplied with the ordered configuration.

VHRU-HP

EC MOTOR

EC heat pump
heat recovery units

VOLTVENT®
VENTILATION SYSTEMS

info@voltvent.com | voltvent.com