VOLTVENT®
VENTILATION SYSTEMS

VKF-R SERIES

Kitchen exhaust box fans

VKF-R

MOTOR OUTSIDE THE AIRSTREAM

POWDER-COATED STEEL CASING



280-710	09	50 Hz
Duct connection range / mm	Models in the range	Three-phase AC

info@voltvent.com | voltvent.com

01 / PRODUCT & TECHNICAL DATA

Compact form. Clear construction.



01 Motor outside the airstream

Motor separated from the transported kitchen exhaust air and accessible through the service compartment.

02 Aluminium impeller

Centrifugal impeller for duct exhaust and kitchen hood applications.

03 Powder-coated steel casing

Galvanized sheet-metal cabinet with an inspection hatch and circular duct connections.

MODEL SPECIFICATIONS

Nominal reference values / 50 Hz

Model	Duct / mm	Max. airflow* m^3/h	Reference power W / at 0 Pa	Reference speed rpm / at 0 Pa	Supply V / phase
VKF-R 280	280	1100	180	1450	380 / 3
VKF-R 315	315	1600	250	1469	380 / 3
VKF-R 355	355	2300	370	1471	380 / 3
VKF-R 400	400	3300	550	1478	380 / 3
VKF-R 450	450	5000	750	1454	380 / 3
VKF-R 500	500	7000	1100	1462	380 / 3
VKF-R 560	560	9800	1500	1464	380 / 3
VKF-R 630	630	14000	3000	1465	380 / 3
VKF-R 710	710	13000	4000	950	380 / 3

* Maximum airflow is the upper limit of the supplied performance-curve range, rounded to whole m^3/h; it is not a selected duty-point value. Other values are 50 Hz catalogue references at 0 Pa. Actual input power and speed depend on the duty point. Motor current and unit weight were not supplied.

02 / AIR PERFORMANCE / 01

Fan Performance Curves

VKF-R 280

3~380 V / 50 Hz

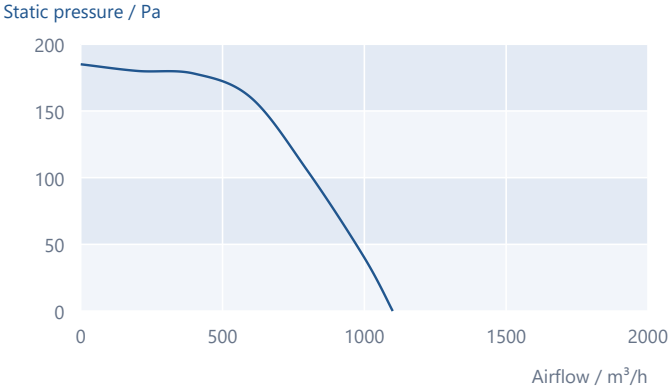

VKF-R 315

3~380 V / 50 Hz

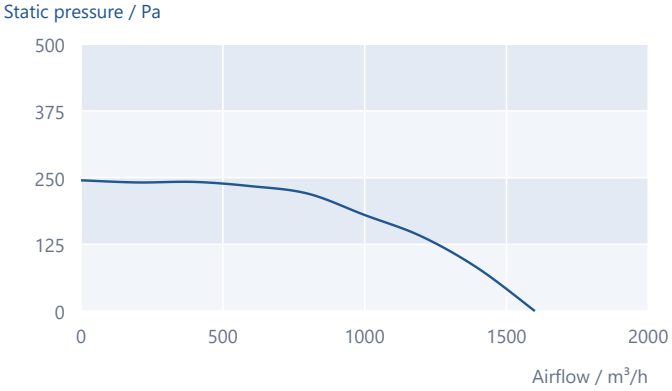

VKF-R 355

3~380 V / 50 Hz

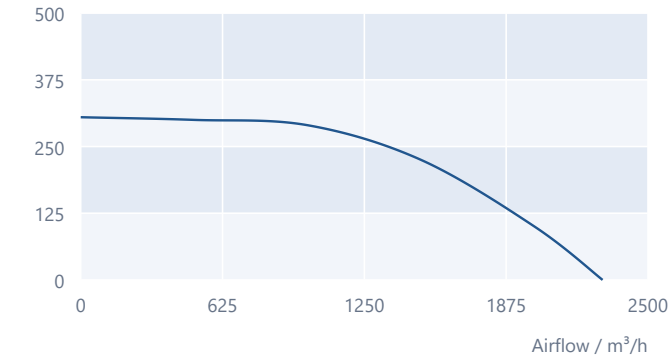

VKF-R 400

3~380 V / 50 Hz

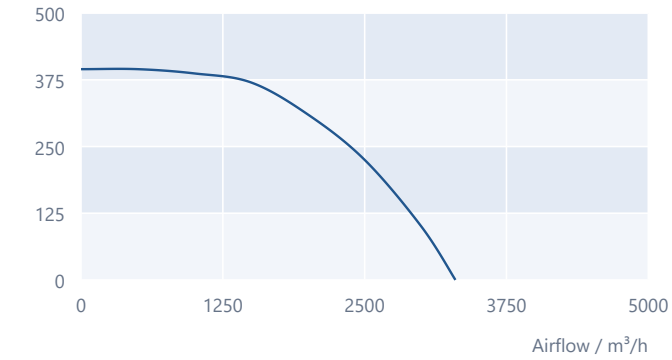

VKF-R 450

3~380 V / 50 Hz

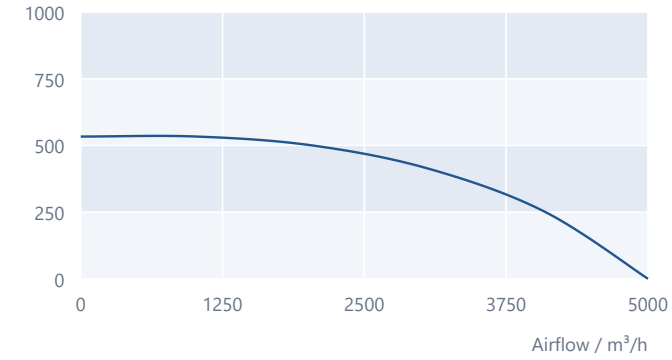

Model-specific axis scales. Listed 50 Hz curves shown only within their ranges. Maximum airflow and pressure are separate endpoints.

02 / AIR PERFORMANCE / 02

Fan Performance Curves

VKF-R 500

3~380 V / 50 Hz

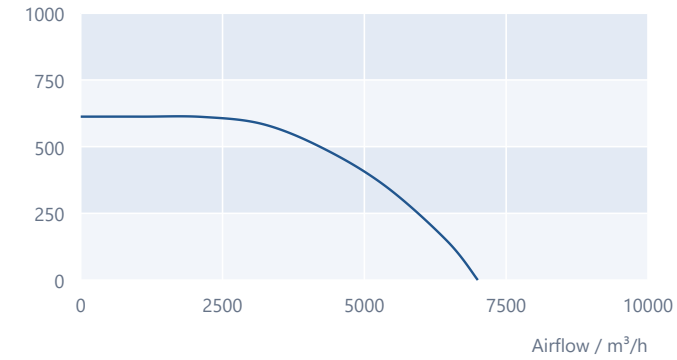

VKF-R 560

3~380 V / 50 Hz

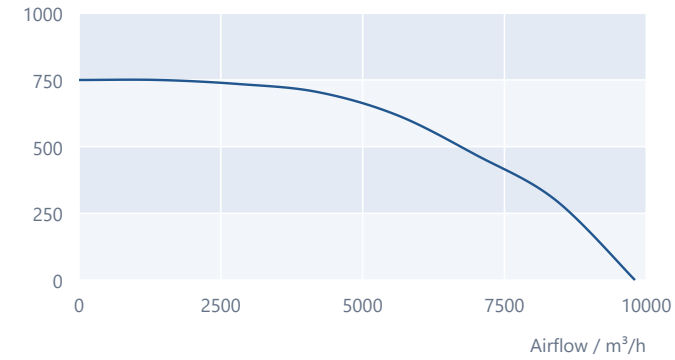

VKF-R 630

3~380 V / 50 Hz

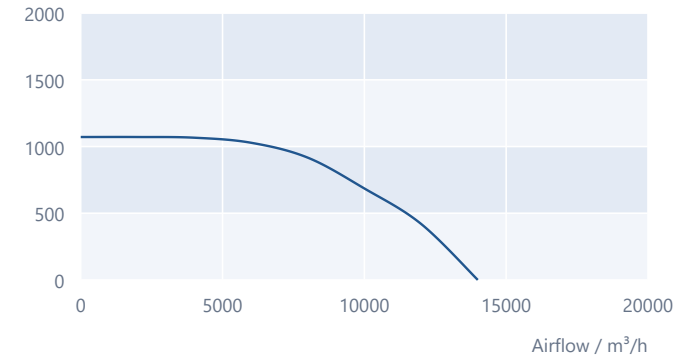

VKF-R 710

3~380 V / 50 Hz

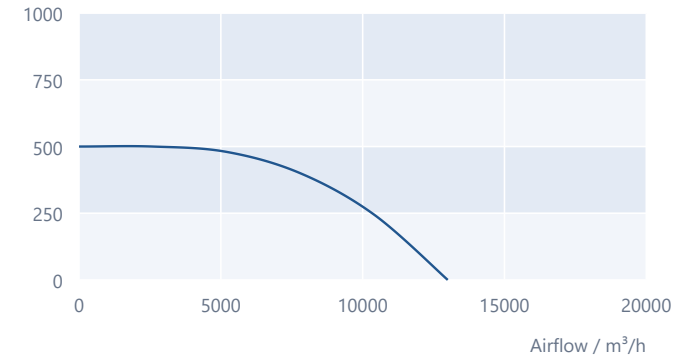

Model-specific axis scales. Listed 50 Hz curves shown only within their ranges. Maximum airflow and pressure are separate endpoints.

03 / DIMENSIONAL DATA

Plan the installation.

FAMILY DRAWING

All dimensions in mm

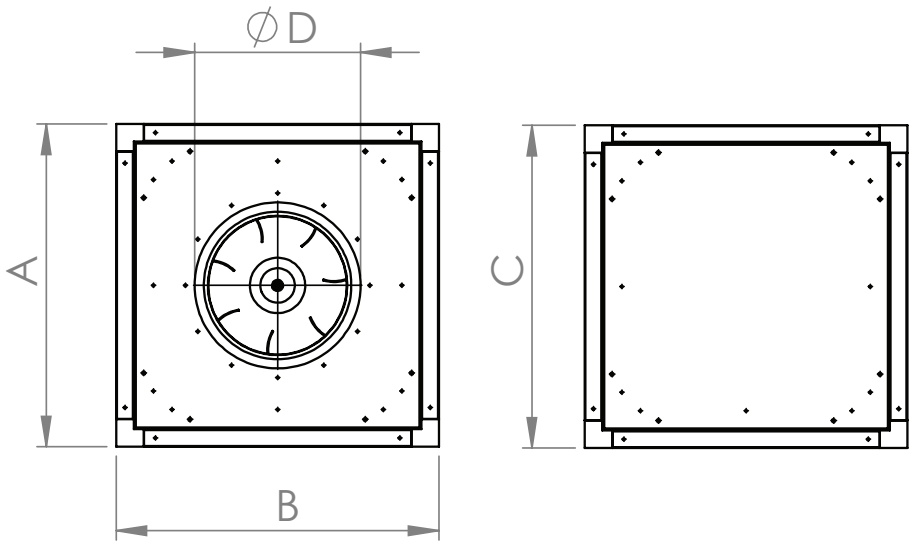

Model	A	B	C	Ø D
VKF-R 280	450	450	450	280
VKF-R 315	500	500	500	315
VKF-R 355	500	500	500	355
VKF-R 400	600	600	600	400
VKF-R 450	700	700	700	450
VKF-R 500	800	800	800	500
VKF-R 560	900	900	900	560
VKF-R 630	1000	1000	1000	630
VKF-R 710	1100	1100	1100	710

VKF-R series / nominal duct connections 280-710 mm

Family drawing. Dimension values follow the model records in Voltvent Selection Software.

04 / INSTALLATION & MOTOR DATA

Plan for access and service.

01 Duct connection

Match the circular D connection to the selected model. Use dimensions A-D to plan the casing envelope and mounting space.

02 Installation & access

Support the cabinet securely. Allow clearance for the inspection hatch and motor service compartment. Keep access clear for cleaning and maintenance.

03 Applications

Kitchen hood exhaust and duct ventilation applications. Keep the airflow path clear and respect the stated operating temperature range.

MOTOR & OPERATING CONDITIONS

Parameter	Catalogue reference
Electrical supply	3~380 V / 50 Hz
Insulation / protection	Class F / IP55
Motor efficiency class	IE3
Duty classification	S1
Operating temperature	-20 to +50 °C

Use the electrical connection diagram supplied with the actual unit. The supplied star (Y) connection diagram is on the next page. Disconnect the supply before servicing.

05 / ELECTRICAL CONNECTION

Three-phase star connection.

VKF-R / 380 V / 50 Hz - STAR (Y)

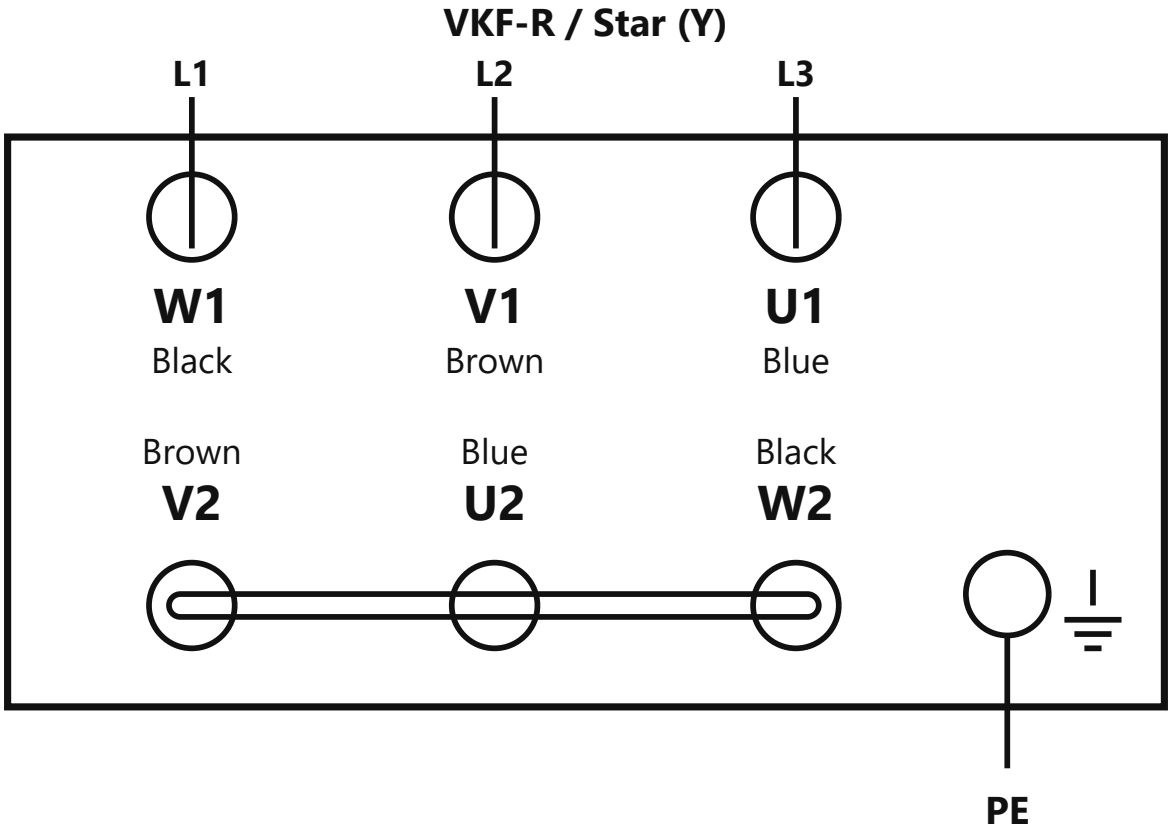

CONNECTION KEY

Marking	Function
L1 / L2 / L3	Phase supply
W1 / V1 / U1	Supply-connected terminals, in the shown order
V2 / U2 / W2	Star point / terminals linked as shown
PE	Protective earth

Terminal codes, conductor colours and the star-point link follow the supplied drawing. Use the actual motor nameplate and supplied terminal diagram. Disconnect the electrical supply before servicing.

VKF-R

Kitchen exhaust box fans

VOLTVENT®
VENTILATION SYSTEMS

info@voltvent.com | voltvent.com