VOLTVENT®
VENTILATION SYSTEMS

VENTILATION ACCESSORIES

Controls

VSC / VFI



VSC

Fan speed controller



VFI

Three-phase frequency converter

Control the fan. Coordinate the drive.

Technical catalogue

Selection schedules & installation interfaces

EN / V1 / REVIEW

01 / PRODUCT INDEX

Two control routes. One selection brief.

Select the controller around the motor, supply and operating duty; a fan model name alone does not establish compatibility.



VSC

Fan speed controller

Manual speed control for a compatible single-phase fan motor. Three listed current-class entries.

04 / DATA 05 / INSTALLATION



VFI

Three-phase frequency converter

Frequency conversion for a compatible three-phase fan motor. Seventeen listed selection entries.

Supply brand depends on stock at order.

06 / DATA 07 / INSTALLATION

Product images are illustrative. Final housing, dimensions, supply and electrical configuration depend on the selected device variant.

02 / SELECTION OVERVIEW

Match the control method to the motor.

Single-phase speed control and three-phase frequency conversion are different selection routes.

Selection	VSC	VFI
Function	Manual fan speed controller	Frequency converter for a three-phase motor
Motor basis	Motor suitable for the offered single-phase control method	Motor suitable for the selected converter and operating range
Listed selection value	Current class / A	Power class / kW; voltage designation where listed
Supply selection	Confirm the selected device supply, motor circuit and control method	Confirm input phase/range, output class and motor winding
Physical interface	Case fixing, cable entries and accessible operating knob	Selected enclosure, cooling space, mounting and keypad access

SELECT THE COMPLETE ASSEMBLY

Confirm the exact motor and control configuration, full-load current, starting and low-speed behaviour, thermal protection and project control requirements. No universal fan-family compatibility is assigned.

VSC / CURRENT SCHEDULE

VSC

Fan speed controller



Manual speed control for a compatible single-phase fan motor. Match the listed current class to the offered device and the actual motor/control arrangement.

3 listed selection entries

Voltvent model	Listed current class / A
VSC 1 (2,50A)	2.50
VSC 2 (5,00A)	5.00
VSC 3 (7,50A)	7.50

CONFIRM THE OFFERED DEVICE

Supply voltage, control method, current duty, minimum speed, enclosure protection and motor compatibility require the selected device documentation. No control-frequency range or universal motor suitability is inferred from the current class.

VSC / INSTALLATION EXAMPLE

Wall controller installation

Dimensionless installation context. Follow the selected device and motor documentation for the actual circuit and fixing.

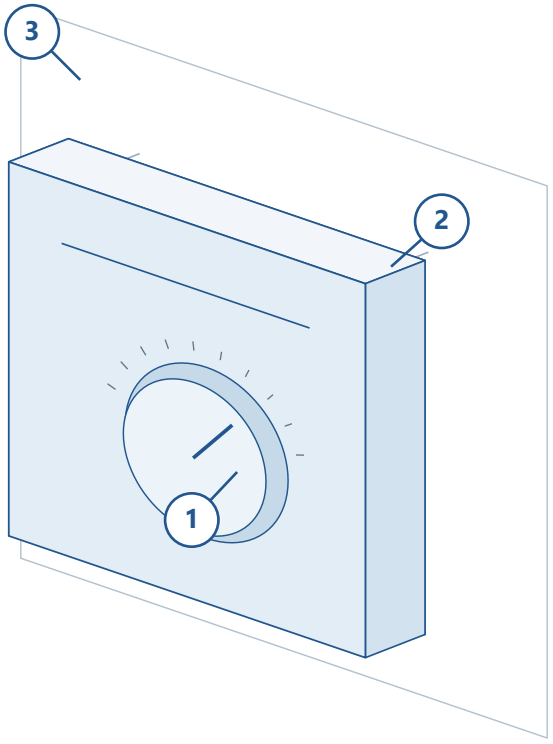

01 / Operating control

Keep the operating knob visible and accessible. Confirm the permitted control range for the selected motor.

02 / Case fixing

Use the offered enclosure drawing for fixing points and cable entries. No fixing pitch or enclosure size is assigned here.

03 / Installation context

Coordinate the supporting wall, cable route and access. Supply isolation and circuit protection are selected separately.

The drawing identifies physical interfaces only. It is not a terminal diagram and does not prescribe live conductor, neutral, earth or motor-capacitor connections.

VFI / POWER SCHEDULE

VFI

Three-phase frequency converter



Illustrative product image / selected enclosure may differ

A frequency converter for a compatible three-phase fan motor. Select the exact supply/output class and motor arrangement before confirming the electrical duty.

BRAND SUPPLY AT ORDER

At the time of order, the brand supplied will depend on stock availability. Mitsubishi, Siemens, Danfoss or local brands may be supplied. The selected unit will follow the confirmed order specification.

17 listed selection entries

Voltvent model	Power class / kW	Voltage designation / V
VFI 0,75 (220V)	0.75	220
VFI 1,10 (220V)	1.10	220
VFI 2,20 (220V)	2.20	220
VFI 0,75 (380V)	0.75	380
VFI 1,10 (380V)	1.10	380
VFI 2,20 (380V)	2.20	380
VFI 3,00	3.00	380
VFI 4,00	4.00	380
VFI 5,50	5.50	380
VFI 7,50	7.50	380
VFI 11,00	11.00	380
VFI 15,00	15.00	380
VFI 18,50	18.50	380
VFI 22,00	22.00	380
VFI 30,00	30.00	380
VFI 37,00	37.00	380
VFI 45,00	45.00	380

Voltage designations are selection labels, not confirmed input/output ranges. Confirm supply phase, input range, output voltage, rated output current and motor winding for the offered variant.

VFI / INSTALLATION EXAMPLE

Converter mounting and access

Illustrative enclosure format only. Actual mounting, cooling space and connections depend on the selected converter.

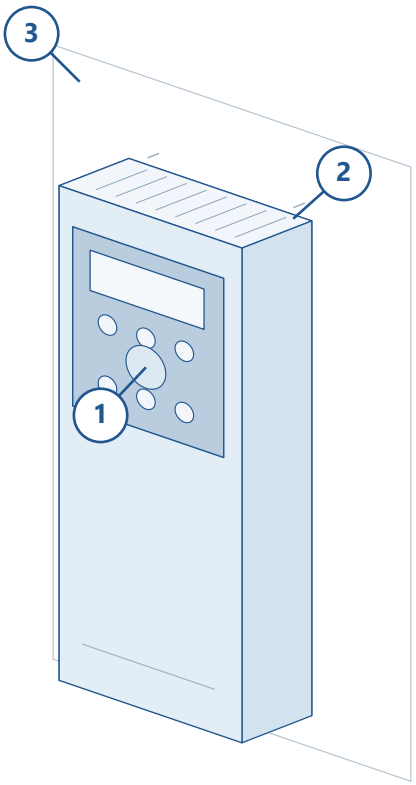

01 / Operator interface

Keep the selected keypad/display accessible. Identify the actual commands and indications in the project control description.

02 / Mounting interface

Confirm the selected enclosure drawing, fixings and required cooling clearances. Do not scale dimensions from this illustration.

03 / Supporting structure

Coordinate the cabinet or mounting surface, cable routing and service access for the offered drive assembly.

No IP class, ambient limit, cooling clearance, terminal designation, protection function or certified configuration is assigned from the illustrated housing.

03 / FUNCTIONAL INTEGRATION

Coordinate power and control paths.

Conceptual architecture only. The blocks below are not a wiring diagram or a statement of interchangeable motor/controller types.

SINGLE-PHASE CONTROLLER ROUTE

Supply selection

Selected supply, isolation and circuit protection.

→

VSC

Selected device and project control method.

→

Fan motor

Compatible single-phase motor.

FREQUENCY-CONVERTER ROUTE

Supply selection

Selected supply, isolation and circuit protection.

→

VFI

Selected device and project control method.

→

Fan motor

Compatible three-phase motor.

Define commands, any selected feedback/interlocks, motor protection and the required response to start, stop and loss of supply. A voltage tag or power class alone does not define the circuit.

04 / PROJECT RELEASE

Record the selected controller.

Use the catalogue selection entry with the actual electrical, mechanical and commissioning documentation.

Required record	Complete for the offered assembly
Identification	Exact Voltvent selection entry, supplied brand, controller variant and motor nameplate data.
Electrical duty	Supply phase/range; output class/current; motor winding; control method and permitted speed range.
Physical drawing	Released enclosure dimensions, mounting pattern, cable entries, cooling clearances and access.
Circuit documentation	Selected terminal diagram, isolation, protection, earthing and any motor-specific connection requirements.
Operation	Commands, selected feedback/interlocks, thermal behaviour and response to loss of supply.
Commissioning	Selected settings, motor/control checks and the required installation/maintenance records.

Catalogue review and engineering release remain separate. The listed 3 current-class and 17 power-selection entries preserve the listed Voltvent schedule; unverified variants or ratings are not automatically added.

VOLTVENT®
VENTILATION SYSTEMS

VENTILATION ACCESSORIES

Controls

VSC / VFI



VSC

Fan speed controller



VFI

Three-phase frequency converter

Control the fan. Coordinate the drive.

Voltvent Ventilation Systems

www.voltvent.com

EN / V1 / REVIEW