VOLTVENT®
VENTILATION SYSTEMS

VCAF SERIES

Axial inline duct fans

VCAF

AXIAL FLOW

EXTERNAL ROTOR MOTOR



200-350	04	50 Hz
Nominal duct size / mm	Models in the range	Single-phase AC

info@voltvent.com | voltvent.com

01 / PRODUCT & TECHNICAL DATA

Compact form. Clear construction.

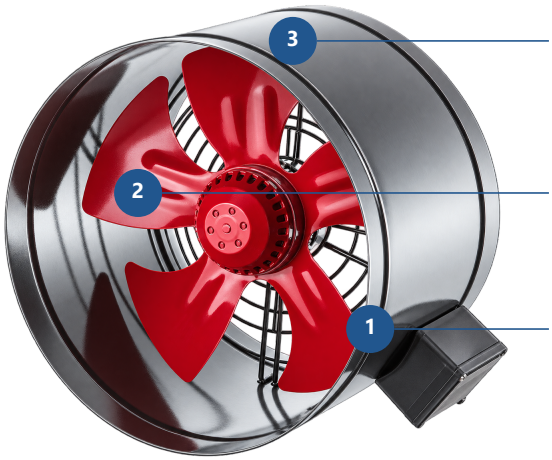

01 **Motor & terminal box**

External rotor AC motor with a run capacitor and accessible electrical connection.

02 **Axial impeller**

Sheet-steel blades for airflow through circular ducts. Protective wire guard fitted.

03 **Steel casing**

Powder-coated cylindrical sheet-steel housing for inline installation.

MODEL SPECIFICATIONS

Nominal reference values / 50 Hz

Model	Duct size mm	Max. airflow* m^3/h	Input power W	Current A	Speed rpm	Weight kg
VCAF 200	200	682	63	0.28	2750	2.7
VCAF 250	250	1485	100	0.5	2700	3.6
VCAF 300	300	2020	140	0.6	2600	4.6
VCAF 350	350	3110	200	0.9	2050	5.6

OPERATING CONDITIONS

Single-phase 230 V / 50 Hz. Motor protection IP44, insulation Class B.
Operating range: -20 to +40 °C. Maximum transported-air temperature: 40 °C.
Optional voltage-regulator speed control. Curves show full-voltage operation.

* Maximum airflow is the upper limit of the supplied performance-curve range, rounded to whole m^3/h; it is not a selected duty-point value. Other nominal ratings are reference values; actual power, current and speed depend on the operating point.

02 / AIR PERFORMANCE / 01

Fan Performance Curves

VCAF 200

1~230 V / 50 Hz

Static pressure / Pa

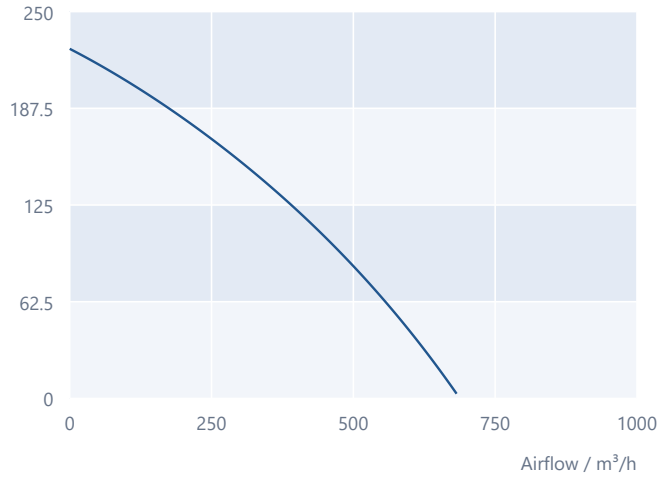

VCAF 250

1~230 V / 50 Hz

Static pressure / Pa

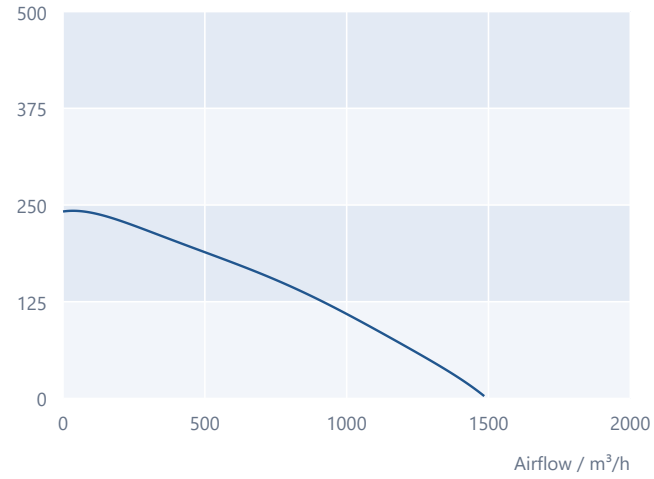

VCAF 300

1~230 V / 50 Hz

Static pressure / Pa

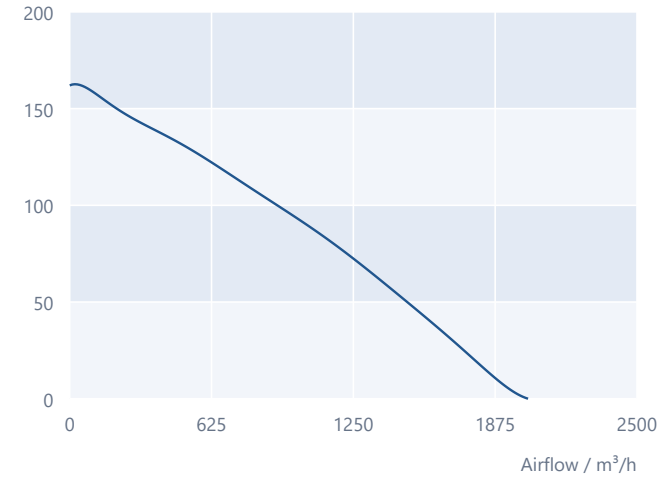

VCAF 350

1~230 V / 50 Hz

Static pressure / Pa

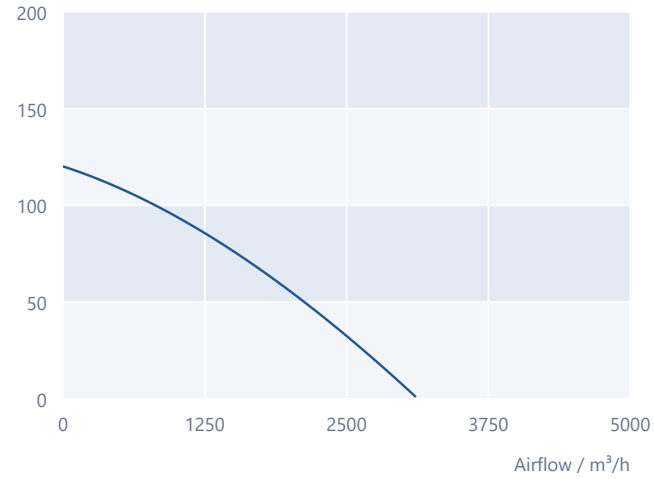

Model-specific axis scales. Listed 50 Hz curves shown only within their ranges. Maximum airflow and pressure are separate endpoints.

03 / DIMENSIONAL DATA

Plan the installation.

FAMILY DRAWING

All dimensions in mm

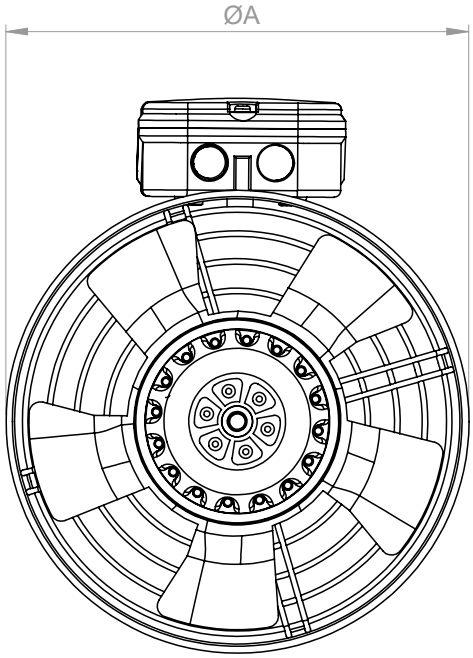

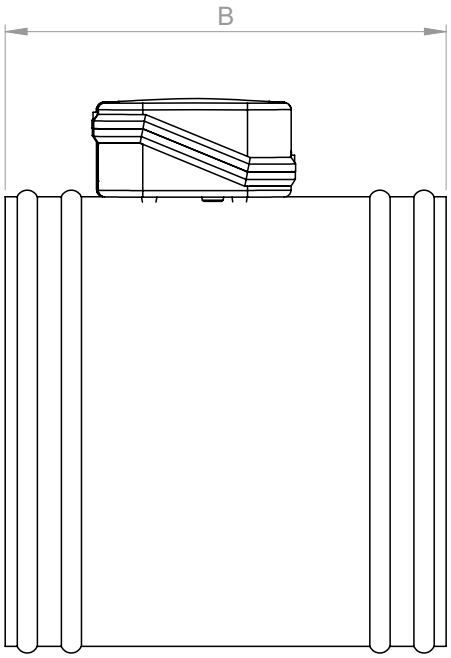

Model	Nominal duct size / mm	Ø A / mm	B / mm
VCAF 200	200	200	200
VCAF 250	250	250	250
VCAF 300	300	300	250
VCAF 350	350	355	250

INSTALLATION

Support the casing securely. Allow access to the terminal box, impeller and guard for inspection and maintenance. Dimension A is the actual casing diameter; VCAF 350 uses A = 355 mm.

04 / ELECTRICAL CONNECTION

Single-phase connection.

VCAF SERIES

1~230 V / 50 Hz

1

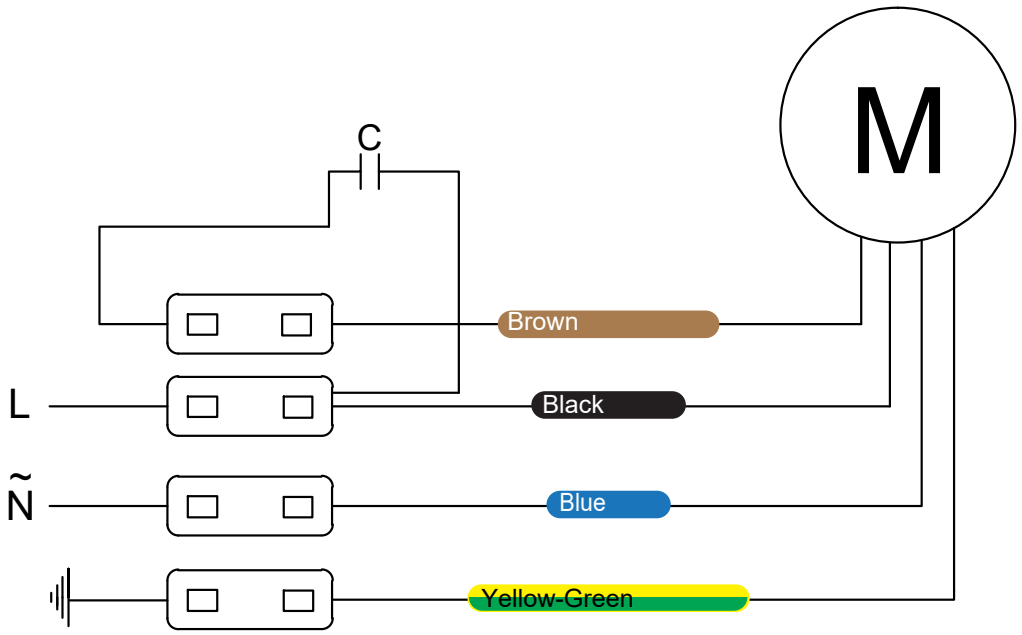

DIAGRAM LEGEND

L	Live	N	Neutral	C	Run capacitor

Capacitor / µF

VCAF 200: 2 | VCAF 250: 4 | VCAF 300: 5 | VCAF 350: 5

Refer to the wiring diagram supplied with the actual unit before installation.

VCAF

Axial inline duct fans



info@voltvent.com | voltvent.com