VSBF SERIES

Silent bathroom extractor fans

VSBF

WHITE ABS CONSTRUCTION

WALL / WINDOW INSTALLATION



90-320	03	50 Hz
Nominal airflow / m^3/h	Models in the range	Performance frequency

01 / PRODUCT OVERVIEW

Local extraction. A clean white finish.



01 Bathroom and toilet extraction

Local extract ventilation for bathrooms and toilets. The compact front grille suits domestic interiors.

02 White ABS construction

White ABS casing and impeller, with a concentric protective grille. The AC external-rotor motor is in the airstream.

03 Wall or window installation

A circular connection for the selected model. Keep the front grille accessible for inspection and cleaning.

SERIES AT A GLANCE

Selection parameter	Series reference
Supply	230 V / single phase / 50 Hz
Motor protection / insulation	IP25 / class F
Working temperature	-20 to +50 °C
Nominal connection sizes	100 / 125 / 150 mm
Construction	White ABS casing and impeller

Model 150 has an actual outlet diameter of 149 mm. Use the model-specific dimension row when coordinating the connection.

02 / TECHNICAL DATA

Select the local extract duty.

03 AC CONFIGURATIONS / 50 Hz

Model	Nominal Q m^3/h	Curve Q limit m^3/h	Power W	Speed rpm	Curve Ps max. Pa	Noise* dB(A)
VSBF 100	90	108.52	8.4	2800	49.99	25
VSBF 125	180	213.31	10	2800	59.99	30
VSBF 150	320	357.14	20	2800	65.00	33

NOMINAL RATINGS

90 / 180 / 320 m^3/h

Published airflow, power and speed references at 0 Pa. These figures retain their nominal catalogue basis.

PRESSURE-CURVE LIMITS

Separate original data.

The pressure curves end at higher airflow values. Their full original ranges are retained; they are not adjusted to the nominal airflow figures.

* Published noise figures are retained as given. Sound-pressure/sound-power basis, measurement distance and octave-band spectra are not specified.

Performance reference	Basis
Nominal rating reference	0 Pa
Pressure-curve reference	Original 50 Hz curve points
Supply reference	230 V / single phase / 50 Hz

Power and speed are nominal references. Duty-dependent input, current, efficiency and SFP data are not supplied.

03 / AIR PERFORMANCE

Fan Performance Curves

VSBF 100

230 V / single phase / 50 Hz

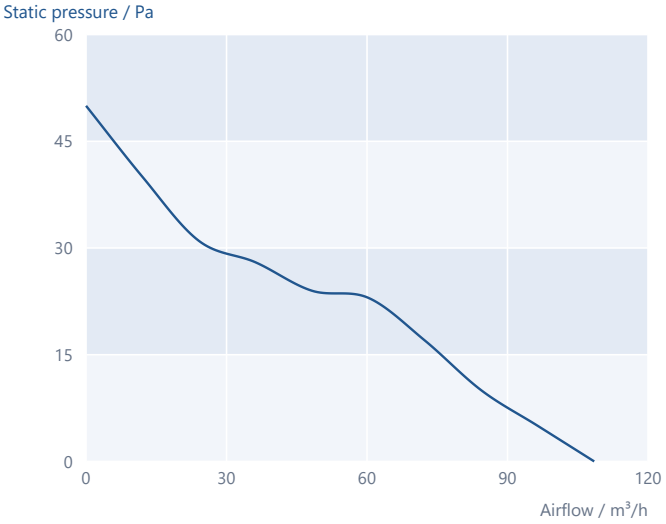

VSBF 125

230 V / single phase / 50 Hz

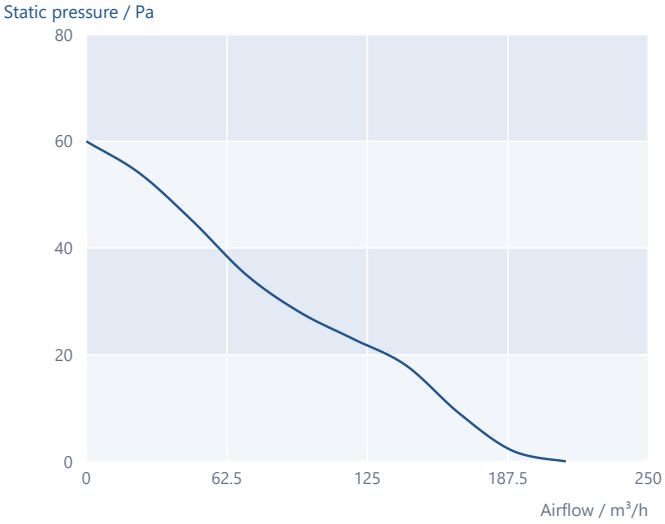

VSBF 150

230 V / single phase / 50 Hz

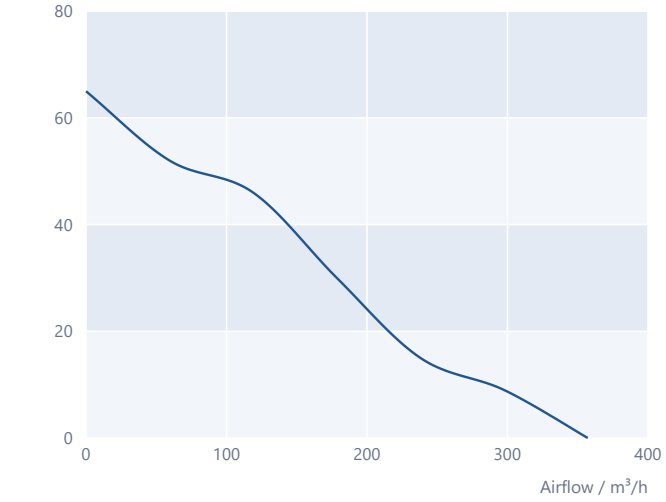

READING THE CURVES

Each model has its own chart and scale. Static pressure is shown in Pa and airflow in m³/h.

Nominal airflow and the pressure-curve endpoint are separate references. Check the technical table before selecting the operating point.

All 483 original vector-sampled points and their domains are retained. No re-fitting, speed conversion or extrapolation is applied.

Maximum airflow and maximum static pressure are separate limits; they do not describe the same operating point.

04 / DIMENSIONS

Coordinate the opening and connection.

REPRESENTATIVE SERIES OUTLINE

All dimensions in mm

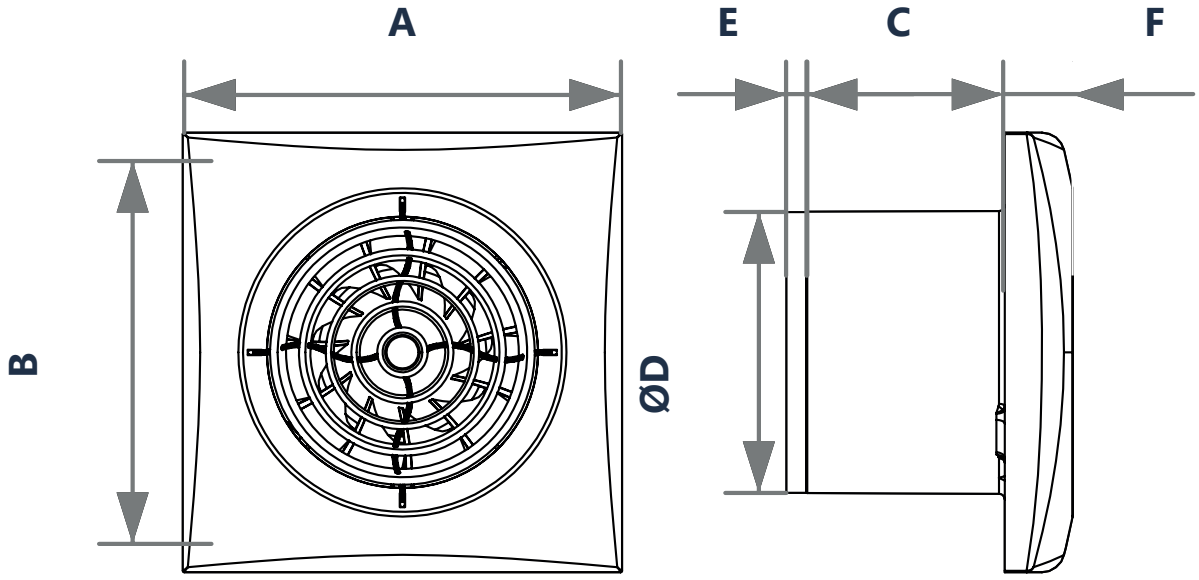

Model	A	B	C	ØD	E	F
VSBF 100	155	135	70	100	7	24
VSBF 125	175	155	78	125	8.5	24
VSBF 150	205	183	108	149	-	24

Use the row for the selected model. The outline is representative and is not drawn to scale. A and B follow the front-view callouts; C, E and F follow the side-view callouts. ØD identifies the circular connection.

VSBF 150: actual outlet ØD = 149 mm. Its E dimension is not supplied and is shown as a dash. No opening or fixing dimension is inferred from the nominal model size.

05 / INSTALLATION & ELECTRICAL

Plan access. Confirm the connection.

SUPPLY AND AVAILABLE ELECTRICAL DATA

Supply / parameter	VSBF model or available information
Supply	230 V / single phase / 50 Hz; all models
Rated input power	8.4 / 10 / 20 W; models 100 / 125 / 150
Rated current	Not supplied
Mass	Not supplied
Electrical connection diagram	Not supplied for this series

Use the supplied unit nameplate and its connection instructions for final installation. The terminal arrangement, switching options and capacitor connections are not defined by this catalogue.

WALL / WINDOW INSTALLATION

Match the selected size.

Coordinate the actual circular connection and the selected model dimensions. Keep the front grille accessible and avoid obstructing the inlet or discharge path.

INSPECTION AND CLEANING

Keep the grille clear.

Provide access for inspection and removal of dust from the protective grille. Isolate the electrical supply before cleaning and follow the instructions supplied with the unit.

Operating reference: -20 to +50 °C. Motor protection: IP25. Insulation: class F. Installation location and final electrical arrangement must follow the supplied unit instructions.

VSBF

Silent bathroom extractor fans

VOLTVENT®
VENTILATION SYSTEMS

info@voltvent.com | voltvent.com