VOLTVENT®
VENTILATION SYSTEMS



**VFD SERIES**

# Double inlet belt driven centrifugal fans

# VFD

**FORWARD-CURVED IMPELLER**

**GALVANIZED STEEL HOUSING**



| 4800-18250 | 06 | 50 Hz |
|---|---|---|
| Catalogue airflow / $m^3/h$ | Fan sizes in the range | Separate motor selection |

info@voltvent.com | voltvent.com

01 / PRODUCT OVERVIEW

# Built around your drive selection.

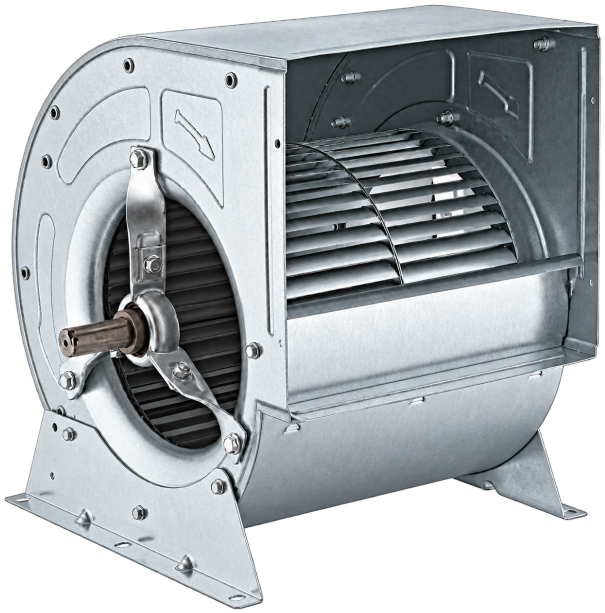

### 01 Double-inlet centrifugal design

Forward-curved galvanized-steel impeller and scroll housing for ventilation box assemblies and air-handling units.

### 02 Supported shaft assembly

Two bearings, steel supports and rubber vibration isolators support the fan shaft. Maintain access to both inlets and the transmission.

### 03 Motor supplied separately

The photograph shows the bare fan. Specify the motor, belt and pulley arrangement for the selected airflow, pressure and fan speed.

AIRFLOW, SPEED & MOTOR

# One fan size. A duty-specific drive.

Choose a fan size at the required airflow and static pressure. The pulley ratio sets fan speed within the permitted range; absorbed shaft power determines the motor recommendation. Motor shaft speed and fan speed are separate values.

| Selection parameter | Series overview |
|---|---|
| **Catalogue airflow** | 4800-18250 $m^3/h$; distinct from reference-curve limits |
| **Permitted fan speeds** | 400-2000 rpm across the range; model-specific limits |
| **Motor power limits** | 0.12-7.50 kW across the range; duty-selected |
| **Recommended motor configuration** | 400 V / 3 phase / 50 Hz / Class F / IP55 / TEFC / IE2 |
| **Motor operating range** | -20 to +60 °C |
| **Maximum transported-air temperature** | +60 °C |

Reference curves follow the published series data. Speed variants are calculated using fan affinity laws.

02 / TECHNICAL DATA

# Select the fan and the drive.

## BARE FAN / RATINGS / 50 Hz

| Model | Catalogue airflow / $m^3/h$ | Reference curve airflow / $m^3/h$ | Reference fan rpm | Permitted fan speed / rpm | Motor limits kW | Bare fan kg |
|---|---|---|---|---|---|---|
| **VFD 7-7** | 4800 | 1093-3490 | 1400 | 1000-2000 | 0.12-2.20 | 6.1 |
| **VFD 9-9** | 6000 | 2895-5420 | 1400 | 900-1600 | 0.18-2.20 | 8.2 |
| **VFD 10-10** | 8000 | 2790-6688 | 1200 | 800-1500 | 0.18-3.00 | 9.4 |
| **VFD 12-12** | 12000 | 3250-9500 | 1000 | 700-1200 | 0.25-4.00 | 15.5 |
| **VFD 15-15** | 15900 | 3680-10914 | 620 | 500-900 | 0.37-7.50 | 20.7 |
| **VFD 18-18** | 18250 | 5150-13033 | 500 | 400-700 | 0.55-5.50 | 40.5 |

Catalogue airflow is the nominal figure. The reference-curve airflow interval belongs to the stated reference fan speed; it is not the selected duty airflow or a zero-pressure rating. Keep selections within the supplied curve domain, permitted fan speed and motor power limits.

## MOTOR & DISCHARGE REFERENCES

| Model | Motor poles | Nominal discharge profile / mm | Reference motor / kW |
|---|---|---|---|
| **VFD 7-7** | 4 poles | 207 x 207 | 0.75 |
| **VFD 9-9** | 4 poles | 261 x 261 | 1.10 |
| **VFD 10-10** | 4 poles | 290 x 290 | 1.50 |
| **VFD 12-12** | 6 poles | 336 x 336 | 2.20 |
| **VFD 15-15** | 6 poles | 402 x 402 | 2.20 |
| **VFD 18-18** | 8 poles | 477 x 477 | 4.00 |

Reference motor power is a selection data configuration, not a motor included with the bare fan or a guarantee for the whole curve. FSP recommends a standard motor rating from the model-specific limits at the selected duty. Current and acoustic ratings are not supplied.

03 / AIR PERFORMANCE / 1 OF 2

# Fan Performance Curves

## VFD 7-7

Fan speed 1000-2000 rpm / 50 Hz motor supply

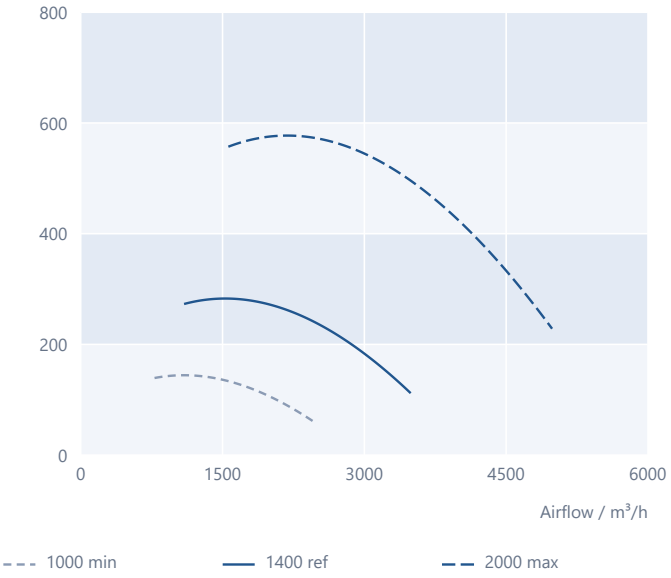


## VFD 9-9

Fan speed 900-1600 rpm / 50 Hz motor supply

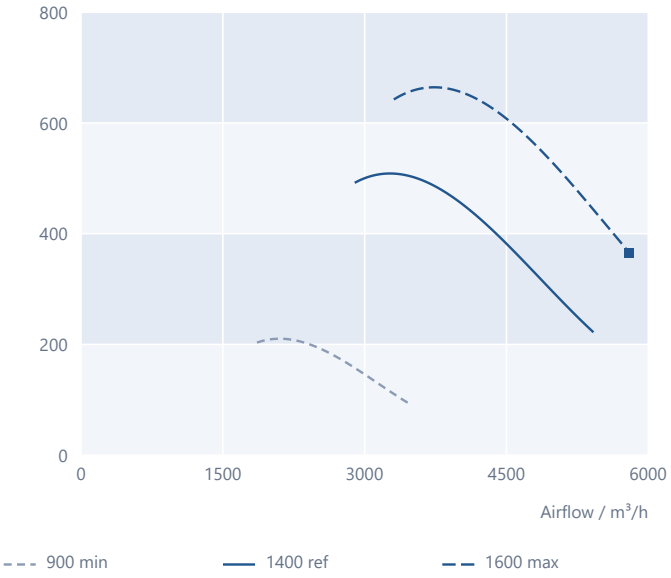


## VFD 10-10

Fan speed 800-1500 rpm / 50 Hz motor supply

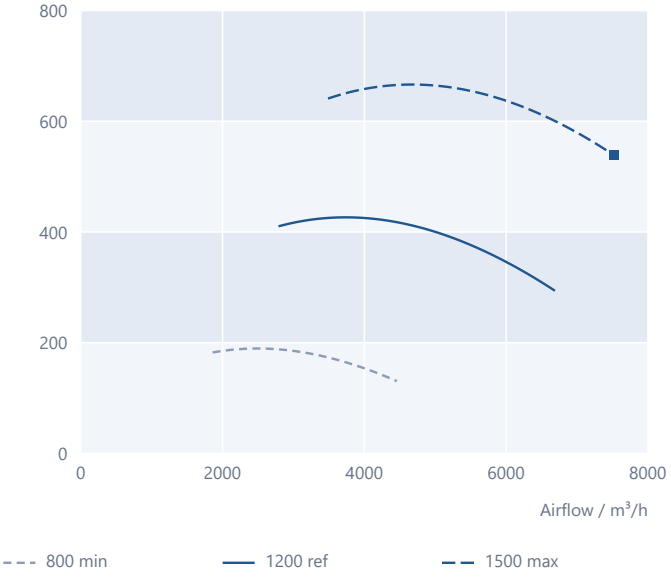


## VFD 12-12

Fan speed 700-1200 rpm / 50 Hz motor supply

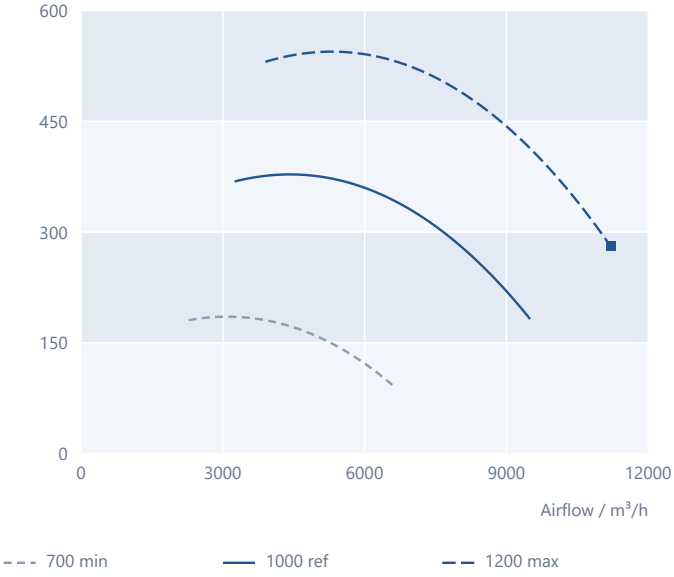


Model-specific scales. Curves stay within the supplied reference domain after speed scaling. Square endpoints mark the maximum motor-power limit; do not extrapolate beyond the plotted line. Select the final drive at the required duty in FSP.

03 / AIR PERFORMANCE / 2 OF 2

# Fan Performance Curves

## VFD 15-15

Fan speed 500-900 rpm / 50 Hz motor supply

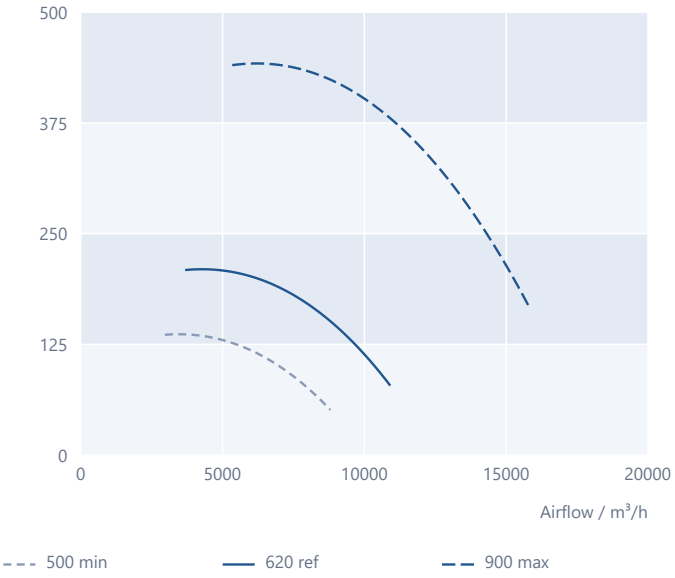


## VFD 18-18

Fan speed 400-700 rpm / 50 Hz motor supply

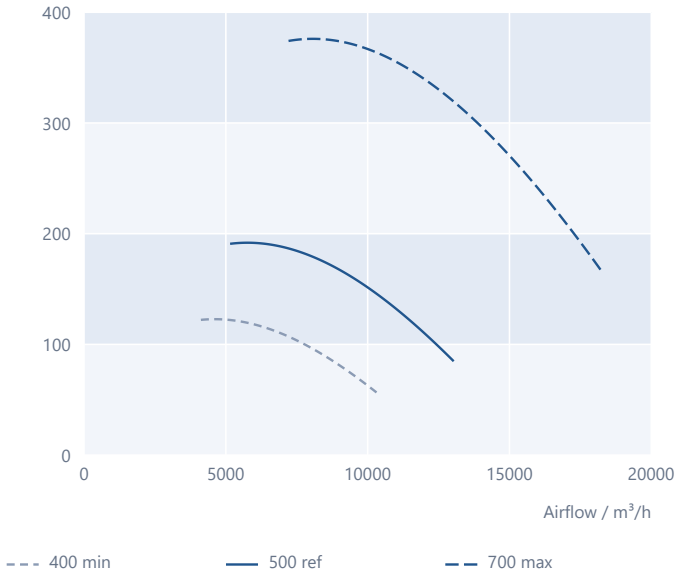


READING THE SPEED CURVES

# Match airflow, pressure and shaft power.

Each chart shows the minimum permitted speed, selection data speed and maximum permitted speed. Dashed min / max lines are affinity-scaled from the reference curve. All legends use fan rpm. The motor and pulley arrangement are selected separately.

| Change from reference speed | Affinity relationship |
|---|---|
| **Airflow** | $Q_2 = Q_1 \times (n_2 / n_1)$ |
| **Static pressure** | $p_2 = p_1 \times (n_2 / n_1)^2$ |
| **Absorbed fan shaft power** | $P_2 = P_1 \times (n_2 / n_1)^3$ |

Model-specific scales. Curves stay within the supplied reference domain after speed scaling. Square endpoints mark the maximum motor-power limit; do not extrapolate beyond the plotted line. Select the final drive at the required duty in FSP.

04 / DIMENSIONAL DRAWING

# Define the installation envelope.

## SERIES OUTLINE / SHAFT & MOUNTING DETAILS

All dimensions in mm

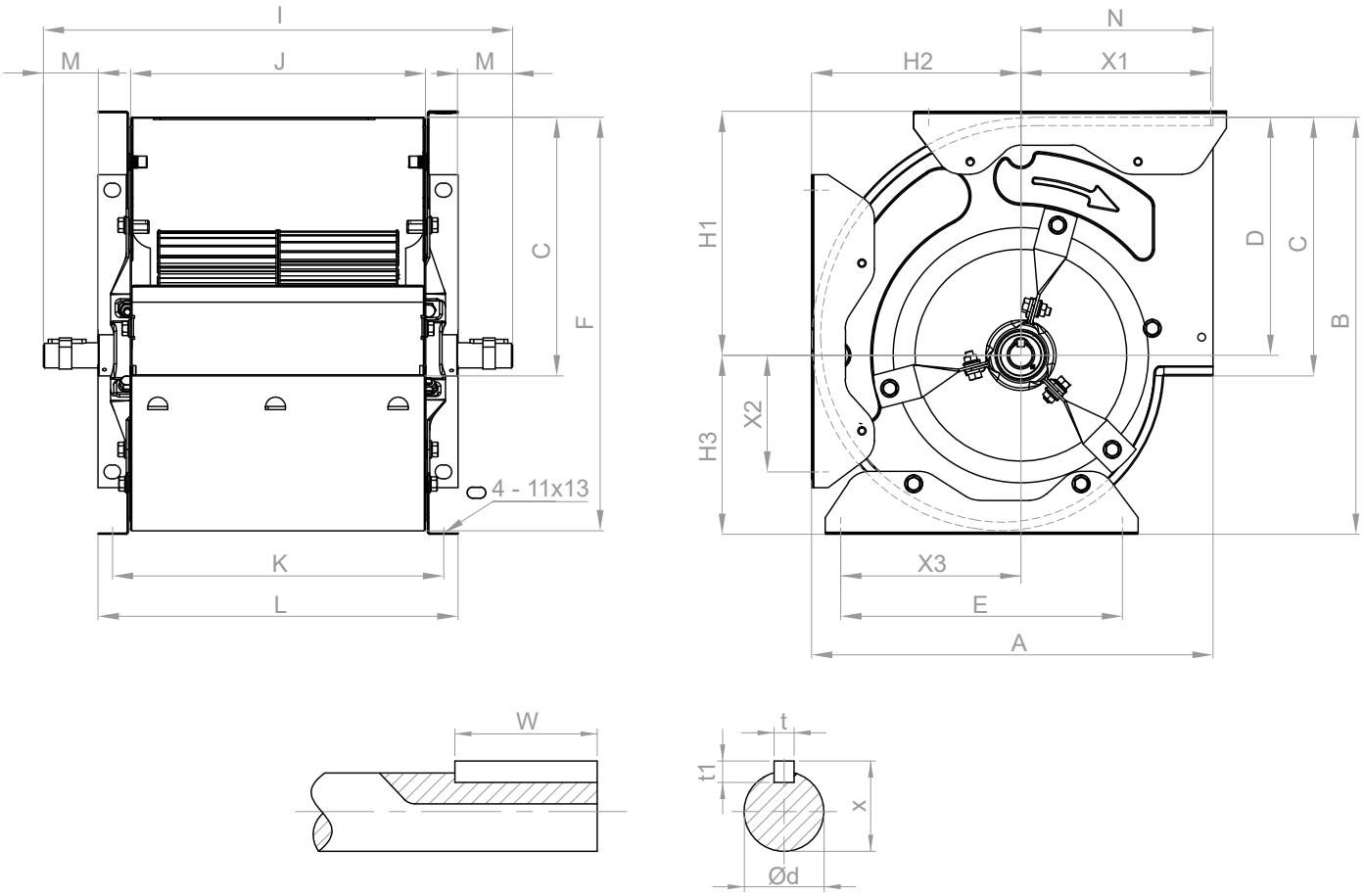


## DISCHARGE CONNECTION REFERENCES

| Model | Nominal discharge profile / mm | Drawing & dimension table |
|---|---|---|
| **VFD 7-7** | 207 x 207 | Pages 6-7 |
| **VFD 9-9** | 261 x 261 | Pages 6-7 |
| **VFD 10-10** | 290 x 290 | Pages 6-7 |
| **VFD 12-12** | 336 x 336 | Pages 6-7 |
| **VFD 15-15** | 402 x 402 | Pages 6-7 |
| **VFD 18-18** | 477 x 477 | Pages 6-7 |

The series drawing identifies 23 supplied dimension values. Use the selected model table and actual mating flange. The drawing is a dimension reference, not a scale model.

05 / DIMENSIONAL DATA

# Every mounting dimension, by size.

## HOUSING, FLANGE & HEIGHTS / mm

| Model | A | B | C | D | d | E | F | H1 | H2 | H3 | I | J |
|---|---|---|---|---|---|---|---|---|---|---|---|---|
| **VFD 7-7** | 321 | 333 | 207 | 190 | 20 | 225 | 330 | 195 | 167 | 142 | 375 | 236 |
| **VFD 9-9** | 390 | 400 | 261 | 218 | 20 | 300 | 390 | 225 | 208 | 182 | 435 | 296 |
| **VFD 10-10** | 435 | 455 | 290 | 250 | 25 | 339 | 445 | 258 | 238 | 205 | 500 | 333 |
| **VFD 12-12** | 498.5 | 535 | 336 | 292 | 25 | 409 | 630 | 304 | 270 | 243 | 580 | 398 |
| **VFD 15-15** | 597 | 620 | 402 | 341 | 25 | 497 | 610 | 349 | 324 | 279 | 650 | 476 |
| **VFD 18-18** | 687 | 753 | 477 | 411 | 25 | 605.5 | 732 | 424.5 | 375 | 342 | 754 | 559 |

## SHAFT, KEYWAY & MOUNTING DETAILS / mm

| Model | K | L | M | N | t | t1 | W | X | X1 | X2 | X3 |
|---|---|---|---|---|---|---|---|---|---|---|---|
| **VFD 7-7** | 264.5 | 287.5 | 44 | 154 | 6 | 6 | 30 | 22.5 | 152 | 93 | 144 |
| **VFD 9-9** | 325.5 | 350.5 | 44 | 217 | 6 | 6 | 30 | 22.5 | 202 | 114 | 184 |
| **VFD 10-10** | 361 | 386 | 57 | 197 | 8 | 7 | 50 | 28 | 161 | 146 | 200 |
| **VFD 12-12** | 428 | 453 | 65 | 229 | 8 | 7 | 50 | 28 | 223 | 139 | 257 |
| **VFD 15-15** | 505 | 531 | 60 | 264 | 8 | 7 | 60 | 28 | 260 | 214 | 301 |
| **VFD 18-18** | 591 | 614 | 71 | 313 | 8 | 7 | 65 | 28 | 282 | 281 | 330 |

All values are current FSP listed dimensions. X corresponds to the x keyway dimension on the drawing. VFD 12-12: F = 630 mm in FSP; the separate dimension record shows 520 mm. Confirm F against the supplied unit before finalising the mounting frame.

06 / DRIVE & INSTALLATION

# Complete the fan assembly.

## 01 Set the operating point

Specify airflow and static pressure, then select a fan size within the supplied curve domain. FSP determines the fan/system operating point and scales the reference performance to the permitted fan speed.

## 02 Choose the motor and pulley ratio

Select the motor rating within the model power limits from absorbed shaft power at duty. The available data applies no additional motor reserve. Confirm the drive design and application allowance. Size the pulleys to deliver the selected fan rpm; motor poles do not identify fan rpm.

## 03 Keep both inlets clear

Mount the fan on a rigid support using the listed dimensions. Provide clearance at both suction openings and access for the bearings and belt drive. The fan includes steel supports and rubber vibration isolators; the photograph illustrates the bare assembly.

## 04 Commission and maintain

Follow the marked direction of rotation. Guard the inlets and moving transmission as required by the installation. Isolate the supply before servicing; inspect belt tension, pulley alignment and bearing condition. Maximum transported air: +60 °C.

### SEPARATE MOTOR CONFIGURATION

Selection data: 400 V / 3 phase / 50 Hz; Class F, IP55, TEFC, IE2; motor operating range -20 to +60 °C. The actual motor nameplate and supplied connection diagram govern the installed assembly.

07 / ELECTRICAL CONNECTION

# Connect the selected motor.

THREE PHASE / LAYOUT 19 / 50 Hz

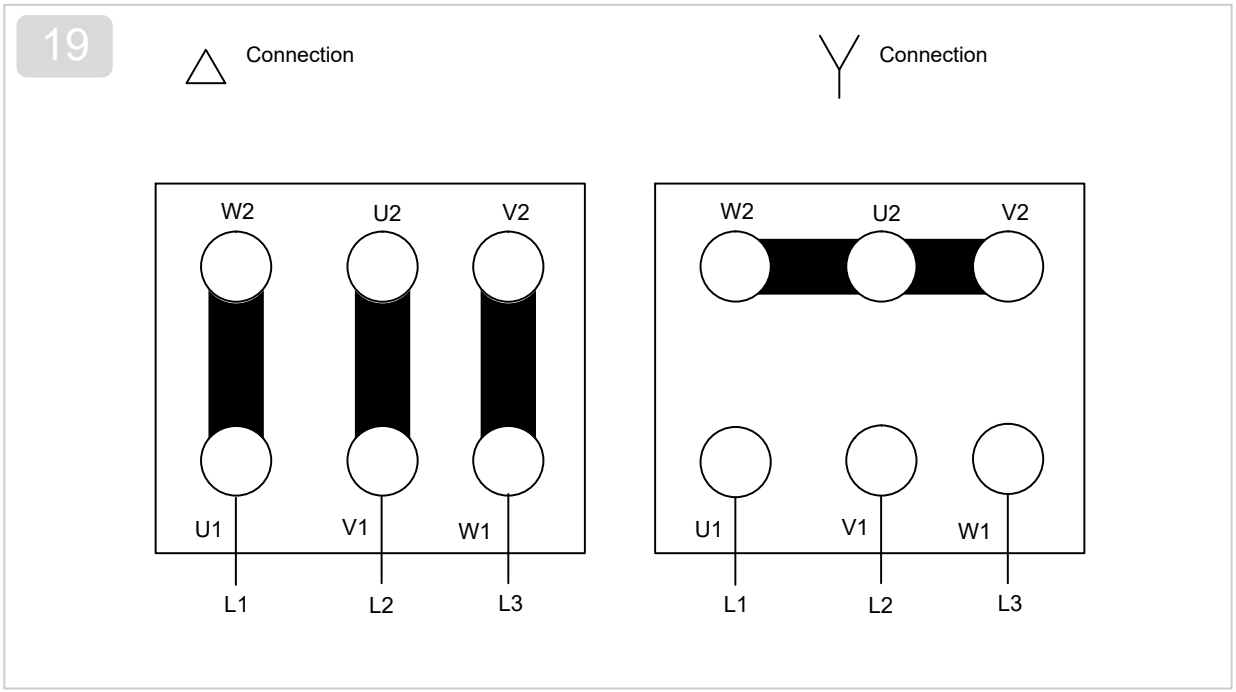


**Delta connection** **Star connection**

# The motor nameplate sets the connection.

The diagram shows delta and star terminal arrangements for the recommended three-phase motor configuration. Rated supply is 400 V, 50 Hz. The bare VFD fan is supplied without a motor; choose the correct motor voltage rating and terminal arrangement for the specified drive.

The drawing is a motor-terminal reference, not a complete control-panel or protective-device design. Use the selected motor nameplate and supplied diagram; connect protective earth and verify rotation during commissioning.

The graph caption mentions 230 V, while rated metadata specify three-phase 400 V. This catalogue follows the rated metadata. Motor current, electrical losses and application-specific control wiring are not supplied.

# VFD

## Double inlet belt driven centrifugal fans

