VHF SERIES

Horizontal discharge centrifugal roof fans

VHF

BACKWARD-CURVED IMPELLER

HORIZONTAL DISCHARGE

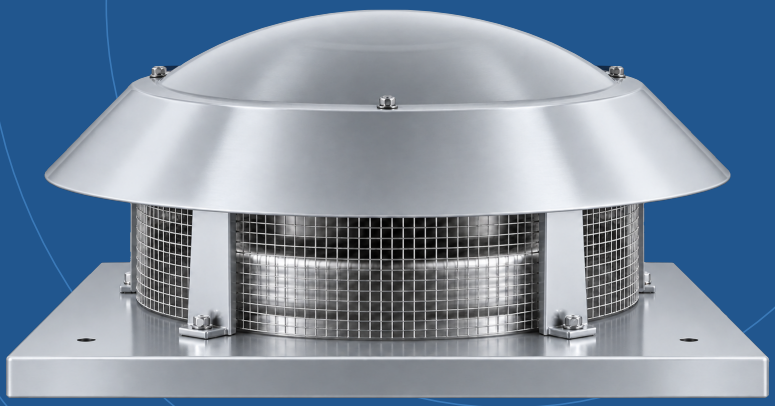

346-9600
Nominal airflow / m^3/h

10
Models in the range

50 Hz
Single / three phase

info@voltvent.com | voltvent.com

01 / PRODUCT OVERVIEW

Roof extraction. Horizontal discharge.

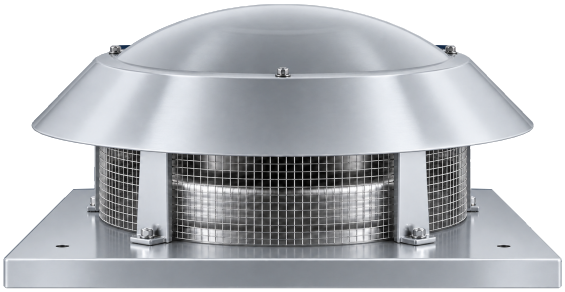

01 Weather cover and roof mounting

A sheet-metal cover and mounting plate form the roof installation. The outlet grille and structural supports are illustrated by the approved product photograph.

02 Backward-curved centrifugal wheel

The construction uses a galvanized backward-curved impeller and enclosed external-rotor motor for roof extraction.

03 Select against the system resistance

Ten 50 Hz models cover nominal airflow from 346 to 9600 m^3/h. Use each listed static-pressure curve to match the connected duct resistance.

MODEL-SPECIFIC RATINGS

One series. Ten configurations.

Selection parameter	Series overview
Nominal airflow	346-9600 m^3/h
Nominal motor power	60-1750 W
Electrical supply	230 V / 1 phase or 400 V / 3 phase / 50 Hz
Motor configuration	2 or 4 poles / Class B or F / IP44 or IP54
Motor range / maximum transported air	-20 to +40 °C / +40 °C
Sound pressure reference	Listed LpA at 4 m; model-specific

Published series data. Use the selected model outline and motor nameplate. The photograph is illustrative of the series configuration.

02 / TECHNICAL DATA

Compare the fan and motor.

10 MODELS / 50 Hz / NOMINAL RATINGS

Model	Supply V / phase	Airflow m^3/h	Max. Ps Pa	Motor W	Speed rpm	Current A	Weight kg	LpA / 4 m dB(A)
VHF 160	230 / 1	346	225	60	2600	0.3	3.5	44
VHF 180	230 / 1	460	290	80	2500	0.35	3.7	49
VHF 225	230 / 1	902	450	130	2750	0.6	7	50
VHF 250	230 / 1	1212	545	190	2800	0.85	8	52
VHF 315	230 / 1	2000	270	160	1450	0.8	12.8	47
VHF 355	230 / 1	2900	320	240	1400	1.1	18	46
VHF 400	230 / 1	4100	540	380	1380	1.65	22	51
VHF 450	230 / 1	5400	540	620	1370	2.8	28	52
VHF 500	400 / 3	7600	720	1200	1400	2.7	45.5	54
VHF 560	400 / 3	9600	880	1750	1400	3.3	48	66

Airflow and maximum static pressure are nominal ratings, not a selected duty point. Motor power, speed and current are nominal values; operating-point values in FSP may differ.

MOTOR & ACOUSTIC REFERENCE

VHF 160-250: 2 poles / Class B. VHF 315-560: 4 poles / Class F. All listed motors are TEAO. VHF 160-450: IP44; VHF 500 and 560: IP54. Motor class, efficiency and capacitor references are listed on page 7.

LpA is the supplied sound-pressure reference at 4 m. Inlet and housing sound-power bands are listed separately on page 8. No outlet spectrum or sound-pressure spectrum is inferred.

Motor operating range: -20 to +40 °C. Maximum transported-air temperature: +40 °C.

03 / AIR PERFORMANCE / 1 OF 2

Fan Performance Curves

VHF 160

230 V / 1 phase / 50 Hz / 60 W

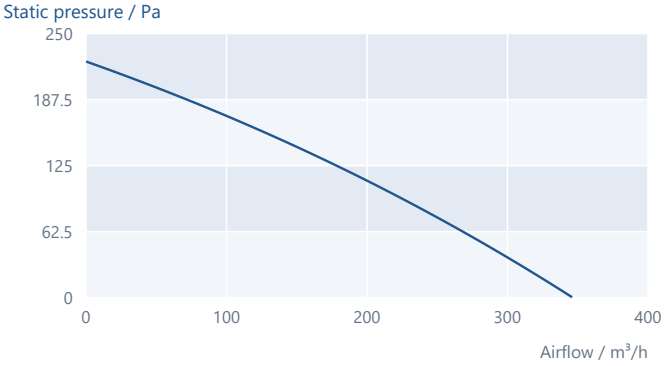

VHF 180

230 V / 1 phase / 50 Hz / 80 W

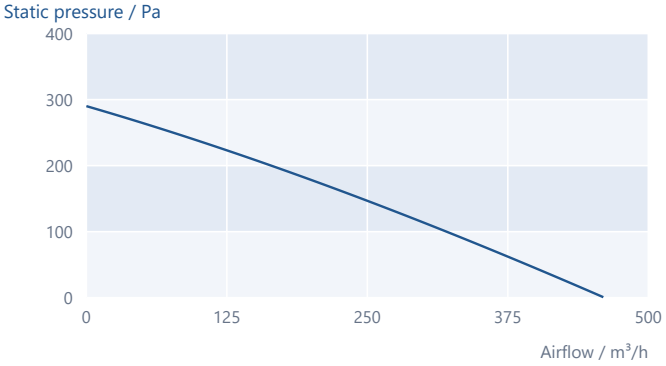

VHF 225

230 V / 1 phase / 50 Hz / 130 W

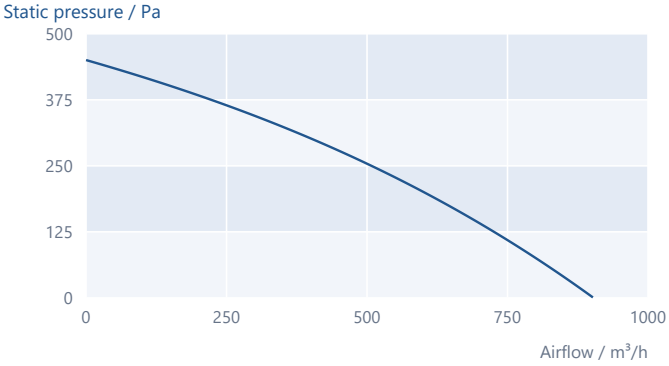

VHF 250

230 V / 1 phase / 50 Hz / 190 W

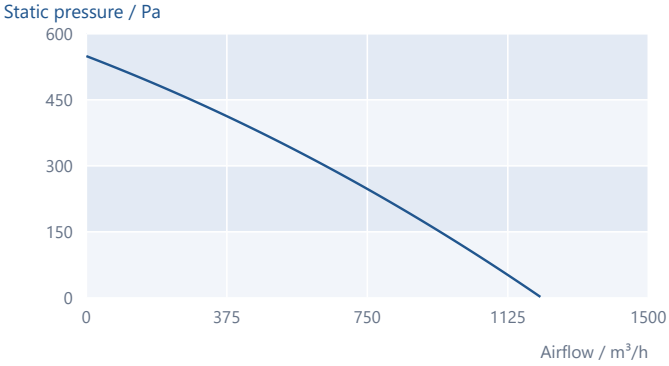

VHF 315

230 V / 1 phase / 50 Hz / 160 W

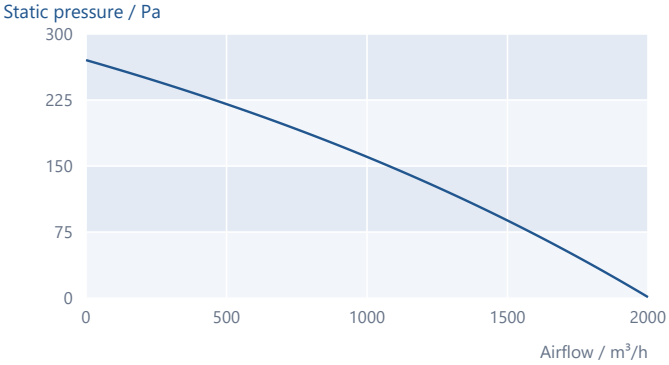

Model-specific scales. Listed 50 Hz fan curves; nominal airflow is listed separately on page 3.

03 / AIR PERFORMANCE / 2 OF 2

Fan Performance Curves

VHF 355

230 V / 1 phase / 50 Hz / 240 W

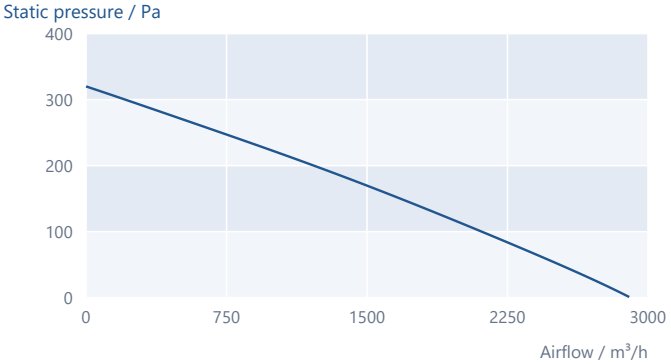

VHF 400

230 V / 1 phase / 50 Hz / 380 W

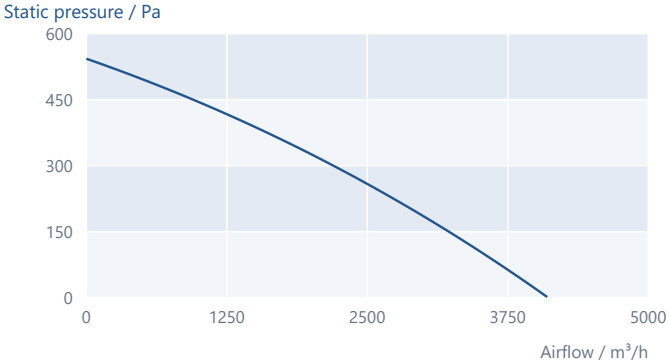

VHF 450

230 V / 1 phase / 50 Hz / 620 W

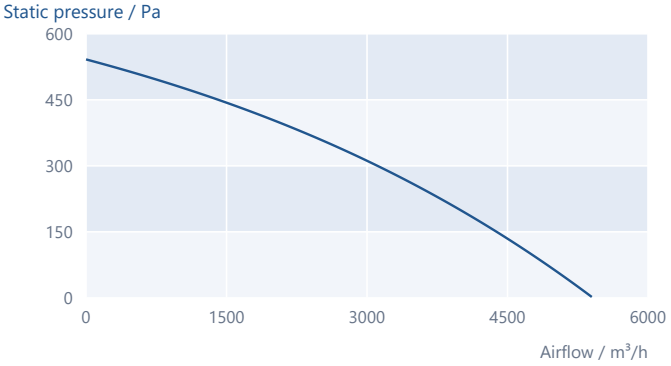

VHF 500

400 V / 3 phase / 50 Hz / 1200 W

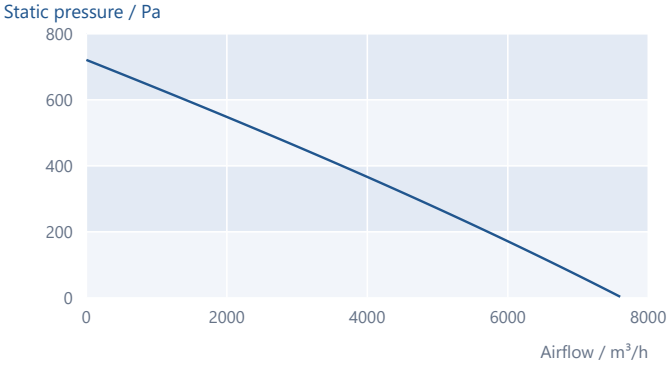

VHF 560

400 V / 3 phase / 50 Hz / 1750 W

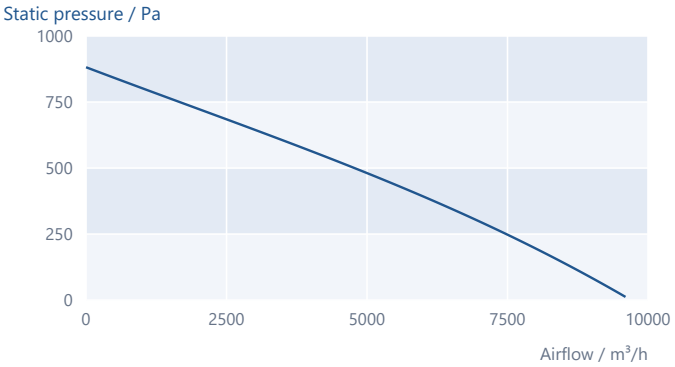

Model-specific scales. Listed 50 Hz fan curves; nominal airflow is listed separately on page 3.

04 / DIMENSIONS

Define the roof connection.

ORIGINAL FAMILY OUTLINE / FRONT & PLAN

All dimensions in mm

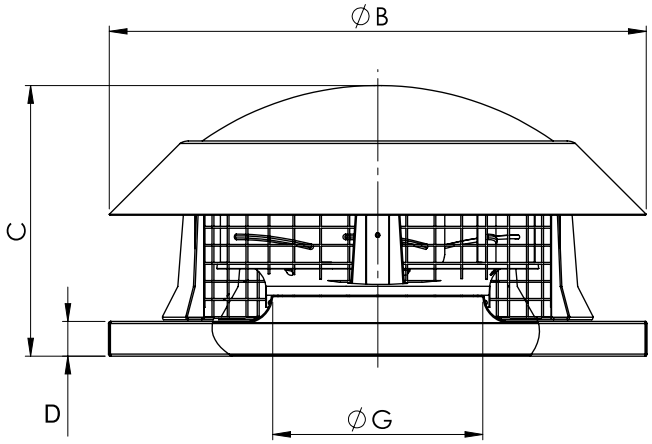

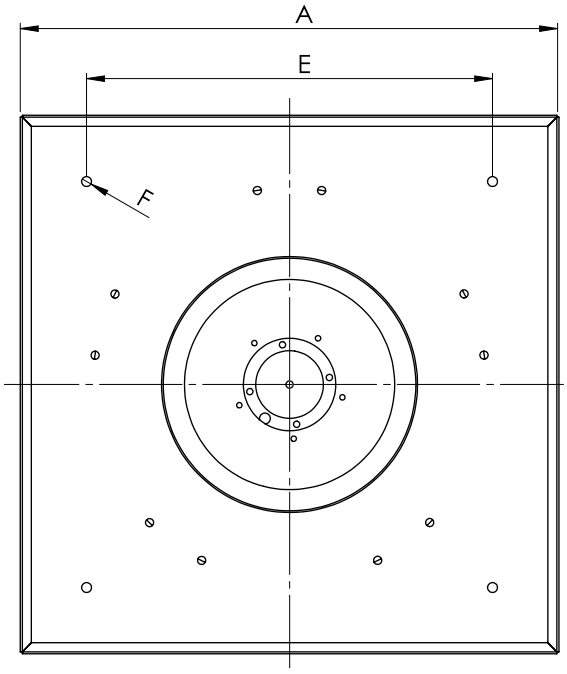

Model	A	B	C	D	E	F	G
VHF 160	252	260	140	25	210	6	99
VHF 180	252	260	140	25	210	6	99
VHF 225	336	386	212	35	274	11	144
VHF 250	370	386	225	35	290	11	162
VHF 315	454	443	293	40	333	11	198
VHF 355	595	595	285	40	450	11	234
VHF 400	595	685	355	40	450	12	268
VHF 450	664	685	400	40	450	12	303
VHF 500	798	824	385	40	600	12	342
VHF 560	798	824	400	40	600	12	380

Model codes denote size groups. The drawing defines the actual connection ØG, cover ØB, mounting plate A and fixing pattern E/F. Do not use the model suffix or FSP calculation diameter as the connection size.

05 / INSTALLATION & MOTOR

Prepare the roof and the motor.

01 Roof curb, sealing and access

Mount on a suitable rigid roof curb. Seal the roof connection and keep the horizontal discharge clear. Provide service access and secure supports. Motor range: -20 to +40 °C; maximum transported air: +40 °C.

02 Supply and speed control

Single-phase models use 230 V; three-phase models use 400 V. Use compatible voltage control for single phase or inverter control for three phase, following the actual motor/controller instructions. Isolate power before inspection.

MODEL-SPECIFIC MOTOR REFERENCES / TEAO

Model	Poles	Class	IP	Motor IE class	Capacitor µF	Capacitor rating / V	Layout
VHF 160	2	B	IP44	IE1	2	400	01
VHF 180	2	B	IP44	IE1	2.5	400	01
VHF 225	2	B	IP44	IE1	3	400	01
VHF 250	2	B	IP44	IE1	6	400	01
VHF 315	4	F	IP44	IE1	6	400	01
VHF 355	4	F	IP44	Unverified*	6	400	01
VHF 400	4	F	IP44	IE1	10	400	03
VHF 450	4	F	IP44	IE1	10	400	03
VHF 500	4	F	IP54	IE1	-	-	22
VHF 560	4	F	IP54	IE1	-	-	22

* VHF 355: the raw efficiency field is numeric 2 and does not explicitly identify an IE class; no IE2 claim is inferred. Capacitor voltage is the component rating, not the supply voltage. Use the selected motor diagram on pages 9-10.

06 / ACOUSTIC REFERENCE

Sound power, by model.

INLET & HOUSING BAND LEVELS / dB

Model	Listed	65 Hz	125 Hz	250 Hz	500 Hz	1 kHz	2 kHz	4 kHz	8 kHz	LwA dB(A)
VHF 160	Inlet	40	58	62	64	63	60	55	48	69
VHF 160	Housing	41	59	63	65	64	61	56	49	70
VHF 180	Inlet	43	61	65	67	66	63	58	51	72
VHF 180	Housing	44	62	66	68	67	64	59	52	73
VHF 225	Inlet	46	64	68	70	69	66	61	54	75
VHF 225	Housing	47	63	69	71	70	67	62	55	76
VHF 250	Inlet	48	66	70	72	71	68	63	56	77
VHF 250	Housing	49	65	71	73	72	69	64	57	78
VHF 315	Inlet	59	61	65	67	66	63	58	51	72
VHF 315	Housing	61	63	67	69	68	65	60	53	74
VHF 355	Inlet	58	60	64	66	65	62	57	50	71
VHF 355	Housing	60	62	66	68	67	64	59	52	73
VHF 400	Inlet	46	65	73	68	74	61	57	54	78
VHF 400	Housing	50	70	69	73	71	64	59	55	77
VHF 450	Inlet	45	60	67	66	63	61	56	57	72
VHF 450	Housing	47	66	68	72	71	66	61	59	77
VHF 500	Inlet	48	62	72	70	66	63	58	56	75
VHF 500	Housing	46	64	68	73	70	68	61	57	77
VHF 560	Inlet	58	74	78	80	79	75	70	63	85
VHF 560	Housing	58	75	79	81	82	78	72	65	87

Inlet and housing sound-power bands and totals are supplied selection datas. The original first band is labelled 65 Hz and is retained. Blank outlet spectra and placeholder totals are excluded.

Listed LpA is independently supplied at 4 m in the technical table on page 3. No sound-pressure spectrum, installation correction or conversion between LwA and LpA is inferred.

07 / ELECTRICAL CONNECTION / SINGLE PHASE

Match the single-phase motor.

VHF 160 / 180 / 225 / 250 / 315 / 355

Layout 01 / 230 V / 50 Hz

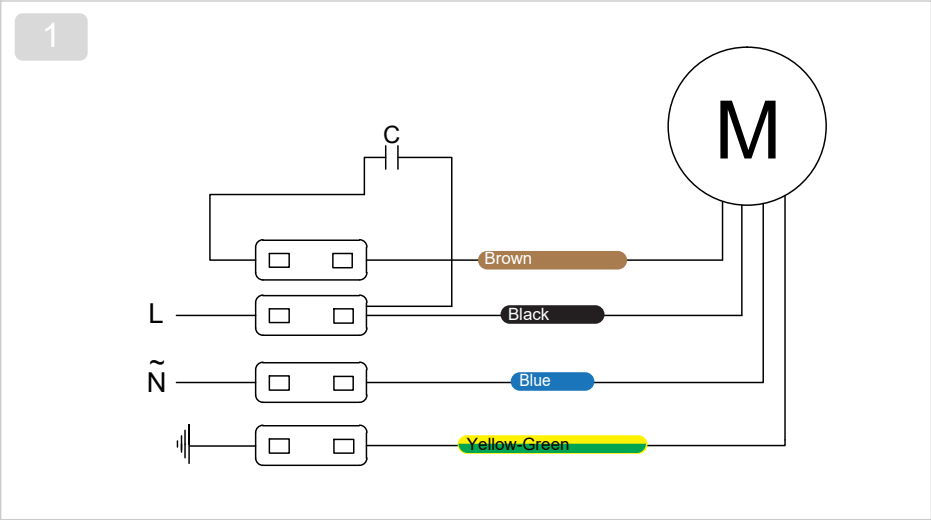

VHF 400 / 450

Layout 03 / 230 V / 50 Hz

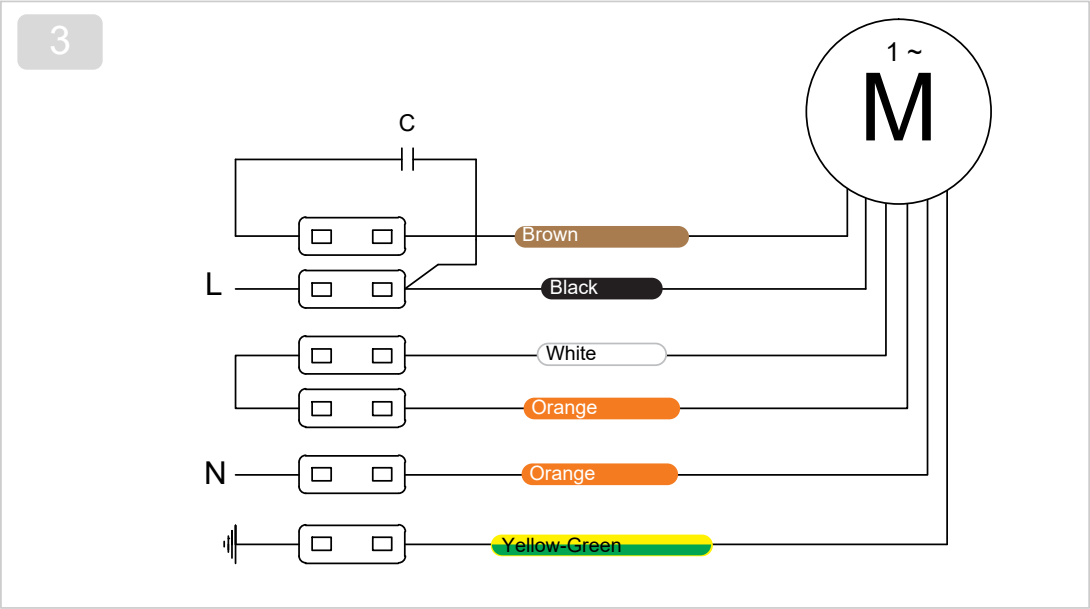

The diagrams retain conductor colours, capacitor connections, protective earth and any thermal-protection terminals shown. Use the selected motor nameplate, supplied diagram and capacitor rating.

Diagram selection follows each current FSP model record. These are motor connection references, not complete application control-panel designs.

08 / ELECTRICAL CONNECTION / THREE PHASE

Match the three-phase motor.

VHF 500 / 560

Layout 22 / 400 V / 50 Hz

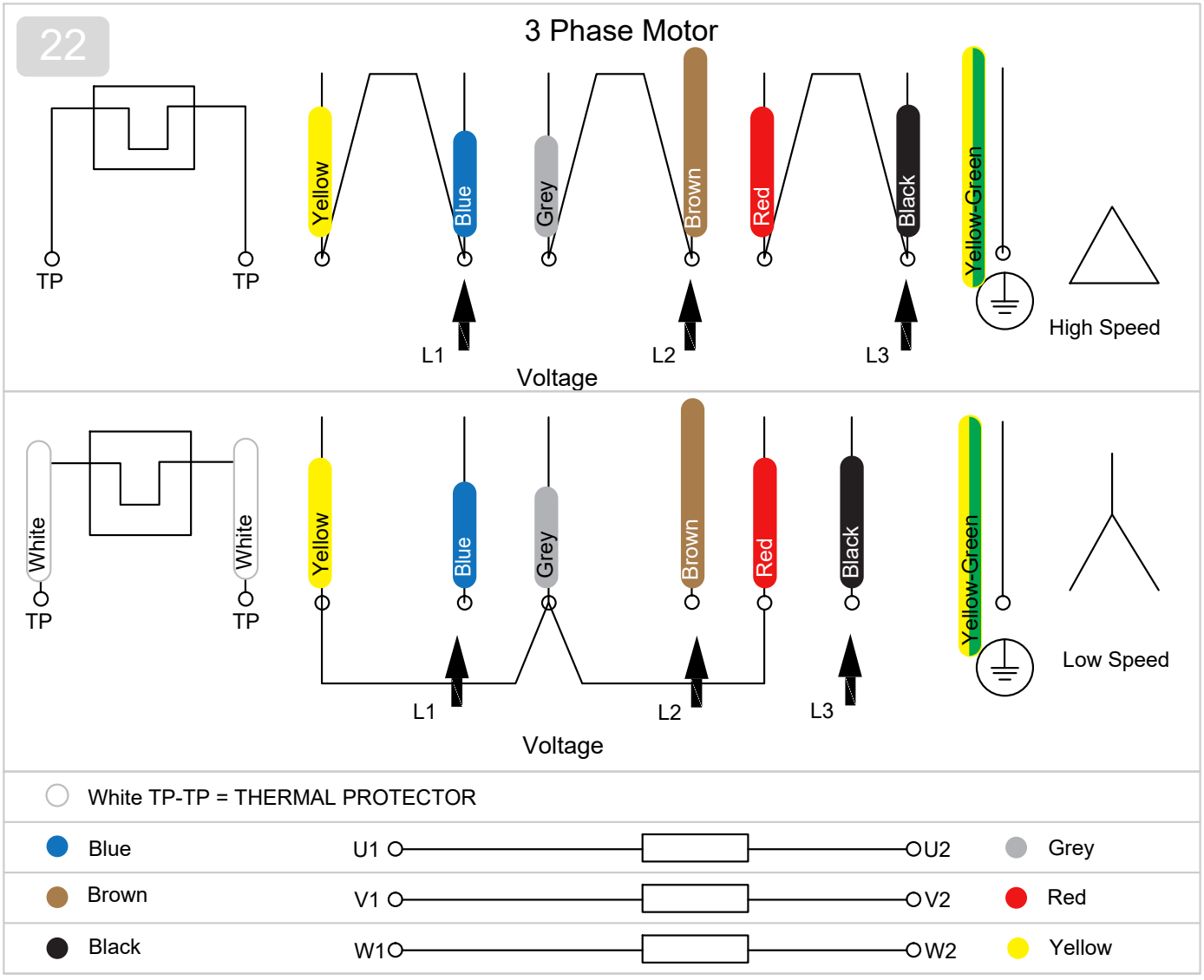

Layout 22 provides the terminal and conductor-colour arrangements for the listed three-phase motors. The selected motor nameplate and supplied connection diagram determine the applicable arrangement.

Connect protective earth, check rotation and specify motor protection for the actual unit. Do not bridge thermal-protection terminals as power conductors.

VHF

Horizontal discharge centrifugal roof fans

VOLTVENT®
VENTILATION SYSTEMS

info@voltvent.com | voltvent.com