VOLTVENT®
VENTILATION SYSTEMS

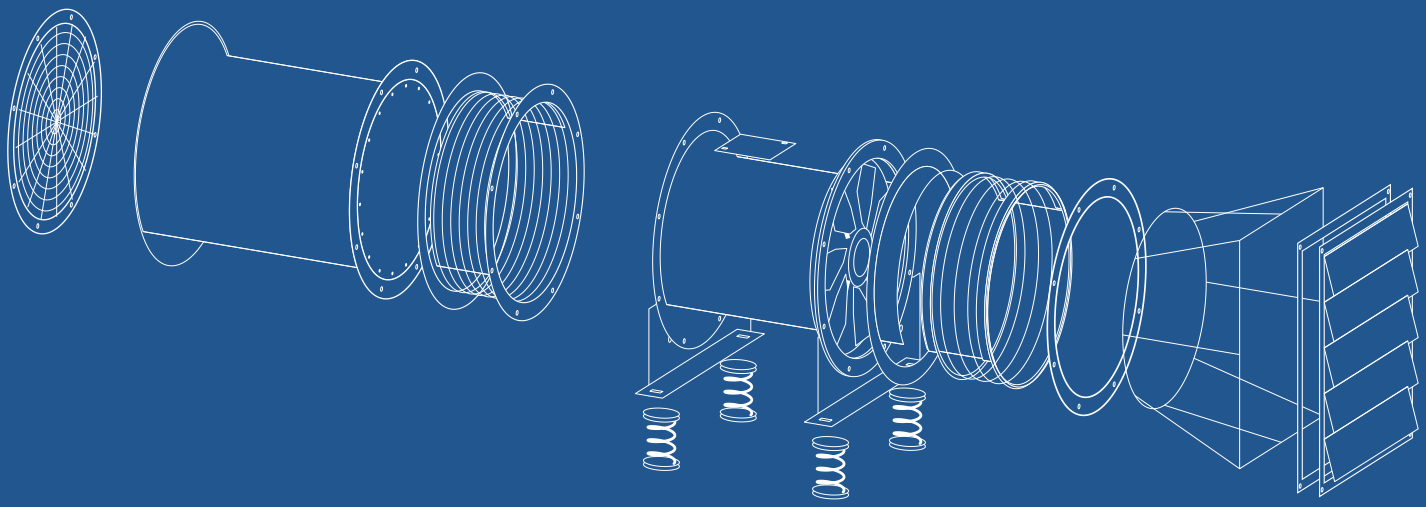

# ACCESSORIES

## GENERAL CATALOGUE

go green, breathe clean !

Turkey
Discover
the potential

www.voltvent.com

**VENTILATION ACCESSORIES**

# Coordinate the complete assembly.

Connection, air control, acoustic treatment, room air distribution, motor control and electric heating.

## Define the interfaces.

Identify the duct shape and nominal size, mating flanges, room function and the required method of operation. Check the accessory and its neighbouring components together.

## Select for the duty.

Coordinate airflow, resistance, acoustic targets, air distribution, control inputs and electrical supply with the selected product. A nominal size or model code alone does not define the complete duty.

## Plan installation and service.

Provide the required support, access, wiring and maintenance arrangements. Installation illustrations explain interface principles; the fan shown is an application example, not an exclusive compatibility list.

Confirm the final dimensions and mechanical/electrical details for the offered assembly. Product-specific installation and service documents are available through Voltvent product pages.

VOLTVENT®
VENTILATION SYSTEMS

EXPLORE THE RANGE

# Contents


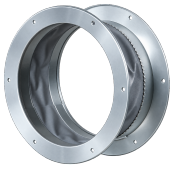

01

## Fan Connections & Mounting Equipment

004

005-026



02

## Dampers

027

028-047

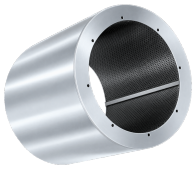

03

## Silencers

048

049-058



04

## Grilles & Diffusers

059

060-083



05

## Controls

084

085-092



06

## Electric Duct Heaters

093

094-103

VOLTVENT®
VENTILATION SYSTEMS

01 / VENTILATION ACCESSORIES

# Fan Connections & Mounting Equipment

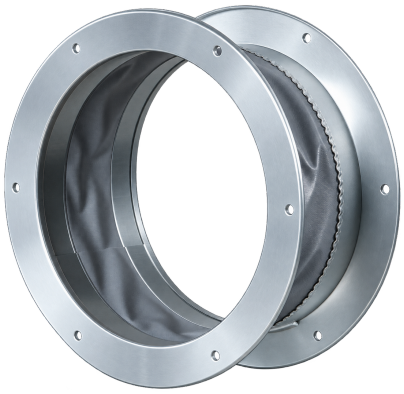

VCON



VVIS

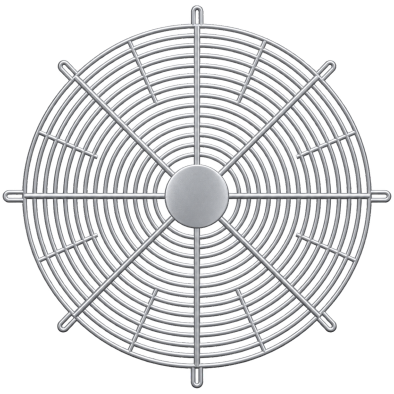

VGG

Connect and support the air path.

VMAV / VVIS / VCOF / VGG / VCON / VCON-FX-C / VCON-FX-R / VAXS / VBDD-MCH-R

01 / PRODUCT INDEX

# Nine accessories. One catalogue.

Technical schedules and installation views for mounting, connections, silencing and backdraft control.



**VMAV**
Mounting Feet
007 / DATA
008 / APPLICATION



**VVIS**
Vibration Isolator
009 / DATA
010 / APPLICATION



**VCOF**
Counter Flange
011 / DATA
012 / APPLICATION



**VGG**
Inlet/Outlet Grille Guard
013 / DATA
014 / APPLICATION



**VCON**
Connector
015 / DATA
016 / APPLICATION



**VCON-FX-C**
Circular Flexible Connector
017 / DATA
018 / APPLICATION



**VCON-FX-R**
Rectangular Flexible Connector
019 / DATA
020 / APPLICATION

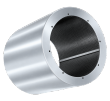

**VAXS**
Silencer
021 / DATA
022 / APPLICATION



**VBDD-MCH-R**
Rectangular Back Draft Damper
023 / DATA
024 / APPLICATION

Nominal size guidance
**006**

Assembly coordination
**025**

Project release
**026**

02 / READING THE SCHEDULES

# Define the size. Confirm the interface.

Application views illustrate connection principles, not exclusive model compatibility. Nominal schedules list sizes and selection entries by accessory.

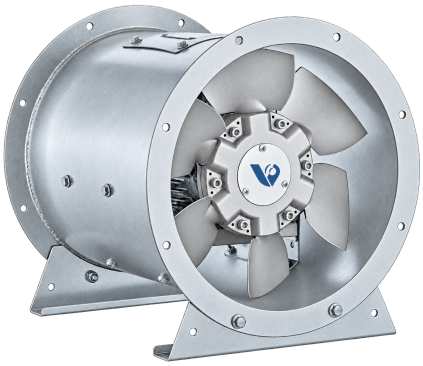

Axial fan installation examples

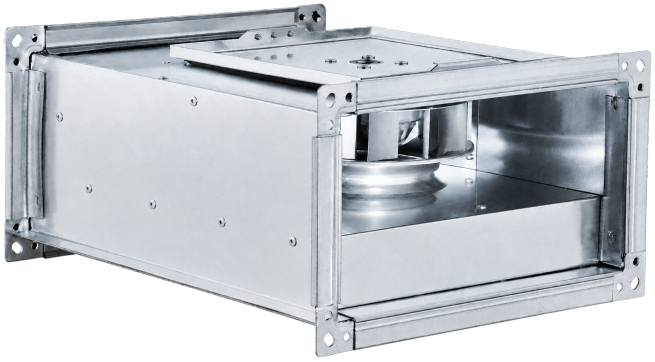

Rectangular connection example

### 1 Associated fan size

VMAV and VVIS are listed against the fan nominal size. This is not a foot or spring manufacturing dimension.

### 2 Connection size

Other tables list nominal circular Ø or rectangular W/H. Overall flange and fixing dimensions require a drawing.

## A complete assembly needs its own drawing.

Confirm the mating pattern, joint length, support details, service access and operating conditions. Application views identify component positions and interfaces; they are not scaled manufacturing drawings.

VMAV / TECHNICAL DATA

# VMAV

Mounting Feet



Mounting feet for supporting the selected axial fan assembly.

Coordinate the mounting position with the fan casing, support structure and access requirements.

| Code | Associated fan nominal size / mm |
|---|---|
| **VMAV** | 400 |
| **VMAV** | 450 |
| **VMAV** | 500 |
| **VMAV** | 560 |
| **VMAV** | 630 |
| **VMAV** | 710 |
| **VMAV** | 800 |
| **VMAV** | 900 |
| **VMAV** | 1,000 |
| **VMAV** | 1,250 |

The listed sizes identify the associated fan nominal size. Foot width, height, plate thickness and fixing-hole details require the selected assembly drawing.

VMAV / INSTALLATION EXAMPLE

# Support the fan at its flange stations.

Illustrative arrangement only. Other compatible fan models may be used after connection and duty checks.

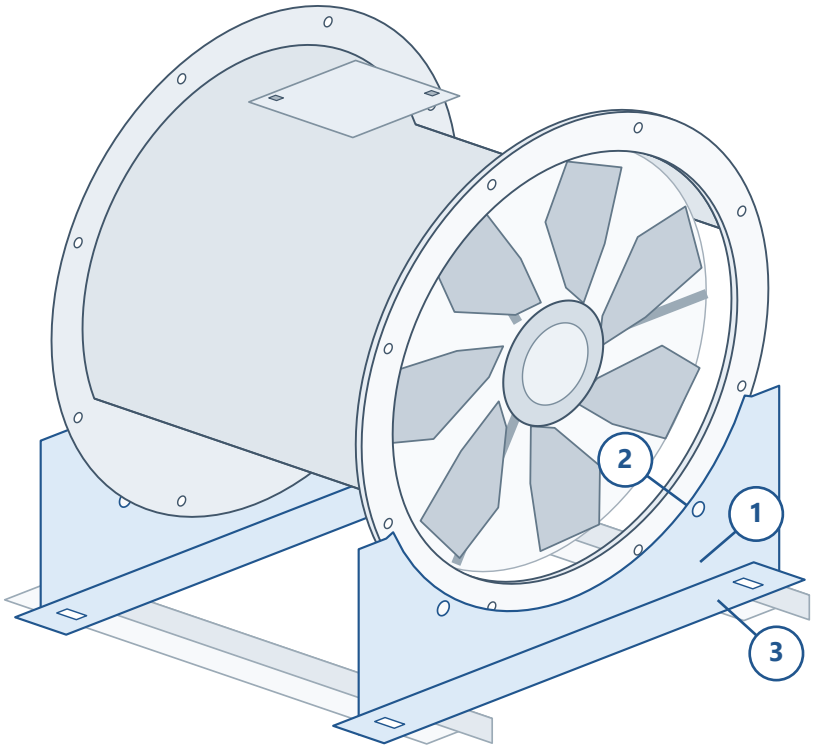


### 01 / Mounting foot

The concave foot is shown seated at the casing end-flange station.

### 02 / Fan interface

Match the fixing points to the selected fan casing/flange.

### 03 / Support interface

Coordinate the support surface and fixing design for the installed fan.

Illustrative arrangement, not to scale. Final interface pattern, fixing details, dimensions and installation requirements follow the selected fan/accessory drawing.

VVIS / TECHNICAL DATA

# VVIS

Vibration Isolator



Vibration isolators for the fan and its supporting structure.

Used at the support points to help limit the transmission of vibration to the building structure.

| Code | Associated fan nominal size / mm |
|---|---|
| **VVIS** | 400 |
| **VVIS** | 450 |
| **VVIS** | 500 |
| **VVIS** | 560 |
| **VVIS** | 630 |
| **VVIS** | 710 |
| **VVIS** | 800 |
| **VVIS** | 900 |
| **VVIS** | 1,000 |
| **VVIS** | 1,250 |

The listed sizes identify the associated fan nominal size. Spring load, deflection, quantity and fixing arrangement are selected for the complete assembly.

VVIS / INSTALLATION EXAMPLE

# Show the complete support load path.

Illustrative arrangement only. Other compatible fan models may be used after connection and duty checks.

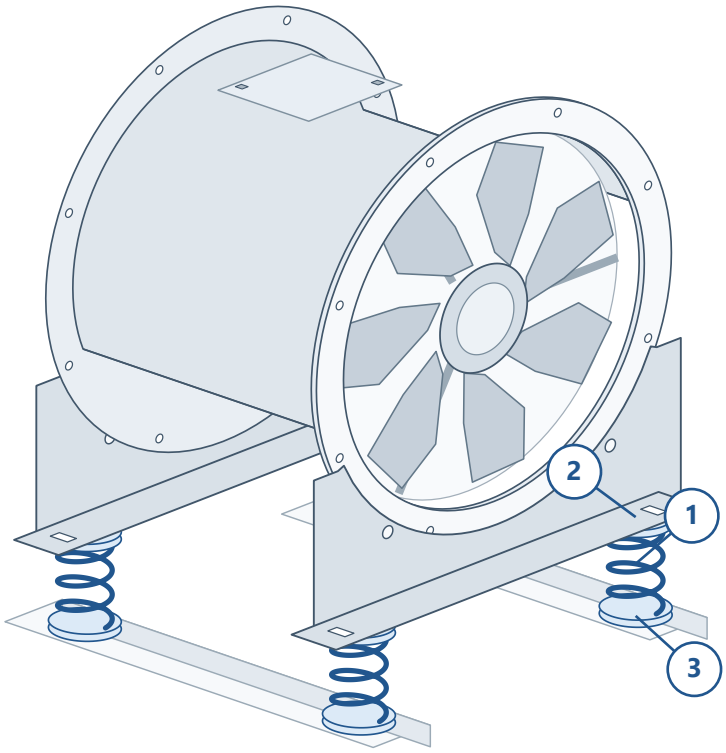


### 01 / Spring isolator

The spring is shown between a mounting foot and the support rail.

### 02 / Load path

Connect the fan and foot to the selected isolator top plate.

### 03 / Structure

Coordinate the lower fixing and the load carried by each support point.

Illustrated support layout. Select the isolator quantity, load and deflection for the actual fan assembly; the view does not specify a universal four-spring kit.

VCOF / TECHNICAL DATA

# VCOF

Counter Flange



A counter flange for the mating connection of an axial fan installation.

Provides the matching connection interface between the fan flange and the adjoining installation.

| Code | Nominal connection Ø / mm |
|---|---|
| **VCOF** | 400 |
| **VCOF** | 450 |
| **VCOF** | 500 |
| **VCOF** | 560 |
| **VCOF** | 630 |
| **VCOF** | 710 |
| **VCOF** | 800 |
| **VCOF** | 900 |
| **VCOF** | 1,000 |
| **VCOF** | 1,250 |

The nominal connection size does not define flange outside diameter, thickness, bolt circle or hole pattern. Confirm the mating flange drawing.

VCOF / INSTALLATION EXAMPLE

# Match the mating flange.

Illustrative arrangement only. Other compatible fan models may be used after connection and duty checks.

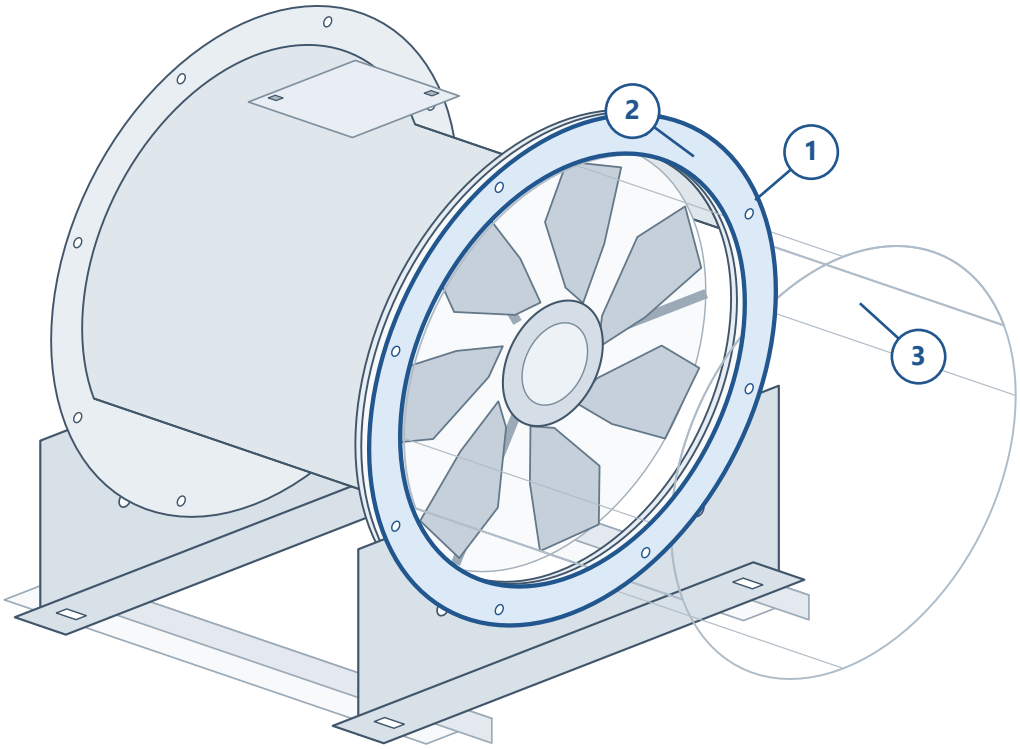


### 01 / Counter flange

The highlighted ring forms the mating flange at the fan connection.

### 02 / Fan flange

Verify the bolt pattern, sealing arrangement and fixing detail.

### 03 / Adjoining duct

Coordinate the duct flange and independent support for the installation.

Illustrative arrangement, not to scale. Final interface pattern, fixing details, dimensions and installation requirements follow the selected fan/accessory drawing.

VGG / TECHNICAL DATA

# VGG

Inlet/Outlet Grille Guard

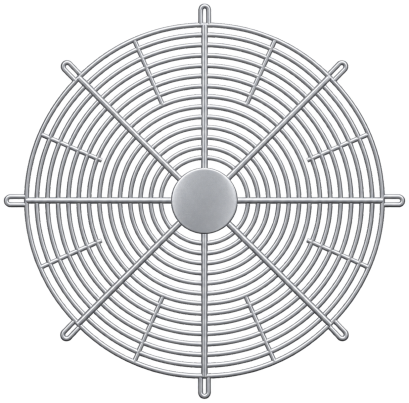

An inlet or outlet guard for the selected axial fan arrangement.

A grille guard at an exposed fan opening helps restrict access to the rotating assembly.

| Code | Nominal connection Ø / mm |
|---|---|
| **VGG** | 400 |
| **VGG** | 450 |
| **VGG** | 500 |
| **VGG** | 560 |
| **VGG** | 630 |
| **VGG** | 710 |
| **VGG** | 800 |
| **VGG** | 900 |
| **VGG** | 1,000 |
| **VGG** | 1,250 |

Verify the guard-to-flange interface, required guarding clearances and access for maintenance. Aperture and wire details are not specified by the nominal size list.

VGG / INSTALLATION EXAMPLE

# Guard the exposed fan opening.

Illustrative arrangement only. Other compatible fan models may be used after connection and duty checks.

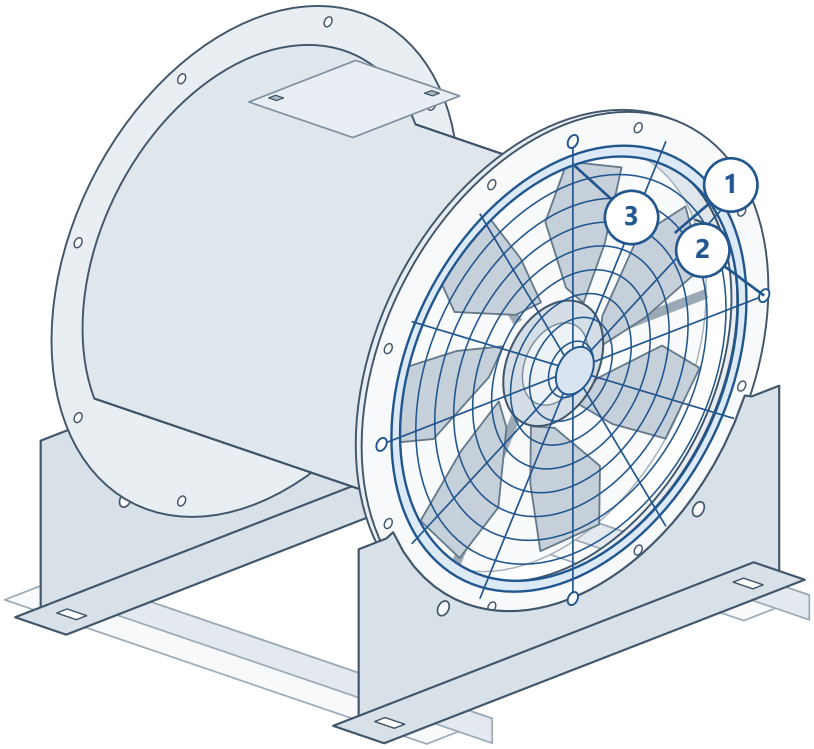


### 01 / Grille guard

The guard is shown across an exposed fan opening.

### 02 / Fixing interface

Match the perimeter attachment to the selected fan flange.

### 03 / Guarding space

Confirm separation, access and the required guarding arrangement.

Illustrative arrangement, not to scale. Final interface pattern, fixing details, dimensions and installation requirements follow the selected fan/accessory drawing.

VCON / TECHNICAL DATA

# VCON

Connector

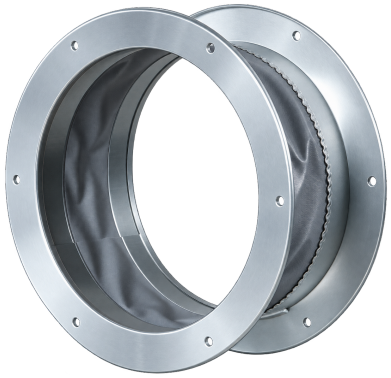

A circular connector for the selected fan connection.

Connects the fan assembly to the adjoining circular installation.

| Code | Nominal connection Ø / mm |
|---|---|
| **VCON** | 400 |
| **VCON** | 450 |
| **VCON** | 500 |
| **VCON** | 560 |
| **VCON** | 630 |
| **VCON** | 710 |
| **VCON** | 800 |
| **VCON** | 900 |
| **VCON** | 1,000 |
| **VCON** | 1,250 |

The approved product image shows a flanged connection arrangement. Confirm the actual joint construction, length, flange pattern and operating duty.

VCON / INSTALLATION EXAMPLE

# Connect the fan and duct interfaces.

Illustrative arrangement only. Other compatible fan models may be used after connection and duty checks.

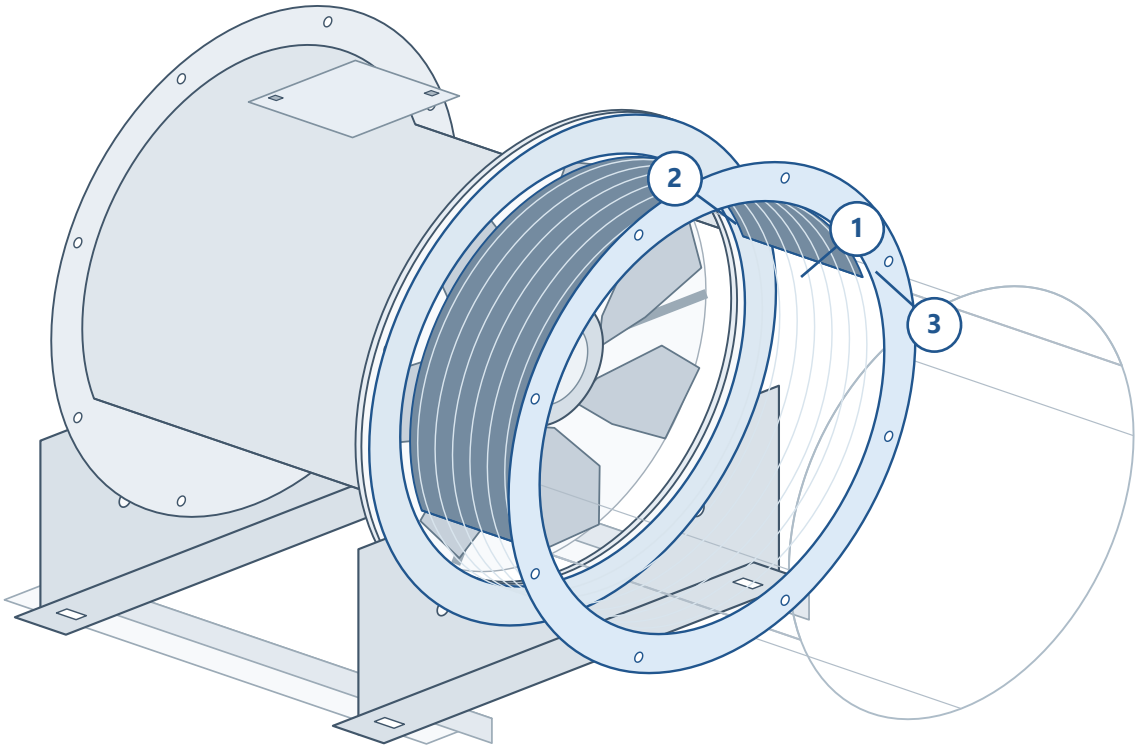


### 01 / Connector

The flanged connector is shown between the fan and adjoining duct.

### 02 / Fan-side flange

Confirm size, flange pattern, sealing and fastening.

### 03 / Duct-side flange

Coordinate the second interface, joint length and duct support.

Illustrative arrangement, not to scale. Final interface pattern, fixing details, dimensions and installation requirements follow the selected fan/accessory drawing.

VCON-FX-C / TECHNICAL DATA

# VCON-FX-C

Circular Flexible Connector



A flexible connection for a circular duct interface.

Forms a flexible joint between the fan or ventilation unit and the adjoining circular duct.

| Code | Connection Ø / mm |
|---|---|
| **VCON-FX-C** | 100 |
| **VCON-FX-C** | 125 |
| **VCON-FX-C** | 150 |
| **VCON-FX-C** | 200 |
| **VCON-FX-C** | 250 |
| **VCON-FX-C** | 315 |
| **VCON-FX-C** | 355 |
| **VCON-FX-C** | 400 |
| **VCON-FX-C** | 450 |

| Code | Connection Ø / mm |
|---|---|
| **VCON-FX-C** | 500 |
| **VCON-FX-C** | 560 |
| **VCON-FX-C** | 630 |
| **VCON-FX-C** | 710 |
| **VCON-FX-C** | 800 |
| **VCON-FX-C** | 900 |
| **VCON-FX-C** | 1,000 |
| **VCON-FX-C** | 1,120 |
| **VCON-FX-C** | 1,250 |

Match the nominal diameter, then confirm joint length, fixing method and service conditions. The illustrated assembly includes a project-specific mating interface.

VCON-FX-C / INSTALLATION EXAMPLE

# Adapt the circular connection.

Illustrative arrangement only. Other compatible fan models may be used after connection and duty checks.

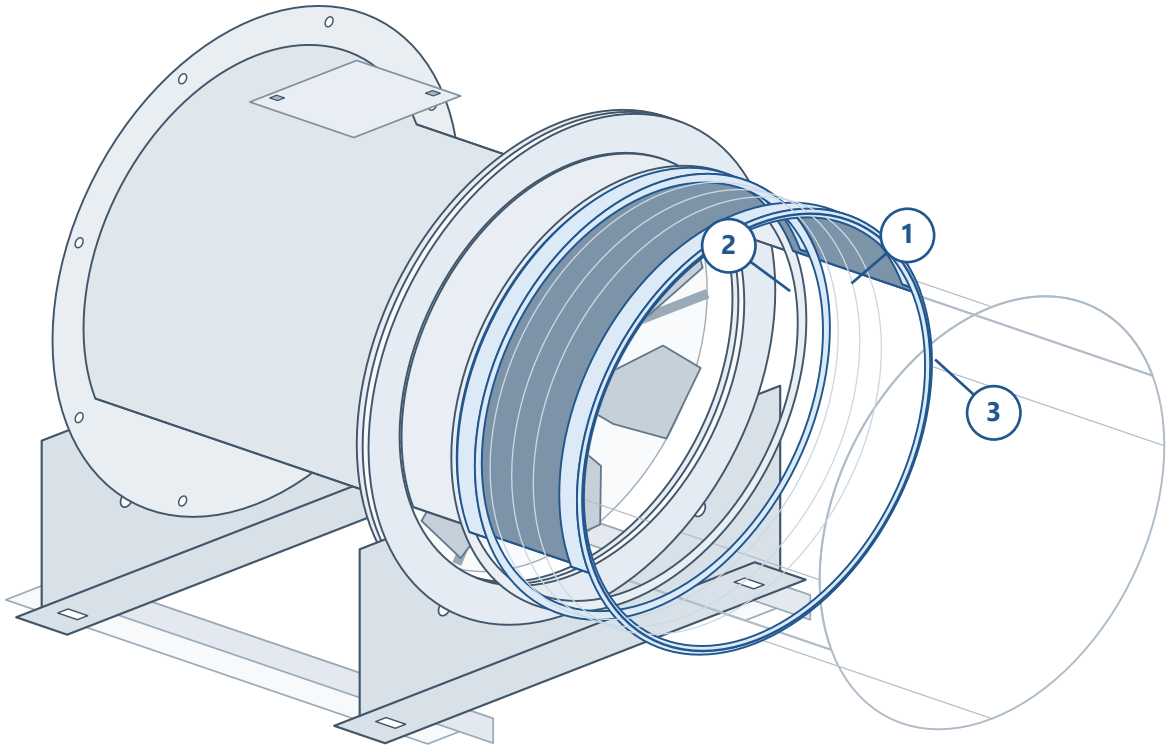


### 01 / Flexible joint

The highlighted sleeve joins the two circular mating interfaces.

### 02 / Separate adaptor

The illustrated flange-to-spigot interface is a project-specific arrangement.

### 03 / Duct interface

Confirm the fixing method, joint loading and service conditions.

The grey mating adaptor is separate from the flexible sleeve. Confirm its design and the actual fan/accessory compatibility for the selected assembly.

VCON-FX-R / TECHNICAL DATA

# VCON-FX-R

Rectangular Flexible Connector

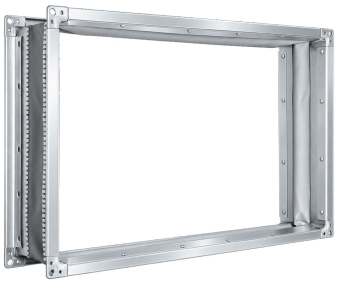

A flexible connection for a rectangular duct interface.

Forms a flexible joint between a ventilation assembly and the adjoining rectangular duct.

| Listed model | W / mm | H / mm |
|---|---|---|
| **VCON-FX-R 30-15** | 300 | 150 |
| **VCON-FX-R 40-20** | 400 | 200 |
| **VCON-FX-R 50-25** | 500 | 250 |
| **VCON-FX-R 50-30** | 500 | 300 |
| **VCON-FX-R 60-30** | 600 | 300 |
| **VCON-FX-R 60-35** | 600 | 350 |
| **VCON-FX-R 70-40** | 700 | 400 |
| **VCON-FX-R 80-50** | 800 | 500 |
| **VCON-FX-R 100-50** | 1,000 | 500 |

Choose the width and height of the connection. The 30-15 suffix corresponds to a 300 x 150 mm connection. The application view is a rectangular duct assembly example.

VCON-FX-R / INSTALLATION EXAMPLE

# Join the fan to rectangular duct.

Illustrative arrangement only. Other compatible fan models may be used after connection and duty checks.

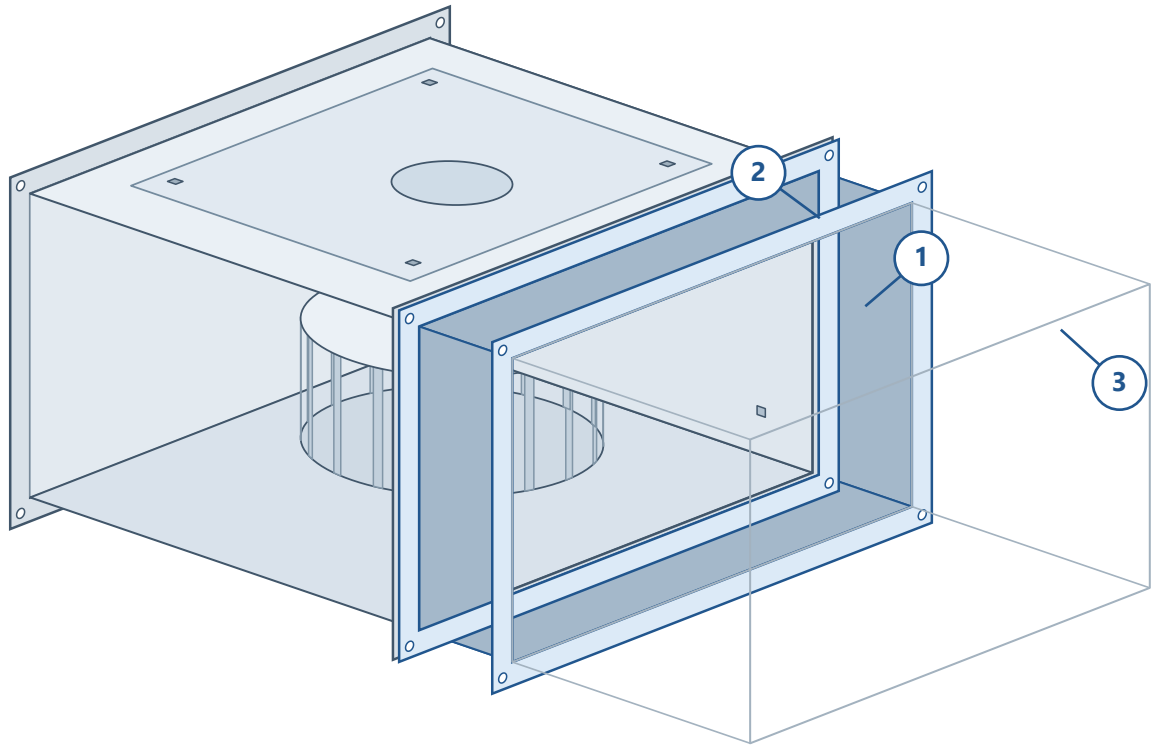


**01 / Flexible connector**

The highlighted rectangular joint connects to the selected duct fan.

**02 / Fan flange**

Match the nominal W/H and the actual mating flange pattern.

**03 / Rectangular duct**

Coordinate the downstream joint, fixing and independent support.

VCON-FX-R is shown in a rectangular connection example. Confirm nominal W/H, joint length, actual flange pattern and support for the offered assembly.

VAXS / TECHNICAL DATA

# VAXS

Silencer

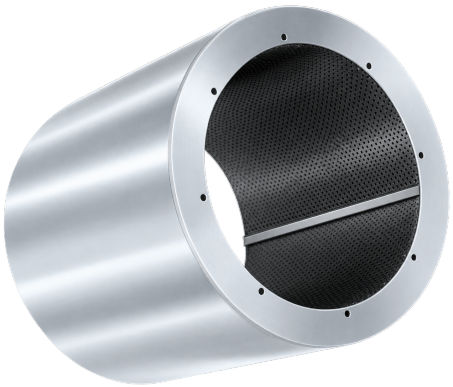

An axial fan silencer for the selected ventilation arrangement.

An acoustic accessory positioned within the fan and duct arrangement to address transmitted fan noise.

| Code | Nominal connection Ø / mm |
|---|---|
| **VAXS** | 400 |
| **VAXS** | 450 |
| **VAXS** | 500 |
| **VAXS** | 560 |
| **VAXS** | 630 |
| **VAXS** | 710 |
| **VAXS** | 800 |
| **VAXS** | 900 |
| **VAXS** | 1,000 |
| **VAXS** | 1,250 |

Match the nominal connection size. Final attenuation, pressure loss, outer envelope and silencer length require the selected unit data and installation drawing.

VAXS / INSTALLATION EXAMPLE

# Place the silencer at the fan connection.

Illustrative arrangement only. Other compatible fan models may be used after connection and duty checks.

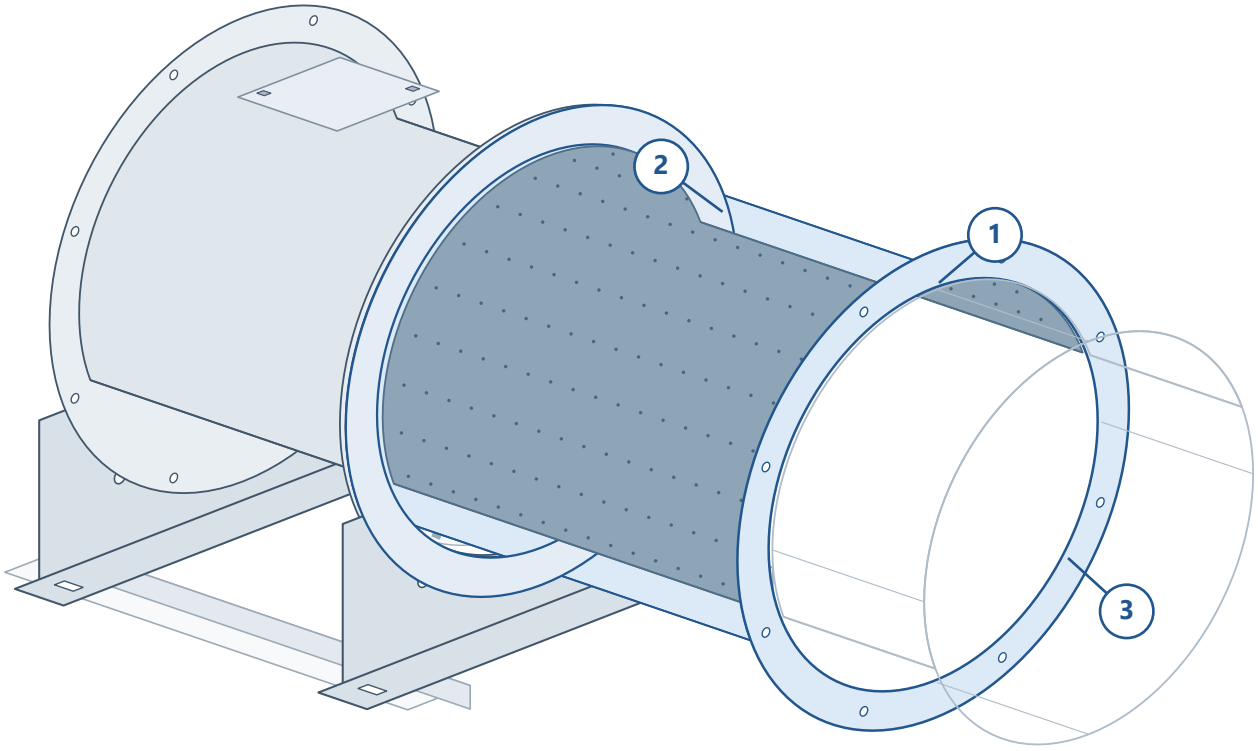


### 01 / VAXS silencer

The highlighted casing and lining identify the acoustic accessory.

### 02 / Fan flange

Match the nominal connection and the actual mating flange.

### 03 / Silencer outlet

Confirm the selected length, downstream connection and support.

Lining principle view. Silencer length, attenuation, pressure loss and support design are selected separately. No numerical acoustic or temperature rating is inferred from the illustration.

VBDD-MCH-R / TECHNICAL DATA

# VBDD-MCH-R

Rectangular Back Draft Damper



A rectangular backdraft damper for a ventilation opening or duct connection.

Used where the ventilation arrangement requires a backdraft-control element.

Listed nominal combinations: choose width W by row and height H by column. All dimensions in mm.

| W / H | 200 | 300 | 400 | 500 | 600 | 700 | 800 | 900 | 1,000 | 1,100 | 1,200 | 1,300 | 1,400 | 1,500 |
|---|---|---|---|---|---|---|---|---|---|---|---|---|---|---|
| 200 | • | • | • | • | • | • | • | • | • | • | • | • | • | • |
| 300 | • | • | • | • | • | • | • | • | • | • | • | • | • | • |
| 400 | • | • | • | • | • | • | • | • | • | • | • | • | • | • |
| 500 | • | • | • | • | • | • | • | • | • | • | • | • | • | • |
| 600 | • | • | • | • | • | • | • | • | • | • | • | • | • | • |
| 700 | • | • | • | • | • | • | • | • | • | • | • | • | • | • |
| 800 | • | • | • | • | • | • | • | • | • | • | • | • | • | • |
| 900 | • | • | • | • | • | • | • | • | • | • | • | • | • | • |
| 1,000 | • | • | • | • | • | • | • | • | • | • | • | • | • | • |
| 1,100 | • | • | • | • | • | • | • | • | • | • | • | • | • | • |
| 1,200 | • | • | • | • | • | • | • | • | • | • | • | • | • | • |
| 1,300 | • | • | • | • | • | • | • | • | • | • | • | • | • | • |
| 1,400 | • | • | • | • | • | • | • | • | • | • | • | • | • | • |
| 1,500 | • | • | • | • | • | • | • | • | • | • | • | • | • | • |

• = listed combination. Nominal W/H only; frame envelope, depth, fixing and opening characteristics require selection confirmation.

VBDD-MCH-R / RECTANGULAR DUCT APPLICATION

# Show the damper between two ducts.

Rectangular duct example. Duct sections are separated to expose the damper frame and mating faces.

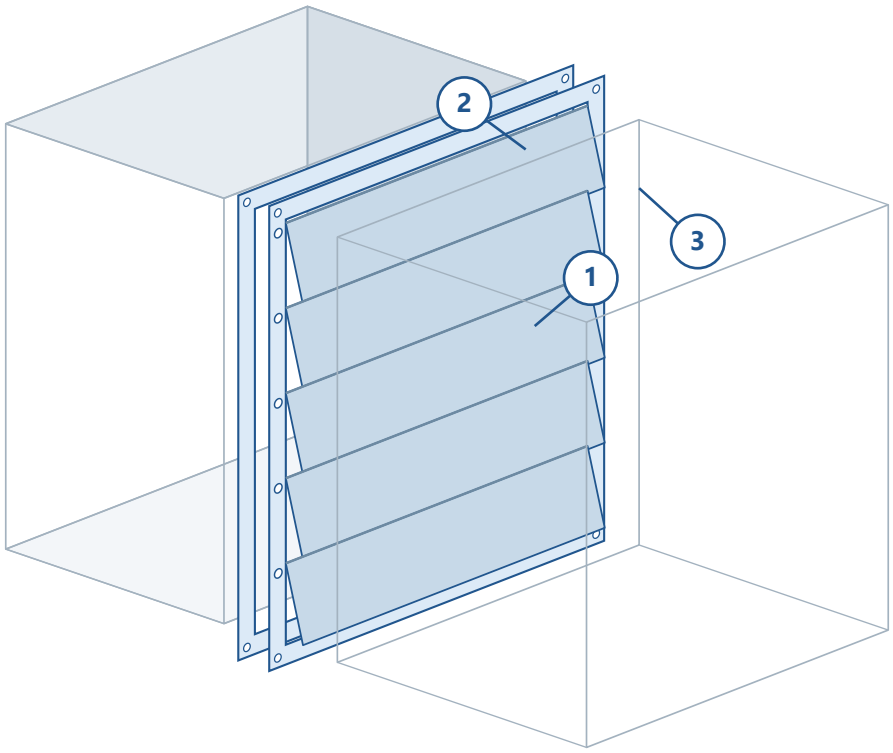


**01 / Backdraft damper**

The framed blade assembly is shown between rectangular ducts.

**02 / Upstream duct**

The duct is separated from the frame to expose the connection.

**03 / Downstream duct**

Outline ductwork keeps the damper and its mating face visible.

Interface view with duct sections separated for clarity. Confirm the final mating position, mounting orientation and blade opening characteristics for the project.

03 / ASSEMBLY COORDINATION

# Select the assembly interfaces.

Use each application view as an example with the nominal schedule and the selected equipment connection drawing.

| Code | Illustrated interface | Selection confirmation |
|---|---|---|
| **VMAV** | Fan end-flange support | Fan nominal size; foot/fixing drawing |
| **VVIS** | Mounting foot to structure | Fan nominal size; spring load/quantity |
| **VCOF** | Mating flange | Nominal Ø; flange and sealing pattern |
| **VGG** | Exposed fan opening | Nominal Ø; guarding and attachment |
| **VCON** | Flanged connection | Nominal Ø; construction and length |
| **VCON-FX-C** | Mating adaptor / sleeve | Project-specific interface review |
| **VCON-FX-R** | Rectangular connection | Nominal W/H; flange and joint length |
| **VAXS** | Circular silencer connection | Nominal Ø; selected acoustic data |
| **VBDD-MCH-R** | Rectangular duct connection | Nominal W/H; orientation and response |

## APPLICATION BASIS

The pictured fans illustrate installation principles, not a restricted list of compatible models. Select the connection, duty, support and service access for the offered assembly. A separate mating adaptor may be required; confirm its design for the selected equipment.

Illustrations do not establish accessory temperature/fire classification or certification of the assembled system. Confirm the offered configuration and supporting documentation.

04 / PROJECT CONNECTION DRAWING

# Specify the complete arrangement.

Use the schedule and application view to prepare the actual installation package for the selected fan and accessories.

| Coordination topic | Include in the project drawing |
|---|---|
| **Fan & accessory selection** | Exact fan model and accessory size; identify any separate mating part. |
| **Mechanical interfaces** | Flange outside dimensions, bolt circle, hole pattern, sealing and fixing detail. |
| **Support & isolation** | Actual fan/duct masses, support positions, foot details and isolator loads. |
| **Flexible joints** | Joint construction/length, fixing method, loading and operating conditions. |
| **Silencing** | Selected silencer length, acoustic/pressure-loss data and independent support. |
| **Damper installation** | Nominal W/H, frame envelope, orientation, blade travel and opening response. |
| **Release documents** | Unit/accessory drawings, material requirements and installation documentation. |

## Confirm the offered assembly before release.

This catalogue is an English review issue. Catalogue design approval and engineering validation of the installation remain separate.

VOLTVENT®
VENTILATION SYSTEMS



# Dampers



**VBDD-MCH-C-AL**



**VSCD-MTR-R**



**VVCD-C-MTR**

## Coordinate movement and air control.

VBDD-MCH-C-AL / VBDD-MCH-C / VSCD-MTR-R / VSCD-MTR-C / VVCD-R-MCH / VVCD-R-MTR / VVCD-C-MCH
VVCD-C-MTR

01 / PRODUCT INDEX

# Choose the control function.

Eight damper series, with nominal connection schedules and coordinated installation interface views.



**VBDD-MCH-C-AL**

Circular backdraft damper

030 / 031



**VBDD-MCH-C**

Circular backdraft damper

032 / 033



**VSCD-MTR-R**

Motorised smoke & fire control damper

034 / 035



**VSCD-MTR-C**

Motorised smoke & fire control damper

036 / 037



**VVCD-R-MCH**

Mechanical volume control damper

038 / 039

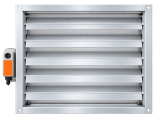

**VVCD-R-MTR**

Motorised volume control damper

040 / 041



**VVCD-C-MCH**

Mechanical volume control damper

042 / 043



**VVCD-C-MTR**

Motorised volume control damper

044 / 045

VBDD-MCH-R is documented in the separate Fan Connections & Mounting Equipment catalogue.

02 / SELECTION OVERVIEW

# Start with the system duty.

A damper name and connection size do not establish its pressure, leakage or fire performance.

| Duty | Series in this catalogue | Selection focus |
|---|---|---|
| **Backdraft control** | VBDD-MCH-C-AL VBDD-MCH-C | Opening/return mechanism; orientation; reverse-flow behaviour. |
| **Manual air balancing** | VVCD-R-MCH VVCD-C-MCH | Blade action; adjustment access; balancing and locking. |
| **Motorised air regulation** | VVCD-R-MTR VVCD-C-MTR | Torque; supply; control signal; travel; feedback. |
| **Project fire / smoke strategy** | VSCD-MTR-R VSCD-MTR-C | Required function; classification; control sequence; installation evidence. |

## CONNECTION SIZE IS THE STARTING POINT

Circular sizes use nominal Ø. Rectangular sizes use nominal neck W × H. These schedules retain the listed selection references; they do not specify outside frame dimensions, casing depth, fixing holes or an approved fan/damper assembly.

Fire compartmentation and smoke-control duties require their own selected product evidence. A volume-control damper must not be assigned a fire or smoke duty from its appearance or motorised operation.

VBDD-MCH-C-AL / SIZE SCHEDULE

# VBDD-MCH-C-AL

Circular backdraft damper / Flanged circular connection



For a circular ventilation line where reverse-flow control is part of the system arrangement. Select the nominal connection size and confirm the operating orientation.

**10 listed nominal diameters. Dimensions in mm.**

| Nominal Ø / mm |
|---|
| 400 |
| 450 |
| 500 |
| 560 |
| 630 |

| Nominal Ø / mm |
|---|
| 710 |
| 800 |
| 900 |
| 1,000 |
| 1,250 |

Confirm the offered blade/return mechanism, opening pressure and reverse-flow leakage before selection.

VBDD-MCH-C-AL / INSTALLATION INTERFACE

# Coordinate the connection.

Flanged circular connection. Duct sections are separated to expose the damper and adjoining interfaces.

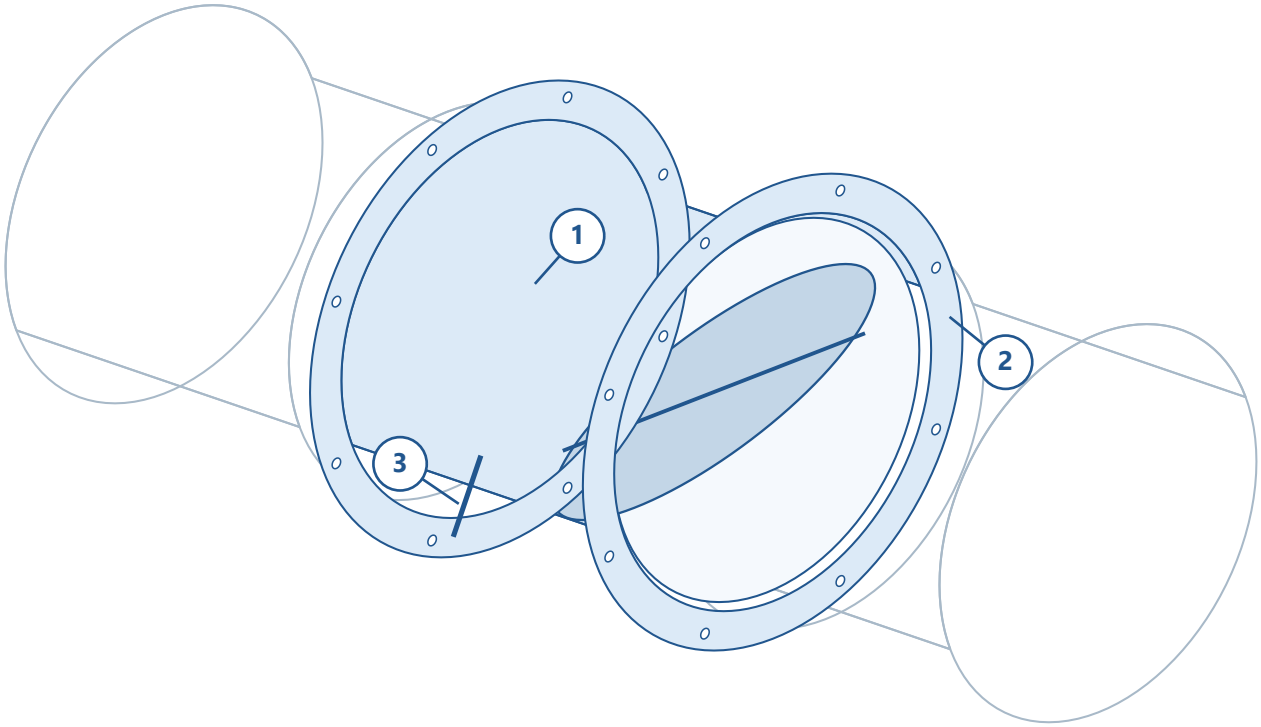


### 01 / Damper assembly

Confirm the offered backdraft function and permitted mounting orientation.

### 02 / Circular interface

Match the mating connection and seal. Do not load the casing through unsupported ductwork.

### 03 / Operating mechanism

Confirm opening/return action and inspection access. The image does not establish opening pressure.

## SYSTEM COORDINATION

Illustrations show connection principles, not a restricted list of compatible fan models. Confirm the selected equipment interface, duty, operating configuration and installation requirements for each assembly.

Illustrative interface view, not to scale. Final dimensions, support, orientation and installation requirements follow the selected product drawing.

VBDD-MCH-C / SIZE SCHEDULE

# VBDD-MCH-C

Circular backdraft damper / Circular connection



A circular damper listed for backdraft-control applications. Coordinate the connection, accessible external mechanism and the offered operating arrangement.

**18 listed nominal diameters. Dimensions in mm.**

| Nominal Ø / mm |
|---|
| 100 |
| 125 |
| 150 |
| 200 |
| 250 |
| 315 |
| 355 |
| 400 |
| 450 |

| Nominal Ø / mm |
|---|
| 500 |
| 560 |
| 630 |
| 710 |
| 800 |
| 900 |
| 1,000 |
| 1,120 |
| 1,250 |

Confirm the opening/return mechanism and the function of the external lever shown. No automatic return behaviour is assigned from the image.

VBDD-MCH-C / INSTALLATION INTERFACE

# Coordinate the connection.

Circular connection. Duct sections are separated to expose the damper and adjoining interfaces.

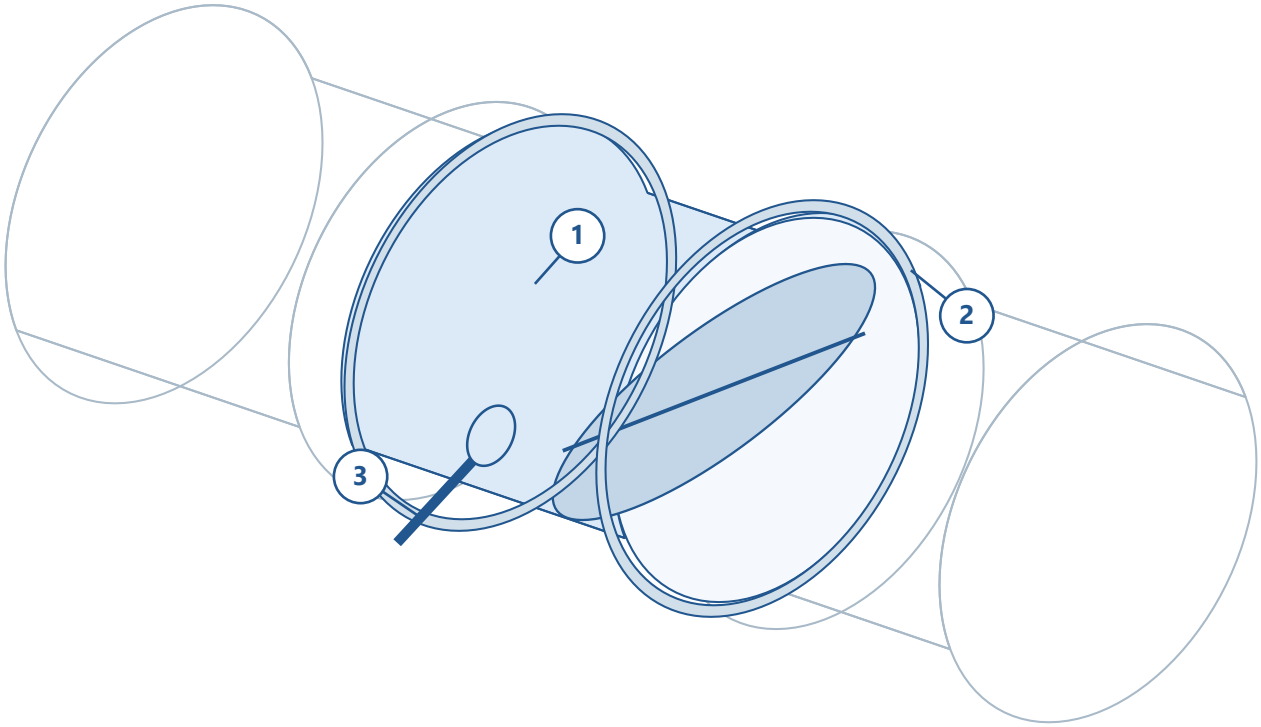


### 01 / Damper assembly

Confirm the offered backdraft function and permitted mounting orientation.

### 02 / Circular interface

Match the mating connection and seal. Do not load the casing through unsupported ductwork.

### 03 / Operating mechanism

Confirm opening/return action and inspection access. The image does not establish opening pressure.

## SYSTEM COORDINATION

Illustrations show connection principles, not a restricted list of compatible fan models. Confirm the selected equipment interface, duty, operating configuration and installation requirements for each assembly.

Illustrative interface view, not to scale. Final dimensions, support, orientation and installation requirements follow the selected product drawing.

VSCD-MTR-R / SIZE SCHEDULE

# VSCD-MTR-R

Motorised smoke & fire control damper / Rectangular connection



A motorised rectangular damper listed for coordination with the project fire and smoke strategy. Define the required function before selecting the unit.

**112 listed nominal W × H combinations. Dimensions in mm.**

| H / W | 100 | 200 | 300 | 400 | 500 | 600 | 700 | 800 |
|---|---|---|---|---|---|---|---|---|
| 200 | • | • | • | • | • | • | • | • |
| 300 | • | • | • | • | • | • | • | • |
| 400 | • | • | • | • | • | • | • | • |
| 500 | • | • | • | • | • | • | • | • |
| 600 | • | • | • | • | • | • | • | • |
| 700 | • | • | • | • | • | • | • | • |
| 800 | • | • | • | • | • | • | • | • |
| 900 | • | • | • | • | • | • | • | • |
| 1000 | • | • | • | • | • | • | • | • |
| 1100 | • | • | • | • | • | • | • | • |
| 1200 | • | • | • | • | • | • | • | • |
| 1300 | • | • | • | • | • | • | • | • |
| 1400 | • | • | • | • | • | • | • | • |
| 1500 | • | • | • | • | • | • | • | • |

All dimensions in mm. • = listed nominal neck combination. 112 combinations.

The exact fire or smoke-control function, classification, actuator, power-loss position and tested installation require product-specific evidence.

VSCD-MTR-R / INSTALLATION INTERFACE

# Coordinate the connection.

Rectangular connection. Duct sections are separated to expose the damper and adjoining interfaces.

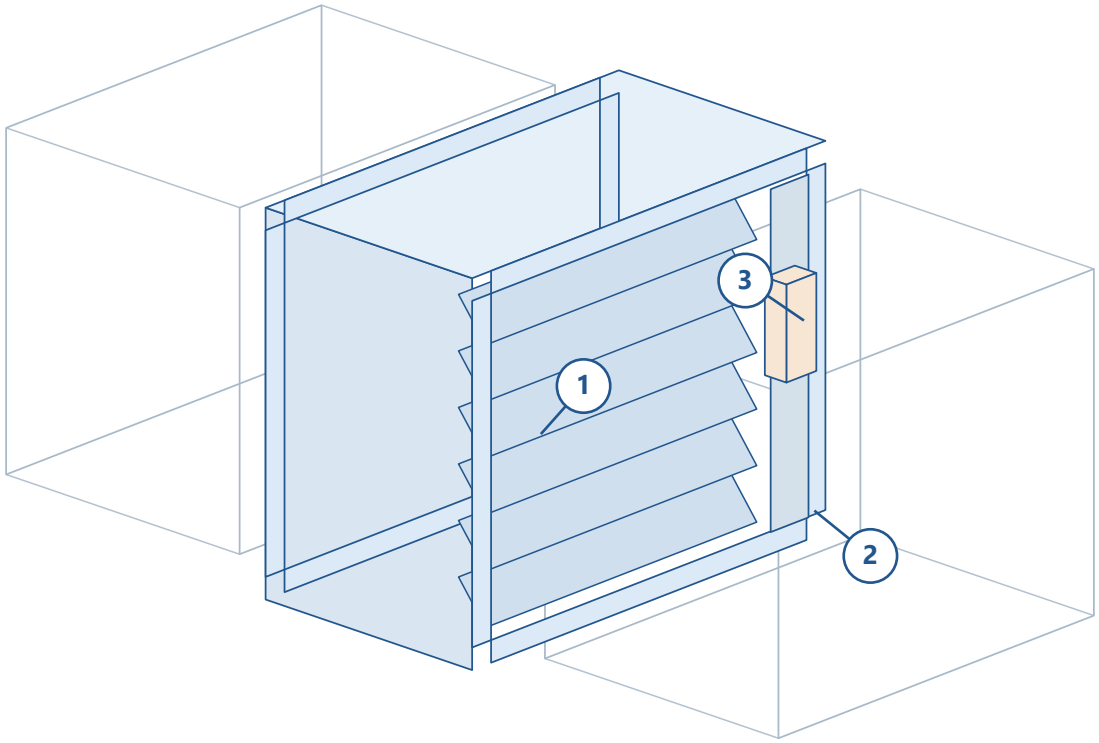


### 01 / Damper body

Confirm the required fire or smoke-control function and the offered construction.

### 02 / Mating duct interface

The view shows duct interfaces only. It does not define a tested wall or floor penetration.

### 03 / Actuator & access

Define normal, alarm and power-loss positions. Keep inspection and actuator service access.

## SYSTEM COORDINATION

Illustrations show connection principles, not a restricted list of compatible fan models. Confirm the selected equipment interface, duty, operating configuration and installation requirements for each assembly.

Illustrative interface view, not to scale. Final dimensions, support, orientation and installation requirements follow the selected product drawing.

VSCD-MTR-C / SIZE SCHEDULE

# VSCD-MTR-C

Motorised smoke & fire control damper / Circular connection



A motorised circular damper listed for coordination with the project fire and smoke strategy. Nominal duct size is only one part of the selection.

**16 listed nominal diameters. Dimensions in mm.**

| Nominal Ø / mm |
|---|
| 100 |
| 125 |
| 150 |
| 160 |
| 180 |
| 200 |
| 224 |
| 250 |

| Nominal Ø / mm |
|---|
| 280 |
| 300 |
| 315 |
| 355 |
| 400 |
| 450 |
| 500 |
| 560 |

The exact fire or smoke-control function, classification, actuator, power-loss position and tested installation require product-specific evidence.

VSCD-MTR-C / INSTALLATION INTERFACE

# Coordinate the connection.

Circular connection. Duct sections are separated to expose the damper and adjoining interfaces.

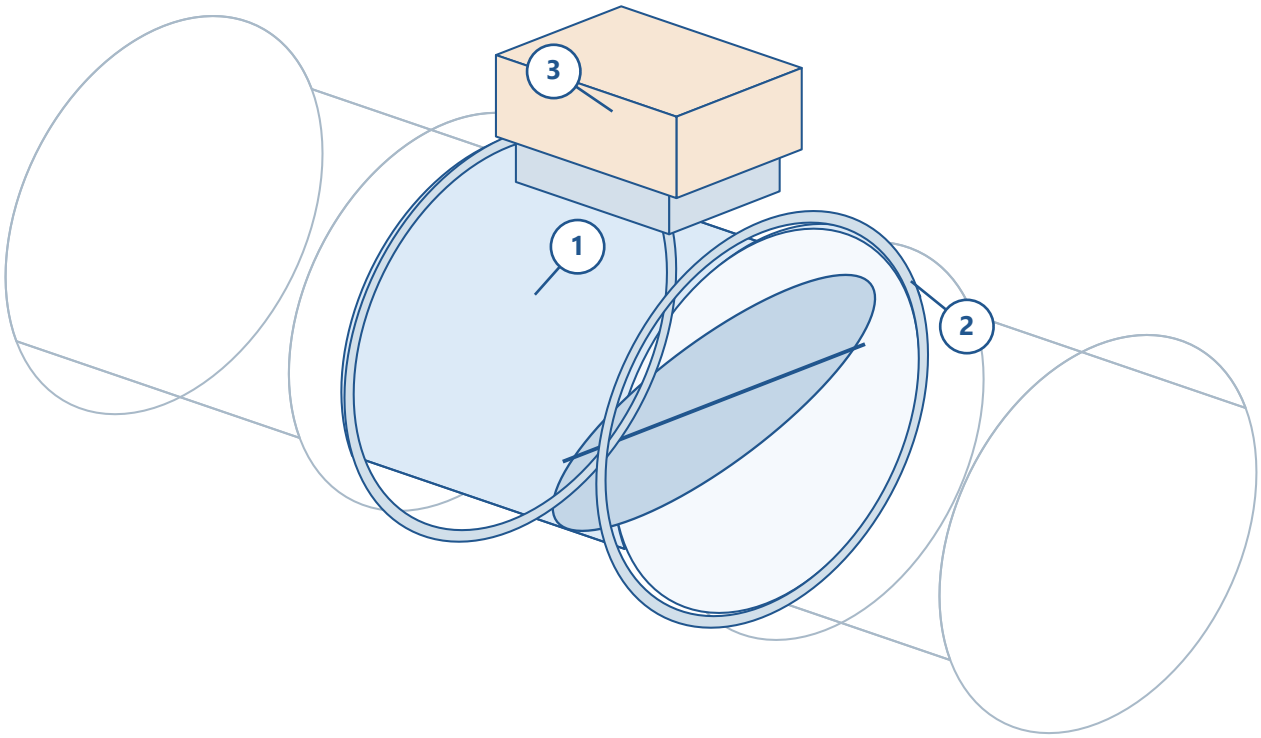


### 01 / Damper body

Confirm the required fire or smoke-control function and the offered construction.

### 02 / Mating duct interface

The view shows duct interfaces only. It does not define a tested wall or floor penetration.

### 03 / Actuator & access

Define normal, alarm and power-loss positions. Keep inspection and actuator service access.

## SYSTEM COORDINATION

Illustrations show connection principles, not a restricted list of compatible fan models. Confirm the selected equipment interface, duty, operating configuration and installation requirements for each assembly.

Illustrative interface view, not to scale. Final dimensions, support, orientation and installation requirements follow the selected product drawing.

VVCD-R-MCH / SIZE SCHEDULE

# VVCD-R-MCH

Mechanical volume control damper / Rectangular connection



A manually adjusted regulating point for rectangular ventilation ductwork. Coordinate access to the operating mechanism and the final air-balancing procedure.

**204 listed nominal W × H combinations. Dimensions in mm.**

| H / W | 200 | 300 | 400 | 500 | 600 | 800 | 1000 | 1200 | 1400 | 1600 | 1800 | 2000 |
|---|---|---|---|---|---|---|---|---|---|---|---|---|
| 105 | • | • | • | • | • | • | • | • | • | • | • | • |
| 205 | • | • | • | • | • | • | • | • | • | • | • | • |
| 305 | • | • | • | • | • | • | • | • | • | • | • | • |
| 405 | • | • | • | • | • | • | • | • | • | • | • | • |
| 505 | • | • | • | • | • | • | • | • | • | • | • | • |
| 605 | • | • | • | • | • | • | • | • | • | • | • | • |
| 705 | • | • | • | • | • | • | • | • | • | • | • | • |
| 805 | • | • | • | • | • | • | • | • | • | • | • | • |
| 905 | • | • | • | • | • | • | • | • | • | • | • | • |
| 1005 | • | • | • | • | • | • | • | • | • | • | • | • |
| 1105 | • | • | • | • | • | • | • | • | • | • | • | • |
| 1205 | • | • | • | • | • | • | • | • | • | • | • | • |
| 1305 | • | • | • | • | • | • | • | • | • | • | • | • |
| 1405 | • | • | • | • | • | • | • | • | • | • | • | • |
| 1505 | • | • | • | • | • | • | • | • | • | • | • | • |
| 1605 | • | • | • | • | • | • | • | • | • | • | • | • |
| 1705 | • | • | • | • | • | • | • | • | • | • | • | • |

All dimensions in mm. • = listed nominal neck combination. 204 combinations.

Confirm blade action, locking arrangement, pressure loss and leakage for the selected duty. Listed sizes do not define the frame envelope.

VVCD-R-MCH / INSTALLATION INTERFACE

# Coordinate the connection.

Rectangular connection. Duct sections are separated to expose the damper and adjoining interfaces.

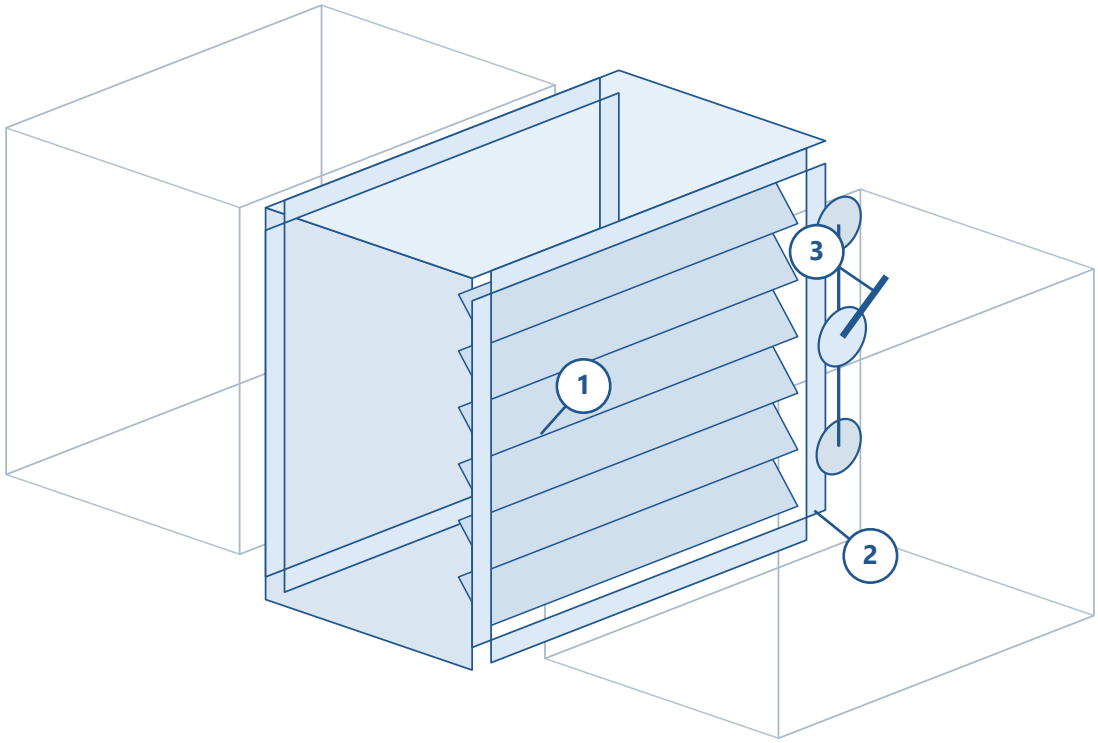


### 01 / Blade & casing

Confirm blade action, travel and the selected operating limits.

### 02 / Connection joint

Match nominal neck size and joint method. Keep the frame or casing free from distortion.

### 03 / Manual adjustment

Provide access for setting and locking the damper during air balancing.

## SYSTEM COORDINATION

Illustrations show connection principles, not a restricted list of compatible fan models. Confirm the selected equipment interface, duty, operating configuration and installation requirements for each assembly.

Illustrative interface view, not to scale. Final dimensions, support, orientation and installation requirements follow the selected product drawing.

VVCD-R-MTR / SIZE SCHEDULE

# VVCD-R-MTR

Motorised volume control damper / Rectangular connection

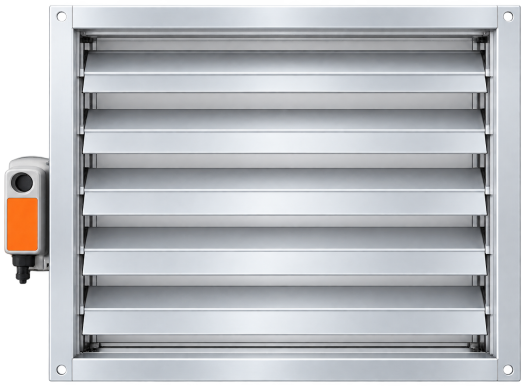

A motor-operated regulating point for rectangular ventilation ductwork. Specify the required control action and position indication with the mechanical selection.

**204 listed nominal W × H combinations. Dimensions in mm.**

| H / W | 200 | 300 | 400 | 500 | 600 | 800 | 1000 | 1200 | 1400 | 1600 | 1800 | 2000 |
|---|---|---|---|---|---|---|---|---|---|---|---|---|
| 105 | • | • | • | • | • | • | • | • | • | • | • | • |
| 205 | • | • | • | • | • | • | • | • | • | • | • | • |
| 305 | • | • | • | • | • | • | • | • | • | • | • | • |
| 405 | • | • | • | • | • | • | • | • | • | • | • | • |
| 505 | • | • | • | • | • | • | • | • | • | • | • | • |
| 605 | • | • | • | • | • | • | • | • | • | • | • | • |
| 705 | • | • | • | • | • | • | • | • | • | • | • | • |
| 805 | • | • | • | • | • | • | • | • | • | • | • | • |
| 905 | • | • | • | • | • | • | • | • | • | • | • | • |
| 1005 | • | • | • | • | • | • | • | • | • | • | • | • |
| 1105 | • | • | • | • | • | • | • | • | • | • | • | • |
| 1205 | • | • | • | • | • | • | • | • | • | • | • | • |
| 1305 | • | • | • | • | • | • | • | • | • | • | • | • |
| 1405 | • | • | • | • | • | • | • | • | • | • | • | • |
| 1505 | • | • | • | • | • | • | • | • | • | • | • | • |
| 1605 | • | • | • | • | • | • | • | • | • | • | • | • |
| 1705 | • | • | • | • | • | • | • | • | • | • | • | • |

All dimensions in mm. • = listed nominal neck combination. 204 combinations.

Select actuator torque, supply, signal, travel and any safety function separately. Motorised operation does not establish a fire or smoke classification.

VVCD-R-MTR / INSTALLATION INTERFACE

# Coordinate the connection.

Rectangular connection. Duct sections are separated to expose the damper and adjoining interfaces.

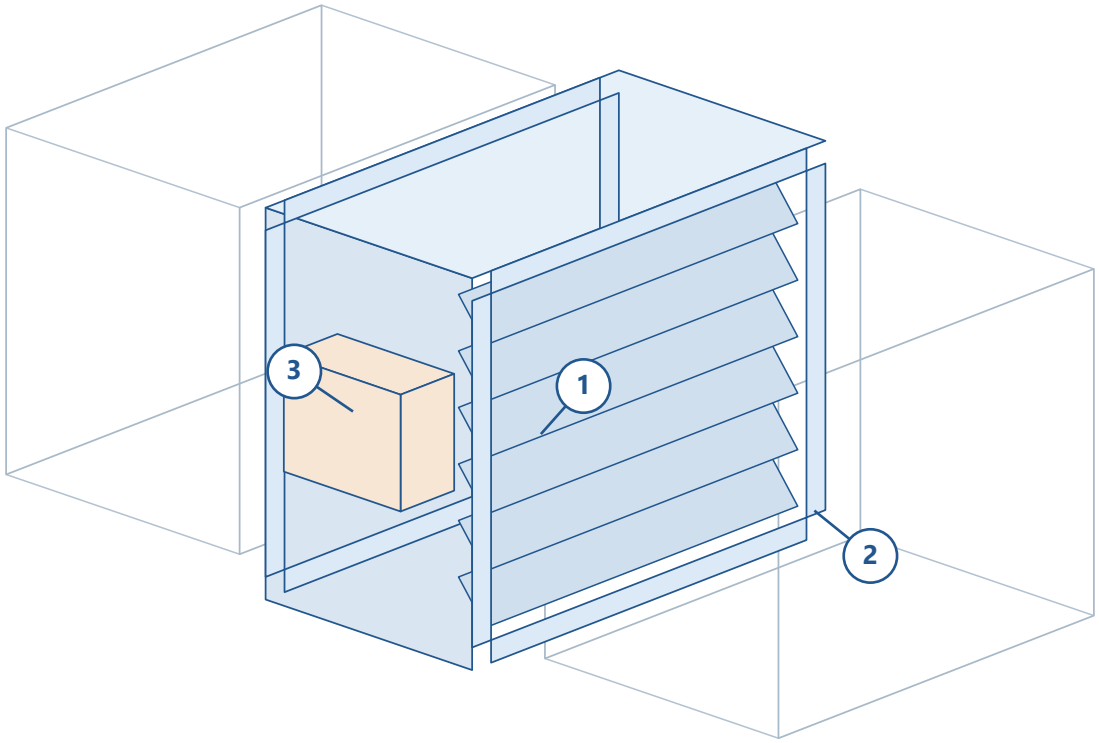


### 01 / Regulating assembly

Confirm blade action and the required regulating duty for the selected size.

### 02 / Connection joint

Match nominal neck size, joint method and independent duct support.

### 03 / Drive & service access

Confirm torque, supply, signal and feedback. Allow access to drive and shaft.

## SYSTEM COORDINATION

Illustrations show connection principles, not a restricted list of compatible fan models. Confirm the selected equipment interface, duty, operating configuration and installation requirements for each assembly.

Illustrative interface view, not to scale. Final dimensions, support, orientation and installation requirements follow the selected product drawing.

VVCD-C-MCH / SIZE SCHEDULE

# VVCD-C-MCH

Mechanical volume control damper / Circular connection



A manually adjusted regulating point for circular ventilation ductwork. Keep the operating handle accessible for air balancing and subsequent inspection.

**16 listed nominal diameters. Dimensions in mm.**

| Nominal Ø / mm |
|---|
| 100 |
| 125 |
| 150 |
| 160 |
| 180 |
| 200 |
| 224 |
| 250 |

| Nominal Ø / mm |
|---|
| 280 |
| 300 |
| 315 |
| 355 |
| 400 |
| 450 |
| 500 |
| 560 |

Confirm blade travel, locking and joint details. Nominal diameter does not define casing length, pressure loss or leakage.

VVCD-C-MCH / INSTALLATION INTERFACE

# Coordinate the connection.

Circular connection. Duct sections are separated to expose the damper and adjoining interfaces.

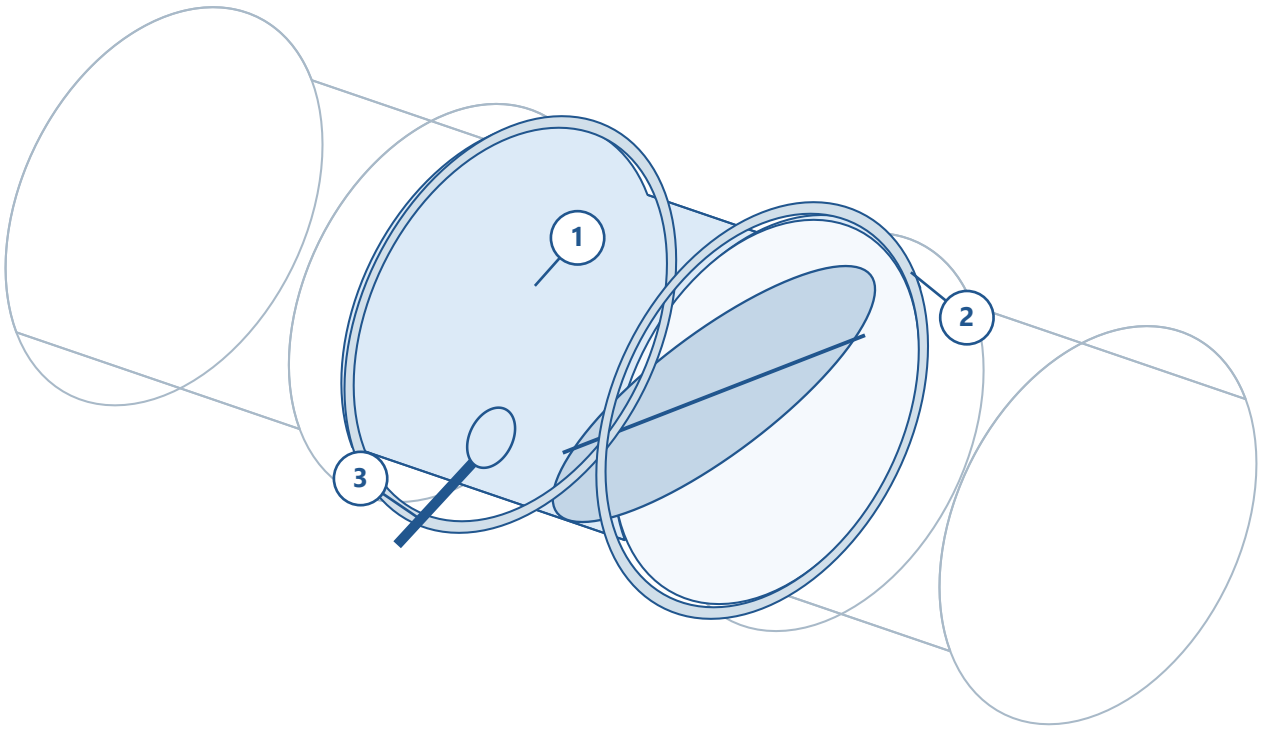


### 01 / Blade & casing

Confirm blade action, travel and the selected operating limits.

### 02 / Connection joint

Match nominal neck size and joint method. Keep the frame or casing free from distortion.

### 03 / Manual adjustment

Provide access for setting and locking the damper during air balancing.

## SYSTEM COORDINATION

Illustrations show connection principles, not a restricted list of compatible fan models. Confirm the selected equipment interface, duty, operating configuration and installation requirements for each assembly.

Illustrative interface view, not to scale. Final dimensions, support, orientation and installation requirements follow the selected product drawing.

VVCD-C-MTR / SIZE SCHEDULE

# VVCD-C-MTR

Motorised volume control damper / Circular connection



A motor-operated regulating point for circular ventilation ductwork. Match the shaft/actuator arrangement to the required control sequence and available service space.

**16 listed nominal diameters. Dimensions in mm.**

| Nominal Ø / mm |
|---|
| 100 |
| 125 |
| 150 |
| 160 |
| 180 |
| 200 |
| 224 |
| 250 |

| Nominal Ø / mm |
|---|
| 280 |
| 300 |
| 315 |
| 355 |
| 400 |
| 450 |
| 500 |
| 560 |

Select actuator torque, supply, signal and feedback separately. Confirm the actual joint, casing length and operating limits.

VVCD-C-MTR / INSTALLATION INTERFACE

# Coordinate the connection.

Circular connection. Duct sections are separated to expose the damper and adjoining interfaces.

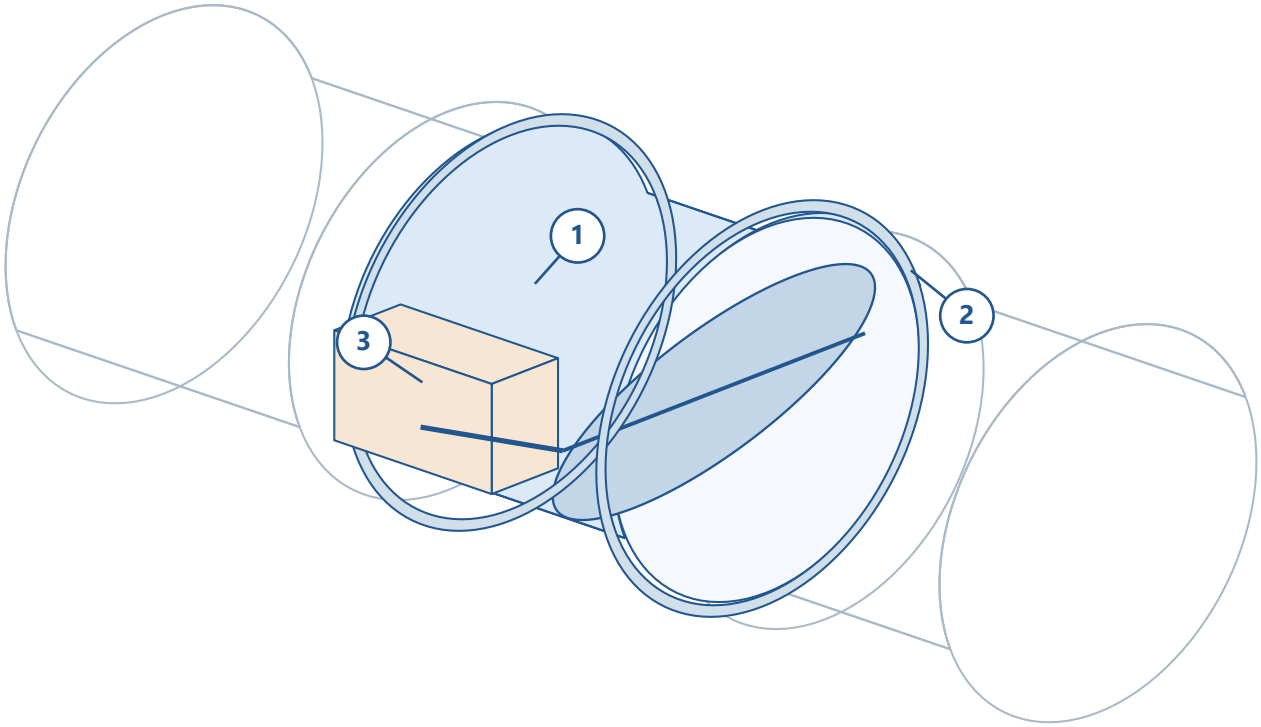


### 01 / Regulating assembly

Confirm blade action and the required regulating duty for the selected size.

### 02 / Connection joint

Match nominal neck size, joint method and independent duct support.

### 03 / Drive & service access

Confirm torque, supply, signal and feedback. Allow access to drive and shaft.

## SYSTEM COORDINATION

Illustrations show connection principles, not a restricted list of compatible fan models. Confirm the selected equipment interface, duty, operating configuration and installation requirements for each assembly.

Illustrative interface view, not to scale. Final dimensions, support, orientation and installation requirements follow the selected product drawing.

03 / MECHANISM & CONTROLS

# Define the response.

Coordinate mechanical operation and control intent before releasing the damper schedule.

| Selection item | Include in the project schedule |
|---|---|
| **Backdraft action** | Required flow direction, mounting attitude, opening/return mechanism and opening pressure. |
| **Manual operation** | Adjustment access, blade travel, locking method and air-balancing procedure. |
| **Motorised operation** | Supply, command signal, torque, run time, shaft interface and required position feedback. |
| **Power-loss response** | Specify the required position or action; do not infer it from the actuator colour or appearance. |
| **Fire / smoke strategy** | Identify the exact function and supporting classification; define the approved installation and control sequence. |
| **Commissioning** | Record installed orientation, mechanical freedom, control/feedback checks and the selected product documentation. |

The depicted actuator is an illustrative product feature. Its appearance does not identify an approved actuator make, voltage, torque, safety function or certified configuration.

04 / PROJECT SELECTION

# Complete the offered assembly.

Issue a coordinated product and installation package with the final project schedule.

| Required information | Selection record |
|---|---|
| **Identification** | Voltvent code, nominal size, quantity, duty and equipment / duct reference. |
| **Envelope & interfaces** | Released W/H or Ø drawing; casing depth; frame/flange outside dimensions; fixing and seal details. |
| **Air-side performance** | Selected flow, pressure loss, leakage and operating limits supported by the offered product data. |
| **Mechanical installation** | Orientation, blade travel, access, independent duct support and the specified connection method. |
| **Controls** | Exact actuator and control sequence; supply/signal; feedback; normal/alarm/power-loss response. |
| **Evidence & release** | Applicable product evidence, installation instructions, inspection and commissioning records. |

Nominal selection references are provided here. Manufacturing dimensions, air-side performance and any fire/smoke classification remain subject to the selected product documentation. This issue is a catalogue review draft.

VOLTVENT®
VENTILATION SYSTEMS



# Silencers

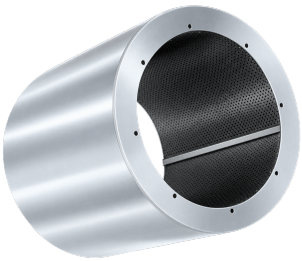

**VAXS**



**VCIS**



**VRIS**

Plan sound control along the route.

VAXS / VCIS / VRIS

01 / PRODUCT INDEX

# Three series. One acoustic brief.

Select the connection format, then coordinate acoustic duty, pressure loss and installation space.

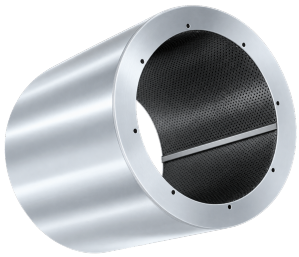

## VAXS

051 / 052

Axial fan silencer

10 circular connection sizes. Length selected for the project.



## VCIS

053 / 054

Circular inline silencer

18 circular connection sizes. Listed lengths: 500 / 1000 mm.



## VRIS

055 / 056

Rectangular inline silencer

70 rectangular size combinations. Listed length: 500 mm.

This catalogue lists nominal connection sizes and available length information. Acoustic performance, outside envelopes, masses, support loads and operating classifications require the selected product documentation.

02 / SELECTION OVERVIEW

# Match the route and the duty.

Connection size, silencer length and acoustic performance are separate selection inputs.

| Series | Connection schedule | Length information |
|---|---|---|
| **VAXS** | Ø400 to Ø1250 / 10 listed sizes | Project selection |
| **VCIS** | Ø100 to Ø1250 / 18 listed sizes | 500 mm through Ø355; 1000 mm above |
| **VRIS** | W200 to W800 × H200 to H1120 / 70 combinations | 500 mm listed |

**Application views illustrate connection principles, not exclusive model compatibility.**

### 1 Define the acoustic brief

Identify the fan sound spectrum, required downstream sound level and the relevant operating point.

### 2 Allow for air-side resistance

Select insertion loss, pressure loss and flow-generated sound together for the offered silencer.

## COORDINATE THE ACTUAL ASSEMBLY

Confirm connection geometry, available length, maintenance access, support and the operating environment. A silencer connected to a smoke extract or Ex-proof fan does not automatically inherit that fan classification.

VAXS / SIZE SCHEDULE

# VAXS

Axial fan silencer

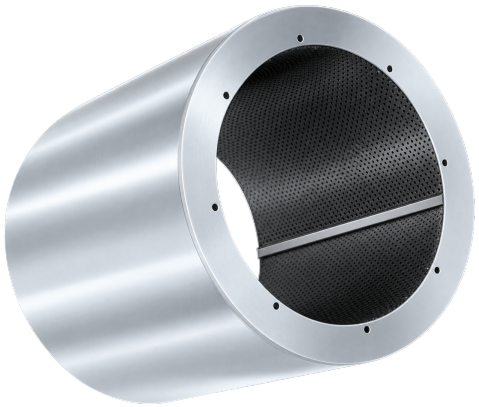

Flanged circular silencer for axial fan and duct arrangements. The installation view is illustrative; suitable models depend on the selected connection and duty.

**10 listed sizes**

| Code | Nominal connection Ø / mm |
|---|---|
| **VAXS** | 400 |
| **VAXS** | 450 |
| **VAXS** | 500 |
| **VAXS** | 560 |
| **VAXS** | 630 |
| **VAXS** | 710 |
| **VAXS** | 800 |
| **VAXS** | 900 |
| **VAXS** | 1000 |
| **VAXS** | 1250 |

Nominal connection Ø is listed. Final length, attenuation, pressure loss and support design are selected for the actual duty.

VAXS / INSTALLATION INTERFACE

# Flanged installation example

Illustrative arrangement only. Other compatible fan models may be used after connection and duty checks.

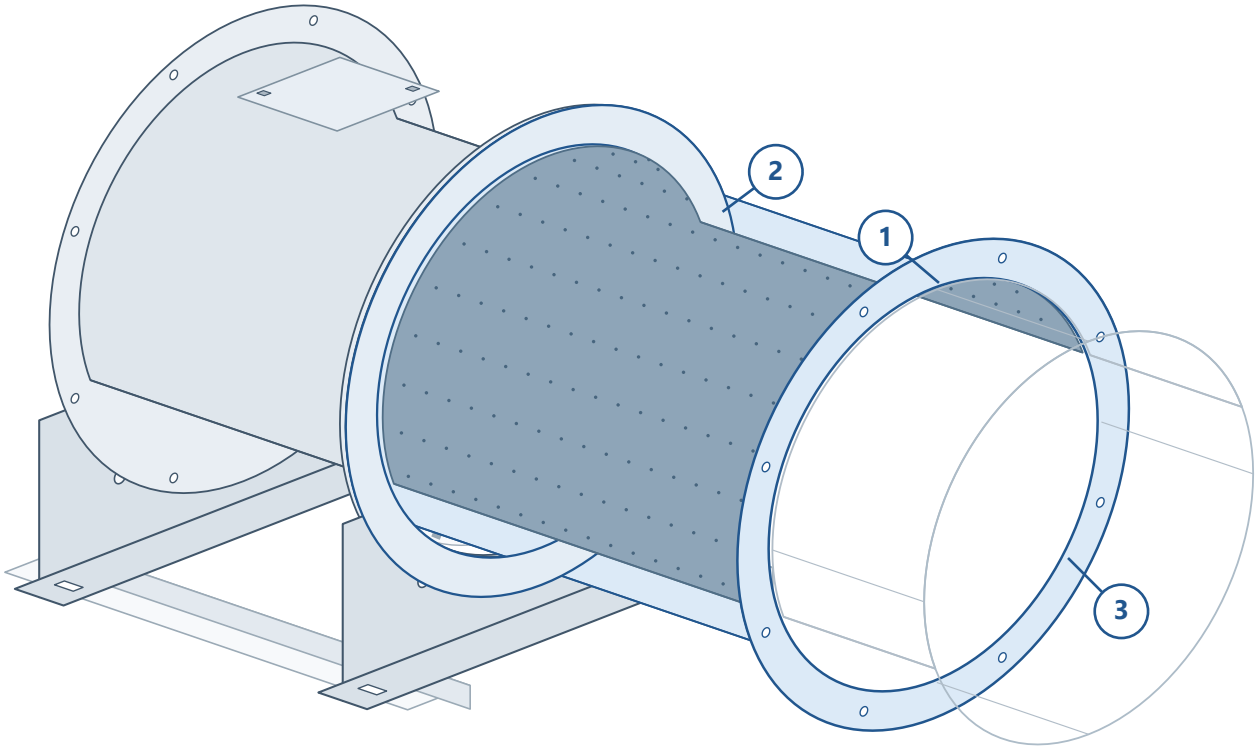


### 01 / Silencer body

Shown in a flanged circular assembly. Select the silencer length and acoustic duty for the chosen fan.

### 02 / Mating interface

Match the nominal Ø and confirm the actual flange pattern, sealing and joint.

### 03 / Acoustic air passage

The perforated inner surface is shown schematically. Confirm lining details and clear bore.



### SUPPORT & SERVICE

The pictured fan is an application example, not an exclusive model match. Confirm the selected fan/silencer interface, duty, support and service access.

Not to scale. No dimensional, acoustic or operating classification is inferred from the illustration.

VCIS / SIZE SCHEDULE

# VCIS

Circular inline silencer



A circular duct silencer for the ventilation route. Coordinate the nominal connection diameter, listed length and available installation space.

**18 listed sizes**

| Nominal Ø / mm | L / mm |
|---|---|
| 100 | 500 |
| 125 | 500 |
| 150 | 500 |
| 200 | 500 |
| 250 | 500 |
| 315 | 500 |
| 355 | 500 |
| 400 | 1000 |
| 450 | 1000 |

| Nominal Ø / mm | L / mm |
|---|---|
| 500 | 1000 |
| 560 | 1000 |
| 630 | 1000 |
| 710 | 1000 |
| 800 | 1000 |
| 900 | 1000 |
| 1000 | 1000 |
| 1120 | 1000 |
| 1250 | 1000 |

The listed length is 500 mm through Ø355 and 1000 mm for larger listed diameters. Outside casing diameter and joint details require the selected drawing.

VCIS / INSTALLATION INTERFACE

# Circular installation example

Illustrative arrangement only. Other compatible fan models may be used after connection and duty checks.

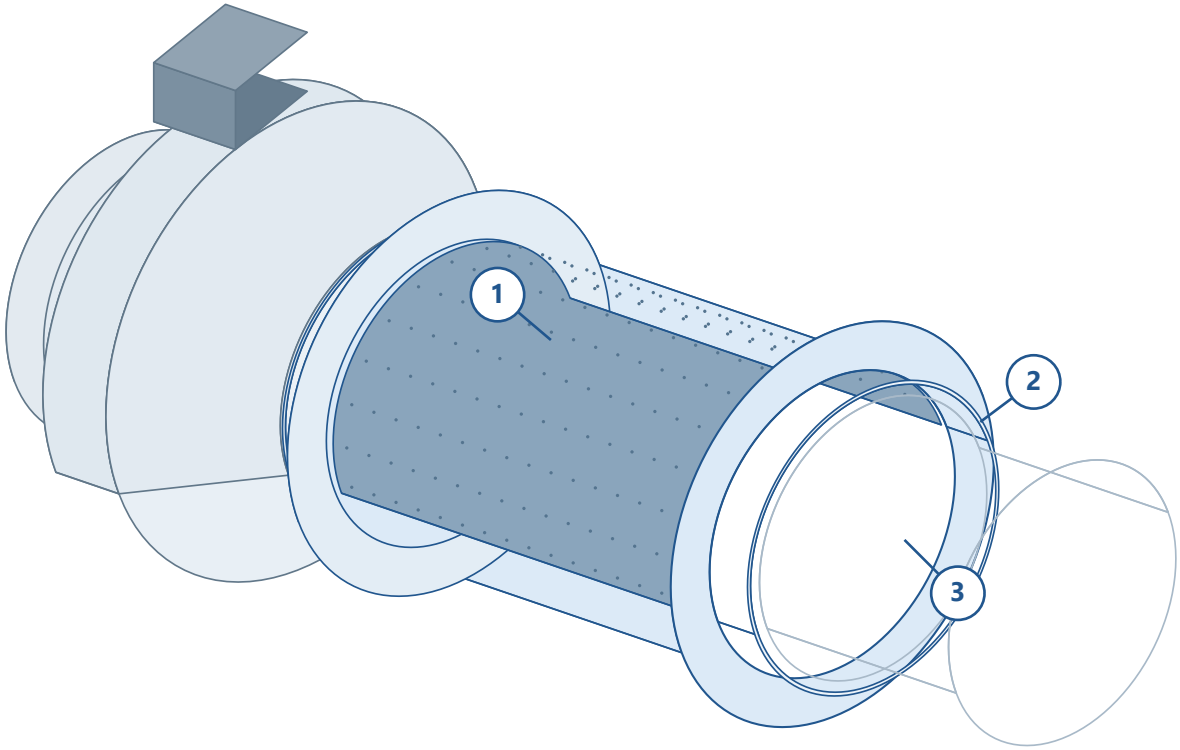


### 01 / Silencer body

Shown in a circular duct assembly. Coordinate the listed length, joint and service space.

### 02 / Mating interface

Confirm spigot/joint geometry, outside casing envelope and the specified seal.

### 03 / Acoustic air passage

Confirm lining construction and the selected acoustic data; perforation spacing is illustrative.



### SUPPORT & SERVICE

The pictured fan is an application example, not an exclusive model match. Confirm the selected fan/silencer interface, duty, support and service access.

Not to scale. No dimensional, acoustic or operating classification is inferred from the illustration.

VRIS / SIZE SCHEDULE

# VRIS

Rectangular inline silencer



A rectangular duct silencer with an illustrated splitter arrangement. Select nominal width and height together with the required acoustic duty.

**70 listed sizes**

| H / W | 200 | 300 | 400 | 500 | 600 | 700 | 800 |
|---|---|---|---|---|---|---|---|
| 200 | • | • | • | • | • | • | • |
| 300 | • | • | • | • | • | • | • |
| 400 | • | • | • | • | • | • | • |
| 500 | • | • | • | • | • | • | • |
| 600 | • | • | • | • | • | • | • |
| 700 | • | • | • | • | • | • | • |
| 800 | • | • | • | • | • | • | • |
| 900 | • | • | • | • | • | • | • |
| 1000 | • | • | • | • | • | • | • |
| 1120 | • | • | • | • | • | • | • |

All dimensions in mm. • = listed nominal W × H combination. Listed L = 500 mm.

The listed length is 500 mm. Splitter thickness, quantity, spacing, clear air area and pressure loss require the offered product selection.

VRIS / INSTALLATION INTERFACE

# Rectangular installation example

Illustrative arrangement only. Other compatible fan models may be used after connection and duty checks.

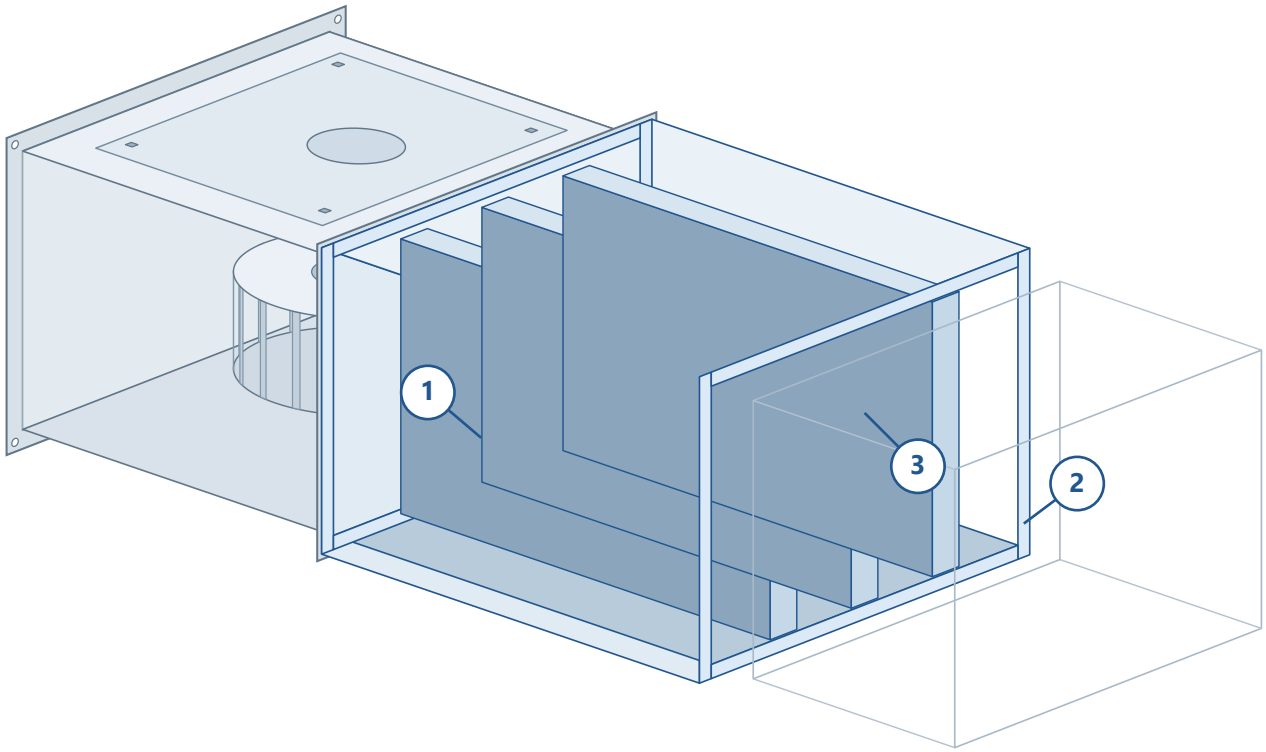


### 01 / Silencer body

Shown in a rectangular duct assembly. Coordinate nominal W x H and the listed 500 mm length.

### 02 / Mating interface

Match the actual frame/flange dimensions and connection detail without distorting the casing.

### 03 / Acoustic air passage

The splitter layout is illustrative. Select quantity, spacing and clear passage for the duty.

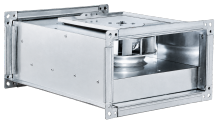

### SUPPORT & SERVICE

The pictured fan is an application example, not an exclusive model match. Confirm the selected fan/silencer interface, duty, support and service access.

Not to scale. No dimensional, acoustic or operating classification is inferred from the illustration.

03 / ACOUSTIC SELECTION

# Select by spectrum and airflow.

Use the offered product data for the actual duty; nominal size and length do not establish acoustic performance.

**01**

**Sound before**

Fan/system sound spectrum at the required operating point.

→

**02**

**Silencer selection**

Insertion loss, pressure loss and flow-generated sound.

→

**03**

**Sound after**

Resulting sound spectrum checked against the project target.

| Selection input | Include in the acoustic assessment |
|---|---|
| **Sound spectrum** | Frequency-band sound power before the silencer and the downstream target. |
| **Insertion loss** | Selected product data by frequency band, matching the offered construction and length. |
| **Pressure loss** | Selected duty airflow and silencer resistance, including the installation arrangement. |
| **Flow-generated sound** | Account for sound generated by airflow through the selected silencer. |

No numerical insertion loss, pressure-drop curve or sound rating is assigned in this issue. Obtain the selected product acoustic data before confirming the duty.

04 / PROJECT SCHEDULE

# Release the complete selection.

Combine the nominal schedule with the actual acoustic and installation documentation.

| Series | Dimension record | Still required for release |
|---|---|---|
| **VAXS** | Listed nominal Ø | Selected L; envelope; flange/fixing drawing; acoustic and pressure data. |
| **VCIS** | Listed nominal Ø and L | Outside casing size; joint detail; acoustic and pressure data. |
| **VRIS** | Listed nominal W × H and L | Frame envelope; splitter arrangement; clear air area; acoustic and pressure data. |

## FOR EVERY OFFERED SILENCER

Record the exact unit, size, length, airflow, acoustic target and pressure allowance. Include material/lining specification, operating environment, mass, support, access and maintenance documentation for the offered construction.

Illustrations show installation examples, not a restricted list of compatible fan models. Confirm the selected connection, acoustic duty and operating requirements for each assembly.

English catalogue review issue. Document approval and engineering validation of acoustic performance and installation are separate.

VOLTVENT®
VENTILATION SYSTEMS

04 / VENTILATION ACCESSORIES

# Grilles & Diffusers

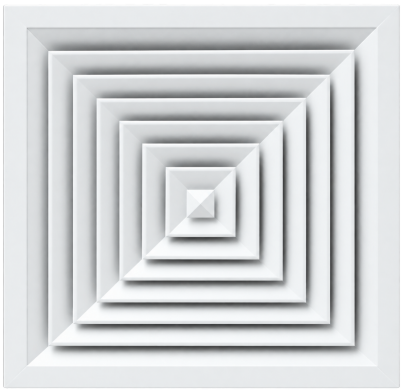

VCD-S



VCD-R



VPDV

Deliver and transfer air to the space.

VPDV / VCD-S / VCD-R / VDDG / VSDG / VLG / VDTG / VLSD / VLG-H / VAWL

01 / PRODUCT INDEX

# Ten series. One coordinated range.

Find the terminal format, then coordinate the nominal size, installation interface and selected air duty.



## VPDV

Plastic disc valve

062 / 063



## VLG

Linear grille

072 / 073



## VCD-S

Square ceiling diffuser

064 / 065

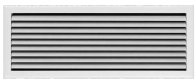

## VDTG

Door transfer grille

074 / 075



## VCD-R

Round ceiling diffuser

066 / 067



## VLSD

Linear slot diffuser

076 / 077

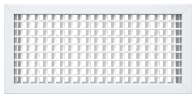

## VDDG

Double deflection grille

068 / 069

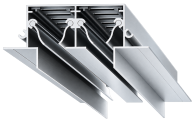

## VLG-H

Hidden linear slot diffuser

078 / 079



## VSDG

Single deflection grille

070 / 071

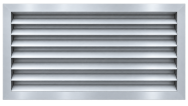

## VAWL

Weather louvre

080 / 081

Listed pages: size schedule / installation example. Product illustrations identify format and interfaces; they do not restrict compatibility to named fan models.

02 / SELECTION OVERVIEW

# Start with the air path.

Select the terminal function and architectural interface before choosing the final size and operating point.

| Air path | Terminal series | Coordinate |
|---|---|---|
| **Ceiling distribution** | VCD-S / VCD-R | Neck, face, ceiling opening and selected air pattern. |
| **Circular terminal** | VPDV | Duct diameter, disc setting and room duty. |
| **Grille opening** | VDDG / VSDG / VLG | Blade arrangement, frame, opening and access. |
| **Transfer air** | VDTG | Pressure relationship, door construction and clear air path. |
| **Linear ceiling line** | VLSD / VLG-H | Slot count, length, ceiling detail and plenum. |
| **Exterior opening** | VAWL | Air duty, facade joint, drainage, support and weather evidence. |

Nominal neck sizes are selection references. They are not outside face sizes, finished opening dimensions, free areas or airflow ratings. Use the offered product drawing and performance data for the selected duty.

Application views are dimensionless installation examples. Confirm the actual assembly; no exclusive fan-model match is implied.

VPDV / SIZE SCHEDULE

# VPDV

Plastic disc valve



Nominal connection key / not to scale

A compact circular terminal with a central disc and an annular air passage. Coordinate the selected air duty with the duct connection and accessible face.

## 4 listed nominal options



Nominal neck Ø

| Code | Nominal neck Ø / mm |
|---|---|
| **VPDV** | 100 |
| **VPDV** | 125 |
| **VPDV** | 150 |
| **VPDV** | 200 |

Nominal duct connection diameter is listed. Confirm the outside face diameter, neck engagement and disc setting for the selected unit.

VPDV / INSTALLATION EXAMPLE

# Ceiling terminal example

Illustrative arrangement only. Coordinate the selected terminal, connection and installation requirements.

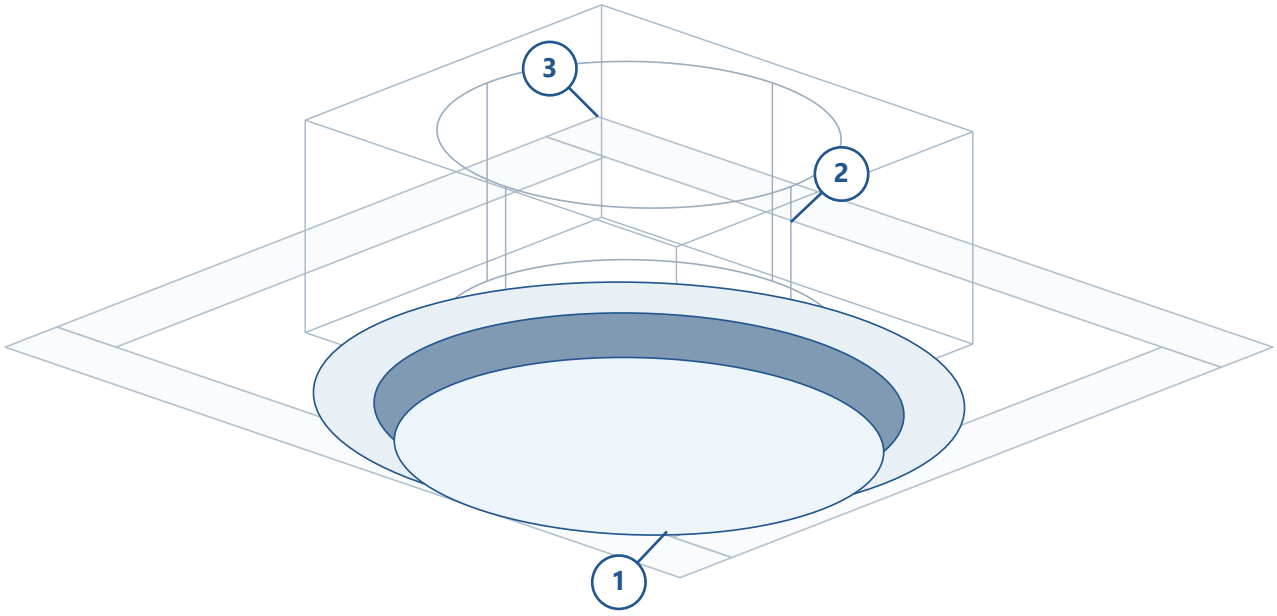


### 01 / Disc and annular passage

Keep the visible air passage clear. Set and check the selected terminal during commissioning.

### 02 / Circular connection

Coordinate the mating duct or mounting ring with the actual neck and fixing detail.

### 03 / Ceiling junction

Confirm the opening, ceiling finish and access for removal and cleaning.



### INTERFACE & SERVICE

Confirm the offered fixing, sealing and access arrangement. Supporting construction is installation context and is selected separately from the visible terminal.

Not to scale. The illustration does not establish manufacturing dimensions, airflow, sound or classification.

VCD-S / SIZE SCHEDULE

# VCD-S

Square ceiling diffuser

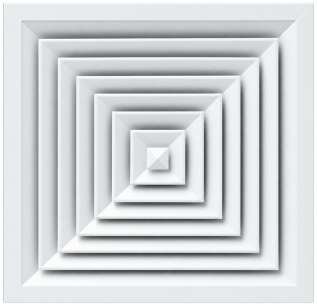

A square terminal face with concentric blade elements for ceiling air distribution. Coordinate the selected airflow pattern with the room layout and ceiling system.

## 6 listed nominal options

Nominal connection key / not to scale

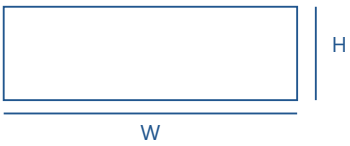


| Code | Nominal neck W / mm | Nominal neck H / mm |
|---|---|---|
| **VCD-S** | 150 | 150 |
| **VCD-S** | 225 | 225 |
| **VCD-S** | 300 | 300 |
| **VCD-S** | 375 | 375 |
| **VCD-S** | 450 | 450 |
| **VCD-S** | 525 | 525 |

The listed W x H describes the square neck, not the outside face or ceiling cut-out. Confirm the frame and plenum connection.

VCD-S / INSTALLATION EXAMPLE

# Square ceiling installation

Illustrative arrangement only. Coordinate the selected terminal, connection and installation requirements.

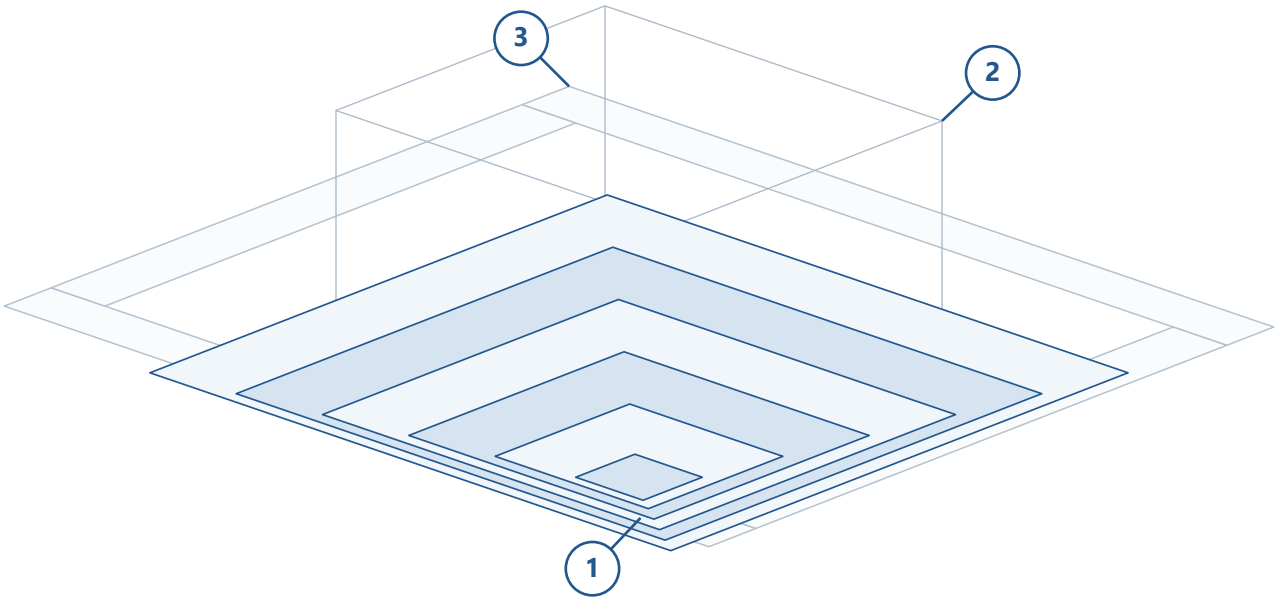


### 01 / Concentric face

The square face is shown with its concentric elements. Confirm the selected air pattern and access.

### 02 / Neck and plenum

Coordinate the nominal square neck with the selected plenum or duct connection.

### 03 / Ceiling interface

Support the selected assembly independently as required; coordinate the ceiling opening and finish.



### INTERFACE & SERVICE

Confirm the offered fixing, sealing and access arrangement. Supporting construction is installation context and is selected separately from the visible terminal.

Not to scale. The illustration does not establish manufacturing dimensions, airflow, sound or classification.

VCD-R / SIZE SCHEDULE

# VCD-R

Round ceiling diffuser



Nominal connection key / not to scale

A circular terminal with concentric face elements for room air distribution. Select the duty and installation arrangement together with the ceiling or exposed duct route.

**10 listed nominal options**



Nominal neck Ø

| Code | Nominal neck Ø / mm |
|---|---|
| **VCD-R** | 100 |
| **VCD-R** | 150 |
| **VCD-R** | 200 |
| **VCD-R** | 250 |
| **VCD-R** | 300 |
| **VCD-R** | 350 |
| **VCD-R** | 400 |
| **VCD-R** | 450 |
| **VCD-R** | 500 |
| **VCD-R** | 550 |

Nominal neck diameter is listed. Face diameter, cone arrangement, neck depth and fixing details require the selected drawing.

VCD-R / INSTALLATION EXAMPLE

# Circular ceiling installation

Illustrative arrangement only. Coordinate the selected terminal, connection and installation requirements.

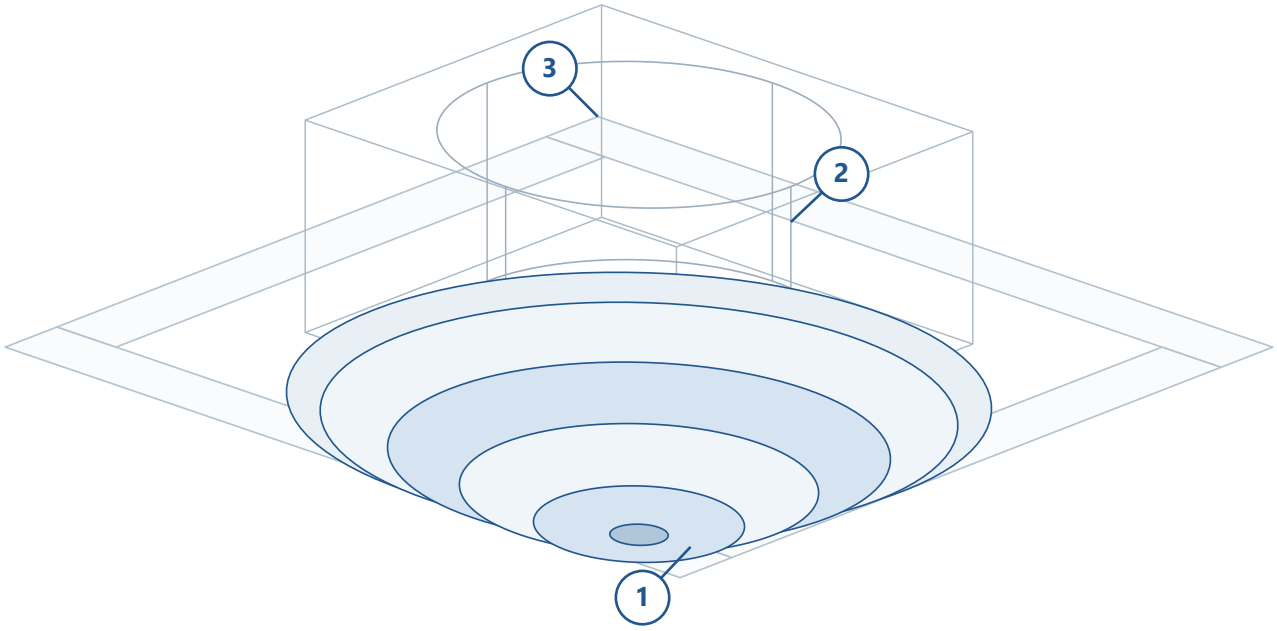


### 01 / Concentric face

Keep the discharge passages clear and accessible for inspection and cleaning.

### 02 / Duct connection

Match the actual neck geometry and joint. Coordinate any separately selected plenum.

### 03 / Surrounding ceiling

The ceiling is shown as context. Confirm the finished opening and the selected support arrangement.



### INTERFACE & SERVICE

Confirm the offered fixing, sealing and access arrangement. Supporting construction is installation context and is selected separately from the visible terminal.

Not to scale. The illustration does not establish manufacturing dimensions, airflow, sound or classification.

VDDG / SIZE SCHEDULE

# VDDG

Double deflection grille

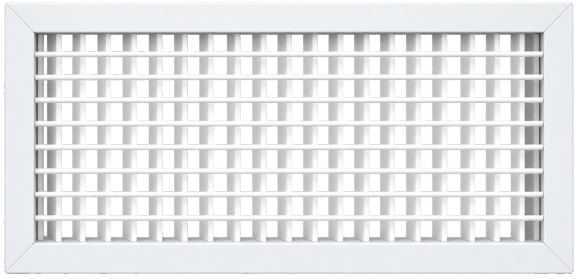

A rectangular grille with two blade rows for air-direction control. Coordinate blade orientation and adjustment access with the supply route and occupied space.

## 209 listed nominal options

Nominal connection key / not to scale

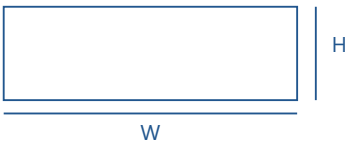


| W / H | 100 | 150 | 200 | 250 | 300 | 350 | 400 | 450 | 500 | 550 | 600 |
|---|---|---|---|---|---|---|---|---|---|---|---|
| 100 | • | • | • | • | • | • | • | • | • | • | • |
| 150 | • | • | • | • | • | • | • | • | • | • | • |
| 200 | • | • | • | • | • | • | • | • | • | • | • |
| 250 | • | • | • | • | • | • | • | • | • | • | • |
| 300 | • | • | • | • | • | • | • | • | • | • | • |
| 350 | • | • | • | • | • | • | • | • | • | • | • |
| 400 | • | • | • | • | • | • | • | • | • | • | • |
| 450 | • | • | • | • | • | • | • | • | • | • | • |
| 500 | • | • | • | • | • | • | • | • | • | • | • |
| 550 | • | • | • | • | • | • | • | • | • | • | • |
| 600 | • | • | • | • | • | • | • | • | • | • | • |
| 650 | • | • | • | • | • | • | • | • | • | • | • |
| 700 | • | • | • | • | • | • | • | • | • | • | • |
| 750 | • | • | • | • | • | • | • | • | • | • | • |
| 800 | • | • | • | • | • | • | • | • | • | • | • |
| 850 | • | • | • | • | • | • | • | • | • | • | • |
| 900 | • | • | • | • | • | • | • | • | • | • | • |
| 950 | • | • | • | • | • | • | • | • | • | • | • |
| 1000 | • | • | • | • | • | • | • | • | • | • | • |

All dimensions in mm. • = listed nominal neck W x H combination.

Nominal neck W x H is listed. Outside frame, core depth, blade spacing and any separately selected damper require confirmation.

VDDG / INSTALLATION EXAMPLE

# Wall grille installation

Illustrative arrangement only. Coordinate the selected terminal, connection and installation requirements.

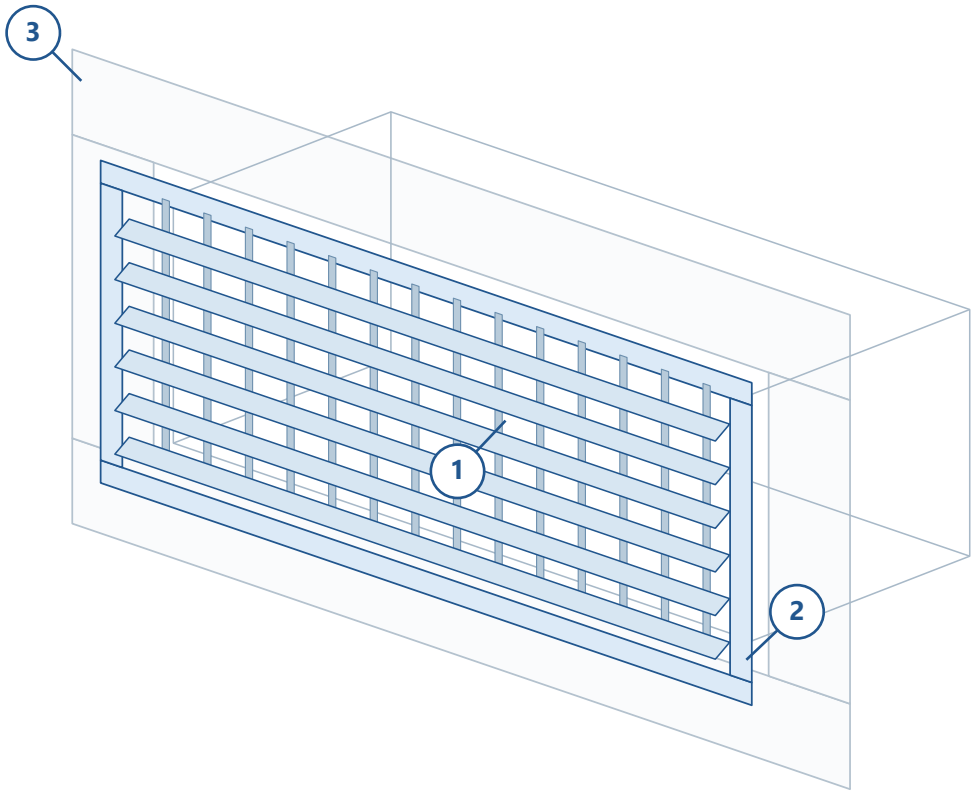


### 01 / Two blade rows

The illustrated rows show direction control in two planes. Confirm the actual blade setting.

### 02 / Grille-to-opening joint

Coordinate the nominal neck, subframe or fixing method, sealing and removable-face access.

### 03 / Duct and wall context

Keep the duct connection and support clear of blade travel. The surrounding wall is schematic.

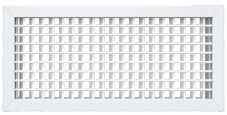

### INTERFACE & SERVICE

Confirm the offered fixing, sealing and access arrangement. Supporting construction is installation context and is selected separately from the visible terminal.

Not to scale. The illustration does not establish manufacturing dimensions, airflow, sound or classification.

VSDG / SIZE SCHEDULE

# VSDG

Single deflection grille

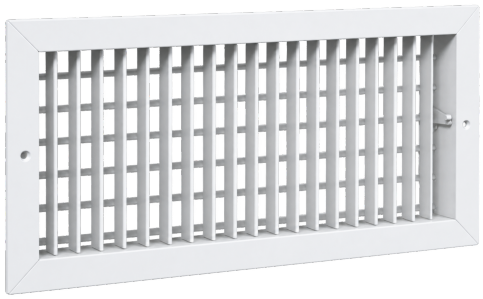

A rectangular terminal with one visible blade row. Coordinate the selected airflow direction and the supply or return arrangement with the room and duct layout.

## 209 listed nominal options

Nominal connection key / not to scale

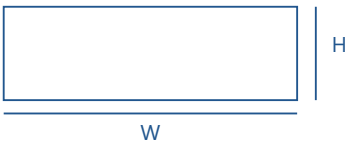


| W / H | 100 | 150 | 200 | 250 | 300 | 350 | 400 | 450 | 500 | 550 | 600 |
|---|---|---|---|---|---|---|---|---|---|---|---|
| 100 | • | • | • | • | • | • | • | • | • | • | • |
| 150 | • | • | • | • | • | • | • | • | • | • | • |
| 200 | • | • | • | • | • | • | • | • | • | • | • |
| 250 | • | • | • | • | • | • | • | • | • | • | • |
| 300 | • | • | • | • | • | • | • | • | • | • | • |
| 350 | • | • | • | • | • | • | • | • | • | • | • |
| 400 | • | • | • | • | • | • | • | • | • | • | • |
| 450 | • | • | • | • | • | • | • | • | • | • | • |
| 500 | • | • | • | • | • | • | • | • | • | • | • |
| 550 | • | • | • | • | • | • | • | • | • | • | • |
| 600 | • | • | • | • | • | • | • | • | • | • | • |
| 650 | • | • | • | • | • | • | • | • | • | • | • |
| 700 | • | • | • | • | • | • | • | • | • | • | • |
| 750 | • | • | • | • | • | • | • | • | • | • | • |
| 800 | • | • | • | • | • | • | • | • | • | • | • |
| 850 | • | • | • | • | • | • | • | • | • | • | • |
| 900 | • | • | • | • | • | • | • | • | • | • | • |
| 950 | • | • | • | • | • | • | • | • | • | • | • |
| 1000 | • | • | • | • | • | • | • | • | • | • | • |

All dimensions in mm. • = listed nominal neck W x H combination.

Nominal neck W x H is listed. Confirm the actual frame, blade orientation, fixing and any required air-volume control separately.

VSDG / INSTALLATION EXAMPLE

# Single-row grille installation

Illustrative arrangement only. Coordinate the selected terminal, connection and installation requirements.

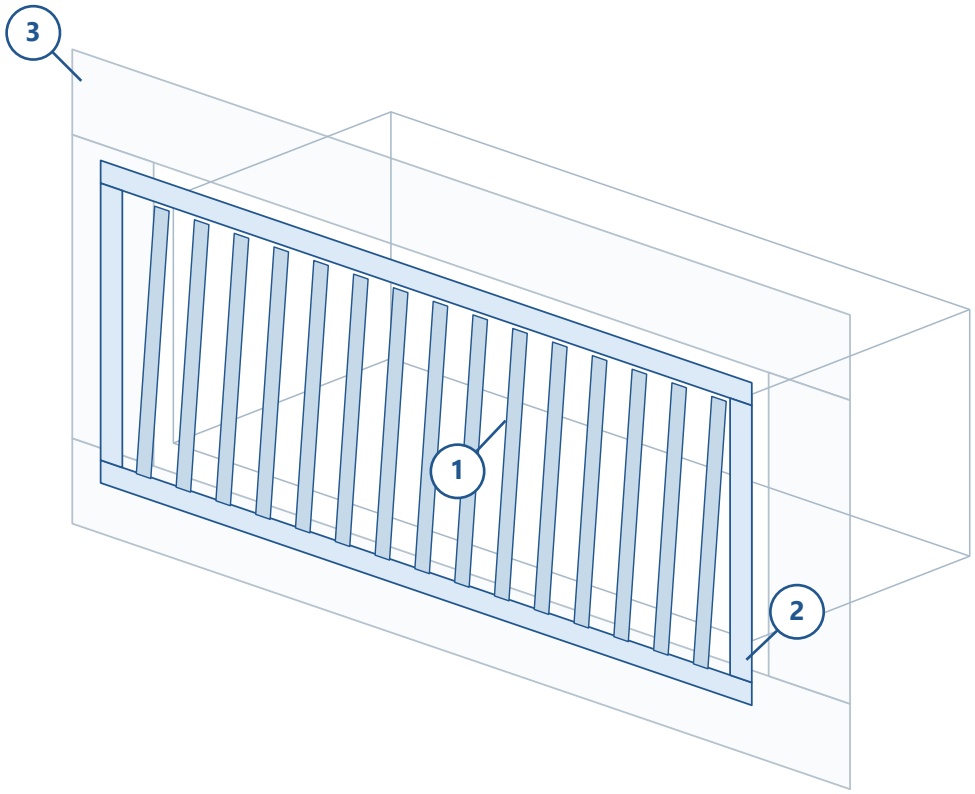


### 01 / Single blade row

The visible blade row is shown in the selected product direction. Coordinate access and setting.

### 02 / Frame interface

Confirm neck size, frame envelope, sealing and the offered fixing arrangement.

### 03 / Duct and wall context

Coordinate duct support and the wall opening. Blade direction alone does not define airflow volume.



### INTERFACE & SERVICE

Confirm the offered fixing, sealing and access arrangement. Supporting construction is installation context and is selected separately from the visible terminal.

Not to scale. The illustration does not establish manufacturing dimensions, airflow, sound or classification.

VLG / SIZE SCHEDULE

# VLG

Linear grille



A linear bar face for integration into architectural ventilation openings. Coordinate the air route and blade orientation with the surrounding wall or ceiling finish.

## 228 listed nominal options

Nominal connection key / not to scale

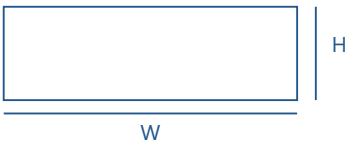


| W / H | 75 | 100 | 150 | 200 | 250 | 300 | 350 | 400 | 450 | 500 | 550 | 600 |
|---|---|---|---|---|---|---|---|---|---|---|---|---|
| 150 | • | • | • | • | • | • | • | • | • | • | • | • |
| 200 | • | • | • | • | • | • | • | • | • | • | • | • |
| 250 | • | • | • | • | • | • | • | • | • | • | • | • |
| 300 | • | • | • | • | • | • | • | • | • | • | • | • |
| 350 | • | • | • | • | • | • | • | • | • | • | • | • |
| 400 | • | • | • | • | • | • | • | • | • | • | • | • |
| 450 | • | • | • | • | • | • | • | • | • | • | • | • |
| 500 | • | • | • | • | • | • | • | • | • | • | • | • |
| 550 | • | • | • | • | • | • | • | • | • | • | • | • |
| 600 | • | • | • | • | • | • | • | • | • | • | • | • |
| 700 | • | • | • | • | • | • | • | • | • | • | • | • |
| 800 | • | • | • | • | • | • | • | • | • | • | • | • |
| 900 | • | • | • | • | • | • | • | • | • | • | • | • |
| 1000 | • | • | • | • | • | • | • | • | • | • | • | • |
| 1200 | • | • | • | • | • | • | • | • | • | • | • | • |
| 1400 | • | • | • | • | • | • | • | • | • | • | • | • |
| 1600 | • | • | • | • | • | • | • | • | • | • | • | • |
| 1800 | • | • | • | • | • | • | • | • | • | • | • | • |
| 2000 | • | • | • | • | • | • | • | • | • | • | • | • |

All dimensions in mm. • = listed nominal neck W x H combination.

Nominal neck W x H is listed. Overall frame dimensions, bar pitch, end treatment and any continuous-run joint are selected separately.

VLG / INSTALLATION EXAMPLE

# Linear grille installation

Illustrative arrangement only. Coordinate the selected terminal, connection and installation requirements.

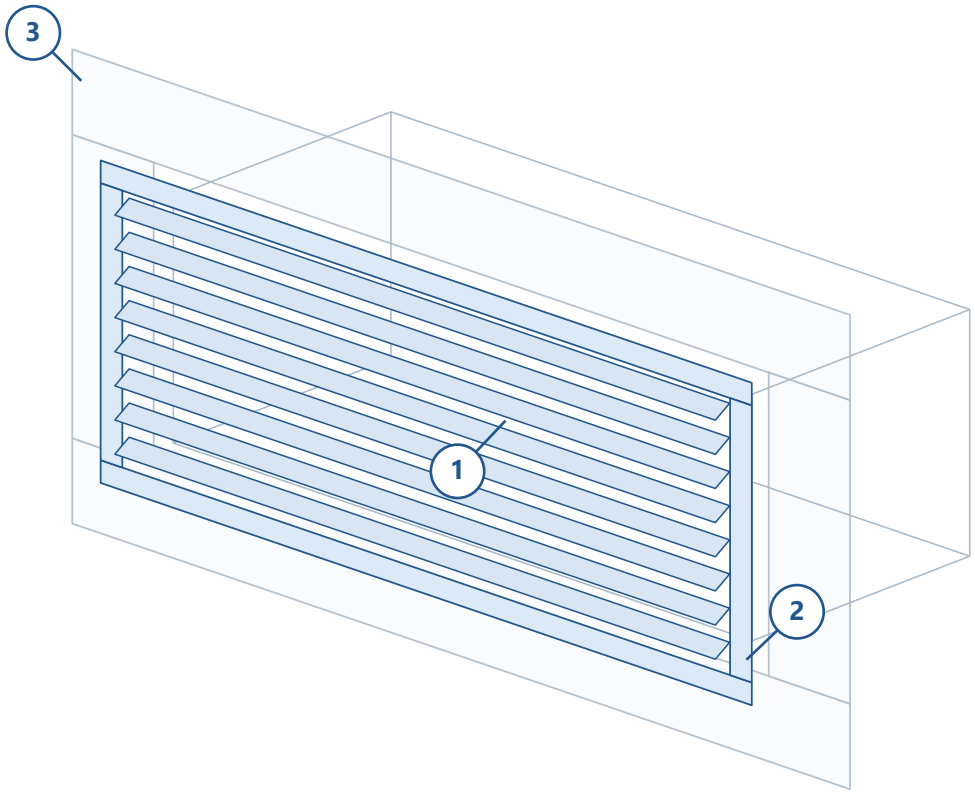


### 01 / Linear bar face

Preserve the visible bar alignment with the architectural layout and the selected air duty.

### 02 / Frame and opening

Coordinate the nominal opening, actual fixing method and access for cleaning.

### 03 / Air route behind grille

Match any plenum, transition and duct connection to the selected grille assembly.



### INTERFACE & SERVICE

Confirm the offered fixing, sealing and access arrangement. Supporting construction is installation context and is selected separately from the visible terminal.

Not to scale. The illustration does not establish manufacturing dimensions, airflow, sound or classification.

VDTG / SIZE SCHEDULE

# VDTG

Door transfer grille

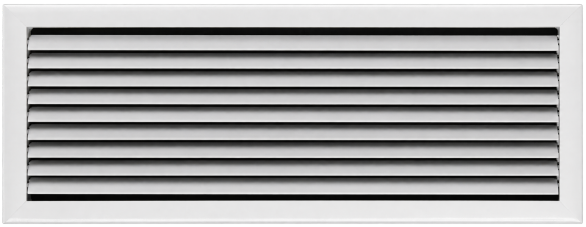

A terminal for the transfer-air path between adjacent spaces. Coordinate the required pressure relationship and the actual door or partition construction.

## 285 listed nominal options

Nominal connection key / not to scale

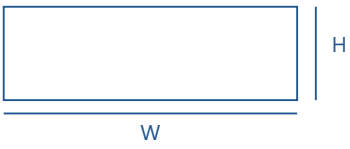


| W / H | 100 | 150 | 200 | 250 | 300 | 350 | 400 | 450 | 500 | 550 | 600 | 650 | 700 | 750 | 800 |
|---|---|---|---|---|---|---|---|---|---|---|---|---|---|---|---|
| 200 | • | • | • | • | • | • | • | • | • | • | • | • | • | • | • |
| 250 | • | • | • | • | • | • | • | • | • | • | • | • | • | • | • |
| 300 | • | • | • | • | • | • | • | • | • | • | • | • | • | • | • |
| 350 | • | • | • | • | • | • | • | • | • | • | • | • | • | • | • |
| 400 | • | • | • | • | • | • | • | • | • | • | • | • | • | • | • |
| 450 | • | • | • | • | • | • | • | • | • | • | • | • | • | • | • |
| 500 | • | • | • | • | • | • | • | • | • | • | • | • | • | • | • |
| 550 | • | • | • | • | • | • | • | • | • | • | • | • | • | • | • |
| 600 | • | • | • | • | • | • | • | • | • | • | • | • | • | • | • |
| 650 | • | • | • | • | • | • | • | • | • | • | • | • | • | • | • |
| 700 | • | • | • | • | • | • | • | • | • | • | • | • | • | • | • |
| 750 | • | • | • | • | • | • | • | • | • | • | • | • | • | • | • |
| 800 | • | • | • | • | • | • | • | • | • | • | • | • | • | • | • |
| 850 | • | • | • | • | • | • | • | • | • | • | • | • | • | • | • |
| 900 | • | • | • | • | • | • | • | • | • | • | • | • | • | • | • |
| 950 | • | • | • | • | • | • | • | • | • | • | • | • | • | • | • |
| 1000 | • | • | • | • | • | • | • | • | • | • | • | • | • | • | • |
| 1100 | • | • | • | • | • | • | • | • | • | • | • | • | • | • | • |
| 1200 | • | • | • | • | • | • | • | • | • | • | • | • | • | • | • |

All dimensions in mm. • = listed nominal neck W x H combination.

Nominal neck W x H is listed. Door cut-out, frame overlap, opposing face and permitted panel thickness require the selected drawing.

VDTG / INSTALLATION EXAMPLE

# Door transfer installation

Illustrative arrangement only. Coordinate the selected terminal, connection and installation requirements.

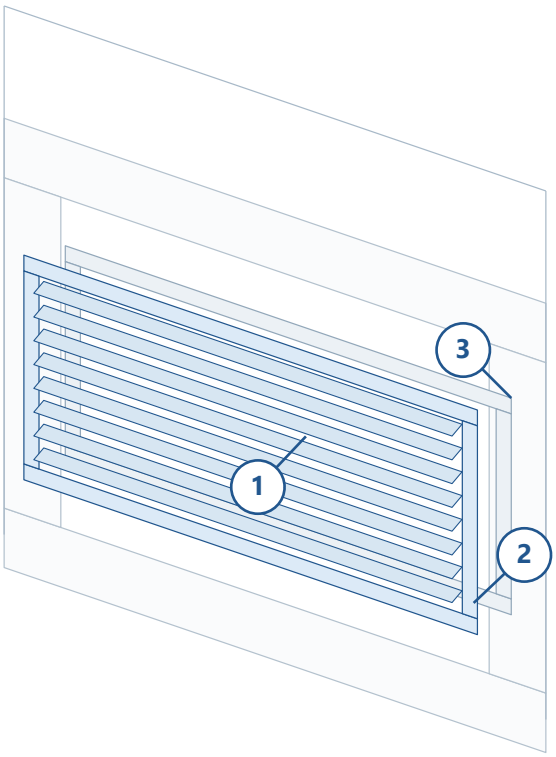


### 01 / Transfer-air face

Keep both faces free of obstruction and coordinate the transfer-air duty with room pressure requirements.

### 02 / Frame and door opening

Confirm the cut-out and fixing with the actual door construction and available frame overlap.

### 03 / Opposing-side interface

Coordinate the complete frame set and access. No fire, smoke or acoustic rating is inferred from this view.

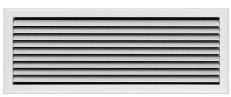

### INTERFACE & SERVICE

Confirm the offered fixing, sealing and access arrangement. Supporting construction is installation context and is selected separately from the visible terminal.

Not to scale. The illustration does not establish manufacturing dimensions, airflow, sound or classification.

VLSD / SIZE SCHEDULE

# VLSD

Linear slot diffuser



A linear air terminal with a visible slot face for integration into a ceiling line. Coordinate the number of slots and the selected air pattern with the room duty.

## 4 listed nominal options

Nominal connection key / not to scale



Nominal L / slot count selected

| Code | Slots | Nominal L / mm |
|---|---|---|
| **VLSD** | 1 | 1000 |
| **VLSD** | 2 | 1000 |
| **VLSD** | 3 | 1000 |
| **VLSD** | 4 | 1000 |

The schedule lists 1 to 4 slots at a nominal length of 1000 mm. Slot width, total face width, end caps and plenum dimensions are selected separately.

VLSD / INSTALLATION EXAMPLE

# Linear slot ceiling installation

Illustrative arrangement only. Coordinate the selected terminal, connection and installation requirements.

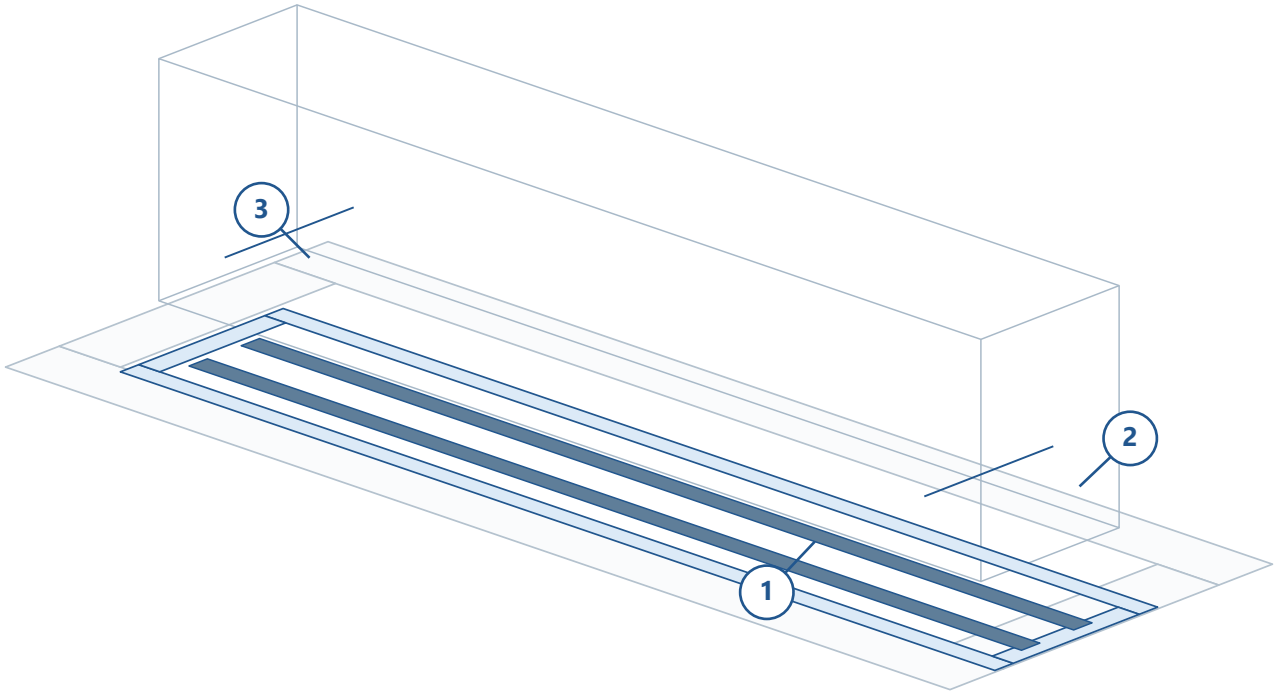


### 01 / Visible slot line

Two slots are illustrated as an example. Select the slot count and air pattern for the project.

### 02 / Plenum interface

Coordinate the terminal-to-plenum joint, support and any selected adjustment mechanism.

### 03 / Ceiling opening

Match the finished ceiling line, access and end treatment; do not carry duct loads on the decorative face.

### INTERFACE & SERVICE

Confirm the offered fixing, sealing and access arrangement. Supporting construction is installation context and is selected separately from the visible terminal.

Not to scale. The illustration does not establish manufacturing dimensions, airflow, sound or classification.

VLG-H / SIZE SCHEDULE

# VLG-H

Hidden linear slot diffuser

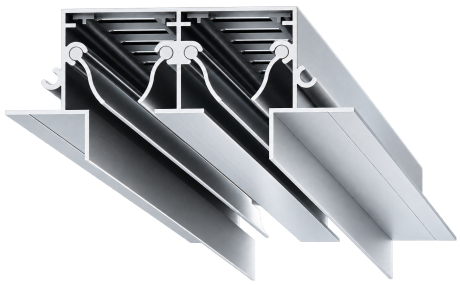

Nominal connection key / not to scale

A concealed-frame terminal for a fine slot line within the finished ceiling. Coordinate the hidden frame, slot count and air route with the ceiling build-up.

## 4 listed nominal options



Nominal L / slot count selected

| Code | Slots | Nominal L / mm |
|---|---|---|
| **VLG-H** | 1 | 1000 |
| **VLG-H** | 2 | 1000 |
| **VLG-H** | 3 | 1000 |
| **VLG-H** | 4 | 1000 |

The schedule lists 1 to 4 slots at a nominal length of 1000 mm. Confirm the actual profile, slot width, ceiling build-up and mounting detail.

VLG-H / INSTALLATION EXAMPLE

# Concealed slot ceiling installation

Illustrative arrangement only. Coordinate the selected terminal, connection and installation requirements.

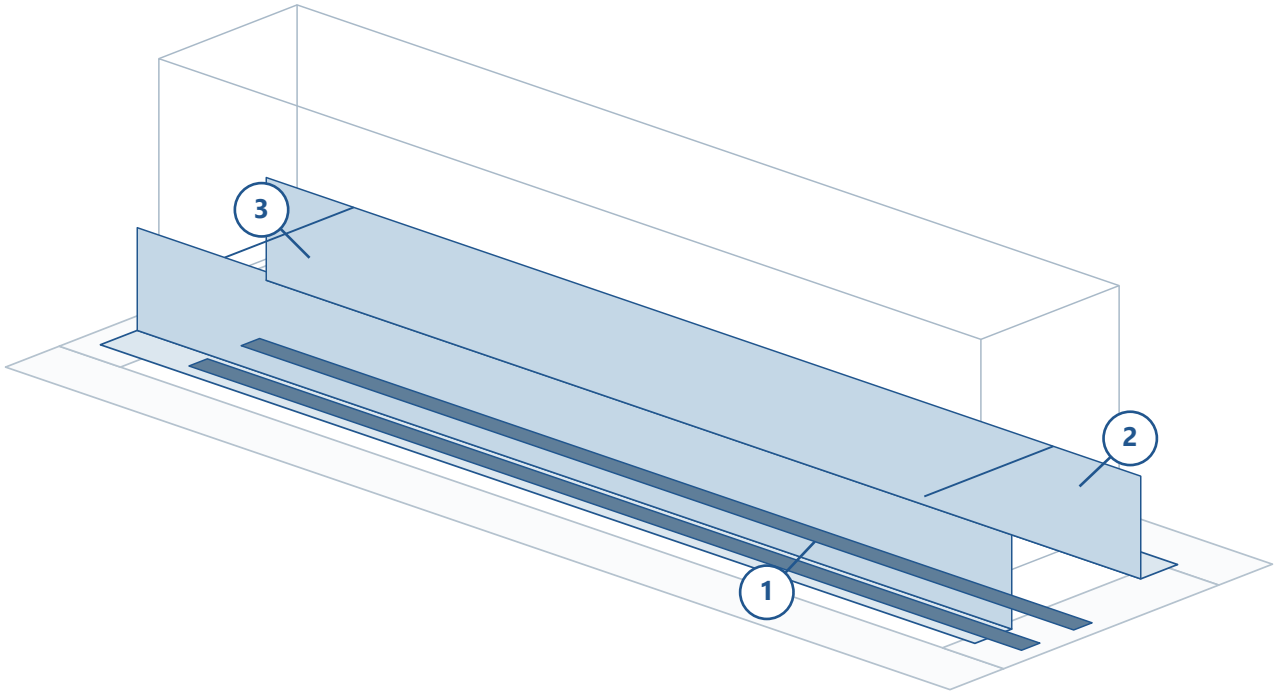


### 01 / Concealed slot face

The air passage remains visible at the ceiling line while the frame integrates into the surrounding finish.

### 02 / Hidden frame junction

The cutaway illustrates the hidden interface only. Confirm profile engagement and the offered fixing detail.

### 03 / Ceiling and plenum

Coordinate independent plenum support, ceiling finish and service access before closing the ceiling.

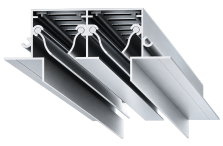

### INTERFACE & SERVICE

Confirm the offered fixing, sealing and access arrangement. Supporting construction is installation context and is selected separately from the visible terminal.

Not to scale. The illustration does not establish manufacturing dimensions, airflow, sound or classification.

VAWL / SIZE SCHEDULE

# VAWL

Weather louvre

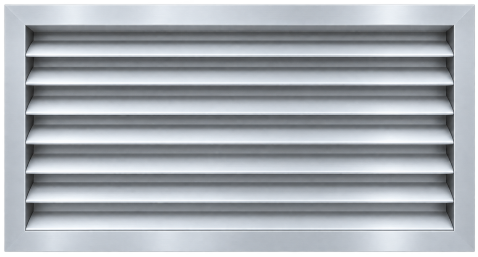

An exterior terminal for an intake or discharge opening. Coordinate the blade orientation, facade junction and drainage route with the selected ventilation duty.

**289 listed nominal options**

Nominal connection key / not to scale

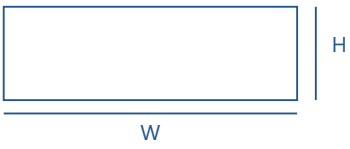


| W / H | 200 | 300 | 400 | 500 | 600 | 700 | 800 | 900 | 1000 | 1100 | 1200 | 1400 | 1600 | 1800 | 2000 | 2200 | 2500 |
|---|---|---|---|---|---|---|---|---|---|---|---|---|---|---|---|---|---|
| 200 | • | • | • | • | • | • | • | • | • | • | • | • | • | • | • | • | • |
| 300 | • | • | • | • | • | • | • | • | • | • | • | • | • | • | • | • | • |
| 400 | • | • | • | • | • | • | • | • | • | • | • | • | • | • | • | • | • |
| 500 | • | • | • | • | • | • | • | • | • | • | • | • | • | • | • | • | • |
| 600 | • | • | • | • | • | • | • | • | • | • | • | • | • | • | • | • | • |
| 700 | • | • | • | • | • | • | • | • | • | • | • | • | • | • | • | • | • |
| 800 | • | • | • | • | • | • | • | • | • | • | • | • | • | • | • | • | • |
| 900 | • | • | • | • | • | • | • | • | • | • | • | • | • | • | • | • | • |
| 1000 | • | • | • | • | • | • | • | • | • | • | • | • | • | • | • | • | • |
| 1100 | • | • | • | • | • | • | • | • | • | • | • | • | • | • | • | • | • |
| 1200 | • | • | • | • | • | • | • | • | • | • | • | • | • | • | • | • | • |
| 1400 | • | • | • | • | • | • | • | • | • | • | • | • | • | • | • | • | • |
| 1600 | • | • | • | • | • | • | • | • | • | • | • | • | • | • | • | • | • |
| 1800 | • | • | • | • | • | • | • | • | • | • | • | • | • | • | • | • | • |
| 2000 | • | • | • | • | • | • | • | • | • | • | • | • | • | • | • | • | • |
| 2200 | • | • | • | • | • | • | • | • | • | • | • | • | • | • | • | • | • |
| 2500 | • | • | • | • | • | • | • | • | • | • | • | • | • | • | • | • | • |

All dimensions in mm. • = listed nominal neck W x H combination.

Nominal neck W x H is listed. Confirm outside frame, depth, sectioning, screen and the selected weather-performance evidence.

VAWL / INSTALLATION EXAMPLE

# External wall installation

Illustrative arrangement only. Coordinate the selected terminal, connection and installation requirements.

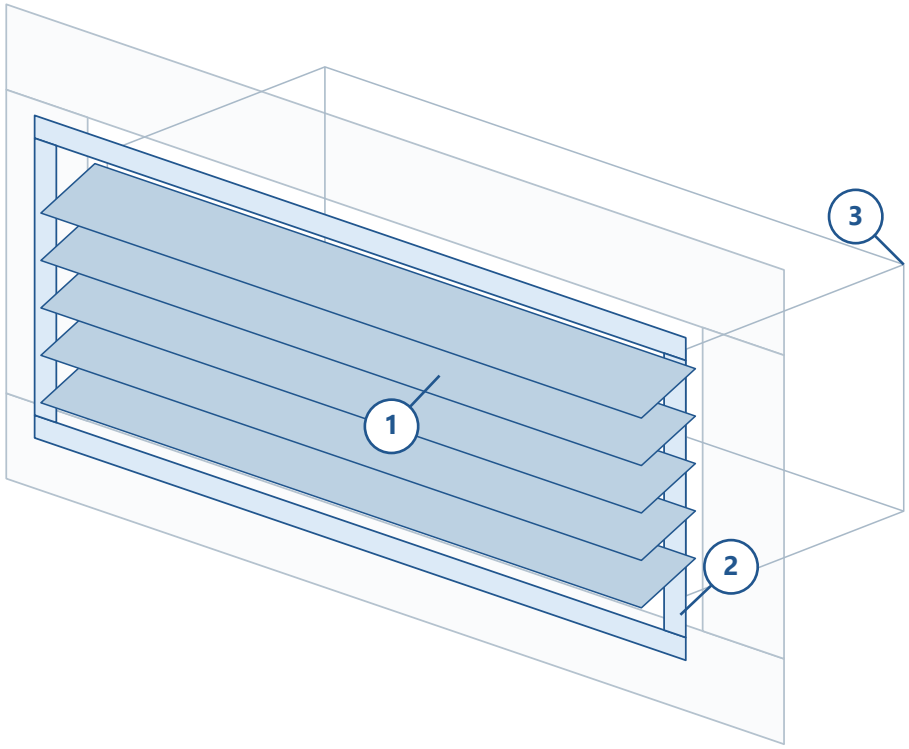


### 01 / Weather louvre blades

Coordinate blade orientation and drainage. The drawing does not establish a water-penetration rating.

### 02 / Facade connection

Confirm the frame, sealing and fixing details for the actual facade construction.

### 03 / Air route and support

Coordinate duct or plenum support, access and any selected screen. Keep the drainage path unobstructed.



### INTERFACE & SERVICE

Confirm the offered fixing, sealing and access arrangement. Supporting construction is installation context and is selected separately from the visible terminal.

Not to scale. The illustration does not establish manufacturing dimensions, airflow, sound or classification.

03 / AIR-SIDE SELECTION

# Size and duty are different inputs.

Use the selected terminal performance data; nominal dimensions alone do not establish flow, pressure loss or room comfort.

| Selection input | Include in the project assessment |
|---|---|
| **Airflow and pressure** | Design supply, extract or transfer flow; available pressure; selected terminal resistance. |
| **Room air distribution** | Selected discharge pattern, throw, temperature difference and occupied-zone velocity. |
| **Sound** | Selected sound data at the required duty, including any plenum or regulation device. |
| **Effective area** | Use the selected product free/effective area. Nominal W x H or duct area is not a substitute. |
| **Exterior duty** | For an exterior louvre, coordinate rain exposure, drainage, screen, air velocity and tested performance. |

Nominal size schedules are listed by product. Product-specific flow, pressure, throw, sound and weather-performance values must come from the offered selection; no unverified numerical ratings are assigned.

A selected terminal and its plenum, damper, screen or support form a coordinated assembly. Optional components require their own dimensions and selection.

04 / PROJECT SCHEDULE

# Release the complete terminal.

Issue one coordinated schedule with the selected room duty, product configuration and installation detail.

| Required record | Confirm before release |
| --- | --- |
| **Identification** | Voltvent code, nominal size, quantity, room/duct reference and air function. |
| **Geometry** | Actual neck, outside face, depth, finished opening, frame overlap and mounting interface. |
| **Construction** | Selected material, finish, blade/core arrangement, service environment and cleaning access. |
| **Air-side selection** | Offered airflow, pressure, air pattern, throw, effective area and sound data. |
| **Installation** | Selected fixing, sealing, independent support, plenum/duct connection and access. |
| **Additional interfaces** | Any damper, screen, return-air path, continuous-run joint or ceiling/door/facade requirement. |

## READ THE SCHEDULE WITH THE DRAWING

All 10 series use the nominal schedules listed in this catalogue. Outside frame dimensions and selected performance remain part of the offered product documentation. Catalogue review and engineering release remain separate.

VOLTVENT®
VENTILATION SYSTEMS



# Controls




**VSC**




**VFI**

## Coordinate the motor and control method.

VSC / VFI

01 / PRODUCT INDEX

# Two control routes. One selection brief.

Select the controller around the motor, supply and operating duty; a fan model name alone does not establish compatibility.




## VSC

### Fan speed controller

Manual speed control for a compatible single-phase fan motor. Three listed current-class entries.

087 / DATA  088 / INSTALLATION




## VFI

### Three-phase frequency converter

Frequency conversion for a compatible three-phase fan motor. Seventeen listed selection entries.

Supply brand depends on stock at order.

089 / DATA  090 / INSTALLATION

Product images are illustrative. Final housing, dimensions, supply and electrical configuration depend on the selected device variant.

02 / SELECTION OVERVIEW

# Match the control method to the motor.

Single-phase speed control and three-phase frequency conversion are different selection routes.

| Selection | VSC | VFI |
|---|---|---|
| **Function** | Manual fan speed controller | Frequency converter for a three-phase motor |
| **Motor basis** | Motor suitable for the offered single-phase control method | Motor suitable for the selected converter and operating range |
| **Listed selection value** | Current class / A | Power class / kW; voltage designation where listed |
| **Supply selection** | Confirm the selected device supply, motor circuit and control method | Confirm input phase/range, output class and motor winding |
| **Physical interface** | Case fixing, cable entries and accessible operating knob | Selected enclosure, cooling space, mounting and keypad access |

## SELECT THE COMPLETE ASSEMBLY

Confirm the exact motor and control configuration, full-load current, starting and low-speed behaviour, thermal protection and project control requirements. No universal fan-family compatibility is assigned.

VSC / CURRENT SCHEDULE

# VSC

Fan speed controller




Manual speed control for a compatible single-phase fan motor. Match the listed current class to the offered device and the actual motor/control arrangement.

**3 listed selection entries**

| Voltvent model | Listed current class / A |
|---|---|
| **VSC 1 (2,50A)** | 2.50 |
| **VSC 2 (5,00A)** | 5.00 |
| **VSC 3 (7,50A)** | 7.50 |

## CONFIRM THE OFFERED DEVICE

Supply voltage, control method, current duty, minimum speed, enclosure protection and motor compatibility require the selected device documentation. No control-frequency range or universal motor suitability is inferred from the current class.

VSC / INSTALLATION EXAMPLE

# Wall controller installation

Dimensionless installation context. Follow the selected device and motor documentation for the actual circuit and fixing.

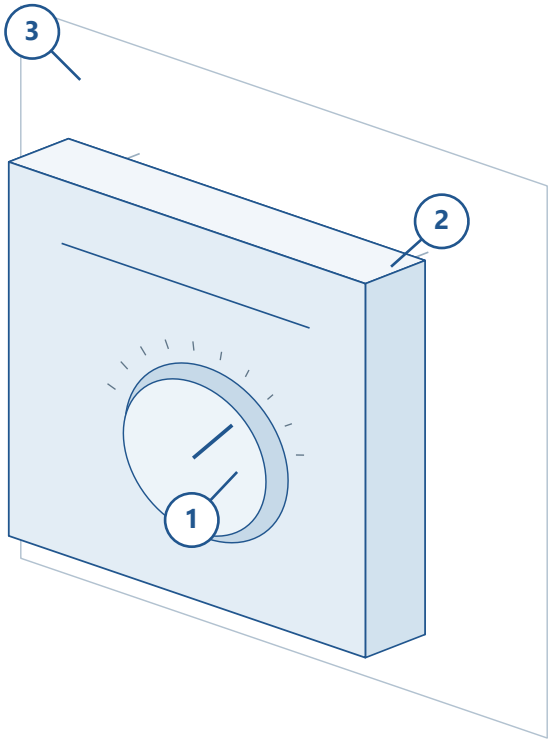


### 01 / Operating control

Keep the operating knob visible and accessible. Confirm the permitted control range for the selected motor.

### 02 / Case fixing

Use the offered enclosure drawing for fixing points and cable entries. No fixing pitch or enclosure size is assigned here.

### 03 / Installation context

Coordinate the supporting wall, cable route and access. Supply isolation and circuit protection are selected separately.

The drawing identifies physical interfaces only. It is not a terminal diagram and does not prescribe live conductor, neutral, earth or motor-capacitor connections.

VFI / POWER SCHEDULE

# VFI

Three-phase frequency converter




Illustrative product image / selected enclosure may differ

A frequency converter for a compatible three-phase fan motor. Select the exact supply/output class and motor arrangement before confirming the electrical duty.

## BRAND SUPPLY AT ORDER

At the time of order, the brand supplied will depend on stock availability. Mitsubishi, Siemens, Danfoss or local brands may be supplied. The selected unit will follow the confirmed order specification.

**17 listed selection entries**

| Voltvent model | Power class / kW | Voltage designation / V |
|---|---|---|
| **VFI 0,75 (220V)** | 0.75 | 220 |
| **VFI 1,10 (220V)** | 1.10 | 220 |
| **VFI 2,20 (220V)** | 2.20 | 220 |
| **VFI 0,75 (380V)** | 0.75 | 380 |
| **VFI 1,10 (380V)** | 1.10 | 380 |
| **VFI 2,20 (380V)** | 2.20 | 380 |
| **VFI 3,00** | 3.00 | 380 |
| **VFI 4,00** | 4.00 | 380 |
| **VFI 5,50** | 5.50 | 380 |
| **VFI 7,50** | 7.50 | 380 |
| **VFI 11,00** | 11.00 | 380 |
| **VFI 15,00** | 15.00 | 380 |
| **VFI 18,50** | 18.50 | 380 |
| **VFI 22,00** | 22.00 | 380 |
| **VFI 30,00** | 30.00 | 380 |
| **VFI 37,00** | 37.00 | 380 |
| **VFI 45,00** | 45.00 | 380 |

Voltage designations are selection labels, not confirmed input/output ranges. Confirm supply phase, input range, output voltage, rated output current and motor winding for the offered variant.

VFI / INSTALLATION EXAMPLE

# Converter mounting and access

Illustrative enclosure format only. Actual mounting, cooling space and connections depend on the selected converter.

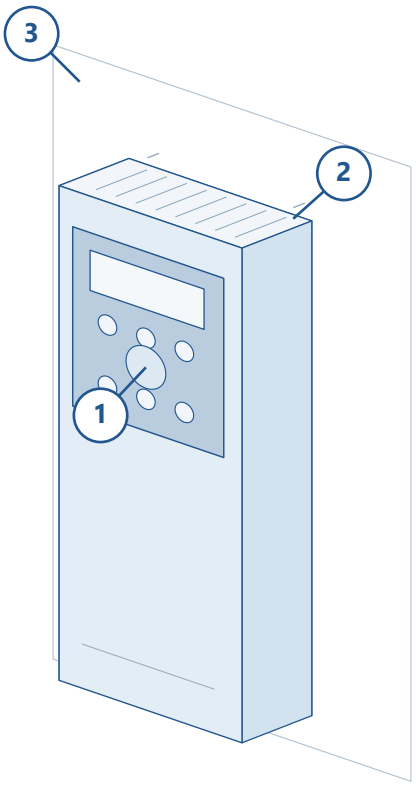


### 01 / Operator interface

Keep the selected keypad/display accessible. Identify the actual commands and indications in the project control description.

### 02 / Mounting interface

Confirm the selected enclosure drawing, fixings and required cooling clearances. Do not scale dimensions from this illustration.

### 03 / Supporting structure

Coordinate the cabinet or mounting surface, cable routing and service access for the offered drive assembly.

No IP class, ambient limit, cooling clearance, terminal designation, protection function or certified configuration is assigned from the illustrated housing.

03 / FUNCTIONAL INTEGRATION

# Coordinate power and control paths.

Conceptual architecture only. The blocks below are not a wiring diagram or a statement of interchangeable motor/controller types.

## SINGLE-PHASE CONTROLLER ROUTE

**Supply selection**

Selected supply, isolation and circuit protection.

→

**VSC**

Selected device and project control method.

→

**Fan motor**

Compatible single-phase motor.

## FREQUENCY-CONVERTER ROUTE

**Supply selection**

Selected supply, isolation and circuit protection.

→

**VFI**

Selected device and project control method.

→

**Fan motor**

Compatible three-phase motor.

Define commands, any selected feedback/interlocks, motor protection and the required response to start, stop and loss of supply. A voltage tag or power class alone does not define the circuit.

04 / PROJECT RELEASE

# Record the selected controller.

Use the catalogue selection entry with the actual electrical, mechanical and commissioning documentation.

| Required record | Complete for the offered assembly |
| --- | --- |
| **Identification** | Exact Voltvent selection entry, supplied brand, controller variant and motor nameplate data. |
| **Electrical duty** | Supply phase/range; output class/current; motor winding; control method and permitted speed range. |
| **Physical drawing** | Released enclosure dimensions, mounting pattern, cable entries, cooling clearances and access. |
| **Circuit documentation** | Selected terminal diagram, isolation, protection, earthing and any motor-specific connection requirements. |
| **Operation** | Commands, selected feedback/interlocks, thermal behaviour and response to loss of supply. |
| **Commissioning** | Selected settings, motor/control checks and the required installation/maintenance records. |

Catalogue review and engineering release remain separate. The listed 3 current-class and 17 power-selection entries preserve the listed Voltvent schedule; unverified variants or ratings are not automatically added.

VOLTVENT®
VENTILATION SYSTEMS

06 / VENTILATION ACCESSORIES

# Electric Duct Heaters



VREH-R



VREH-C

Coordinate heat with proven airflow.

VREH-R / VREH-C

PRODUCT RANGE

# Electric Duct Heaters

Two duct formats. One coordinated approach to air heating.



## VREH-R

### Rectangular duct heater

Flanged heater format for a rectangular duct route. Select the connection, heating duty and control arrangement together.

098 / DATA  099 / INSTALLATION



## VREH-C

### Circular duct heater

Spigot heater format for a circular duct route. Select the duct diameter, heating duty and electrical configuration together.

096 / DATA  097 / INSTALLATION

03 / Application 08 / Dimensions & configuration 09 / Controls & protection
10 / Preliminary sizing 11 / Project specification

01 / APPLICATION

# Heating in the duct route

Preheating, main air heating or reheating, selected to suit the ventilation duty.



Circular connection



Rectangular connection

### 1 Heating section

Electrical elements transfer heat to the passing air stream.

### 2 External electrical enclosure

Keep the connection and control compartment accessible outside the duct.

### 3 Duct interfaces

Select the nominal duct connection separately from the complete casing envelope.

### 4 Coordinated operation

Select fan duty, airflow proof and heater control as one operating sequence.

Approved product photographs illustrate the product range. Confirm the selected configuration and complete dimensions on the final order documents.

02 / CIRCULAR HEATER

# VREH-C

Circular electrical duct heater



An in-duct heating section for a circular connection. The electrical enclosure remains outside the air passage, with access for connection and maintenance.

## NOMINAL CONNECTION SELECTION

Ø100-450 mm

## OPTIONAL HEAT-RECOVERY PAIRINGS

| Heater model | Optional pairing | Nominal Ø / mm | Power / kW |
|---|---|---|---|
| **VREH-C 3,00** | VHRU 1000 | 250 | 3.00 |
| **VREH-C 6,00** | VHRU 2000 | 305 | 6.00 |
| **VREH-C 9,00** | VHRU 3000 | 355 | 9.00 |
| **VREH-C 12,00** | VHRU 4000 | 400 | 12.00 |
| **VREH-C 15,00** | VHRU 6000 | 450 | 15.00 |

These are the listed optional pairings. They do not restrict the heater to these units. Diameter is the nominal connection designation, including the Ø305 entry; confirm mating dimensions before manufacture.

Select heating power, electrical supply and control stages for the required airflow and temperature rise. Not every power/diameter combination is a released configuration.

03 / INSTALLATION EXAMPLE

# Circular duct installation

Fan → straight circular duct → heater

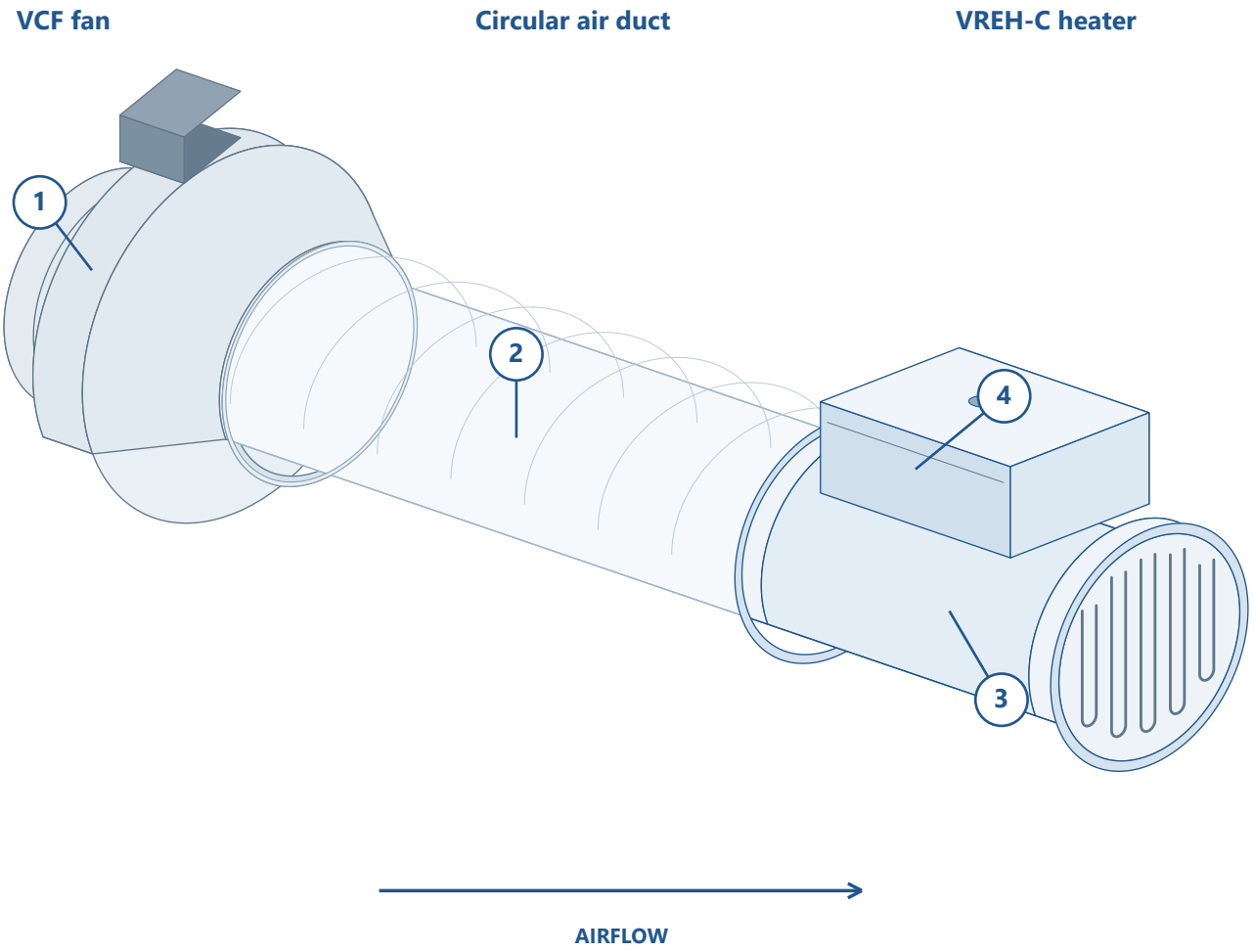


### 1 Fan example

VCF illustrates the circular fan interface. Select the actual fan for the required system duty.

### 2 Straight duct section

Provide the straight run and uniform airflow required by the selected heater instructions.

**3 / Heating section** Match the connection and support the assembly as specified.
**4 / Electrical access** Keep the external enclosure accessible and protect it from condensate.

04 / RECTANGULAR HEATER

# VREH-R

Rectangular electrical duct heater



An in-duct heating section for a rectangular connection. Coordinate the clear duct opening, flanged interface, element section and external electrical enclosure.

## NOMINAL W / H SELECTION ENTRIES

200-2000 mm

## OPTIONAL HEAT-RECOVERY PAIRINGS

| Heater model | Optional pairing | W / mm | H / mm | Power / kW |
|---|---|---|---|---|
| **VREH-R 3,00** | VHRU-B 1000 | 200 | 455 | 3.00 |
| **VREH-R 3,00** | VHRU-B 2000 | 300 | 455 | 3.00 |
| **VREH-R 5,00** | VHRU-B 3000 | 400 | 555 | 5.00 |
| **VREH-R 8,00** | VHRU-B 4000 | 400 | 555 | 8.00 |
| **VREH-R 10,00** | VHRU-B 5000 | 400 | 655 | 10.00 |
| **VREH-R 13,00** | VHRU-B 6000 | 400 | 855 | 13.00 |

W and H are the listed nominal connection values. The listed optional pairings are examples within the product range; they are not an exclusive compatibility list.

Specify W × H separately from heater length, terminal-box projection and service clearance. Overall dimensions are confirmed on the selected arrangement drawing.

05 / INSTALLATION EXAMPLE

# Rectangular duct installation

Fan → straight rectangular duct → heater

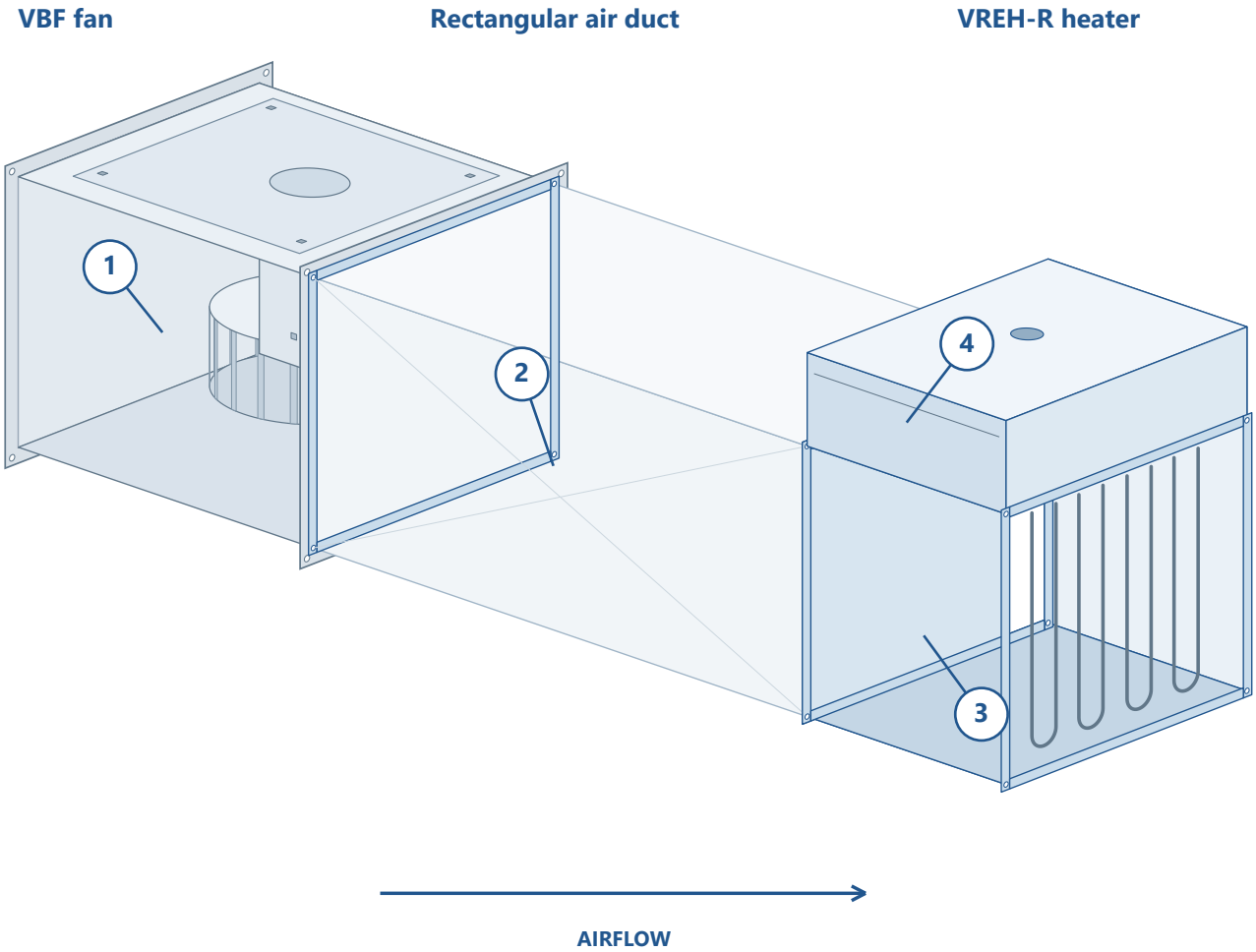


### 1 Fan example

VBF illustrates the rectangular fan interface. Other suitable fan arrangements can be selected.

### 2 Straight duct section

Keep a uniform air path through the element bank. Set the straight-run length in the final layout.

**3 / Heater interface** Match the duct opening and flange arrangement.
**4 / Service access** Leave access to the external electrical enclosure and isolate before maintenance.

06 / CONFIGURATION

# Define the connection first

Nominal duct connection and complete heater envelope are separate selection fields.

| Selection field | VREH-C / circular | VREH-R / rectangular |
|---|---|---|
| **Nominal connection entry** | Ø100-450 mm | W / H: 200-2000 mm |
| **5 kW configuration example** | Ø250 mm | 500 × 300 mm |
| **Example casing material** | G / galvanised steel | G / galvanised steel |
| **Example supply configuration** | 3 / 400 V · 3~ | 3 / 400 V · 3~ |
| **Example control stages** | 2 | 2 |

Configuration examples explain the selection fields; they are not additional released model codes. Confirm allowable power, connection and control combinations for the offered unit.

## CASING MATERIAL SELECTIONS

G / Galvanised steel

S / Stainless steel

## SUPPLY CONFIGURATION LABELS

| Code | Supply designation |
|---|---|
| **1** | 230 V · 1~ |
| **2** | 400 V · 2~ |
| **3** | 400 V · 3~ |

07 / CONTROLS & PROTECTION

# Airflow before heat

Functional sequence only. Select the actual circuit and protection devices for the offered heater.

01

### FAN ENABLE

Start the selected fan and establish the required airflow.

02

### AIRFLOW PROOF

Use the specified proving device before enabling heater power.

03

### HEAT DEMAND

Apply staged switching or modulating power control as specified.

04

### TEMPERATURE LIMIT

Use independent temperature protection and the selected reset arrangement.

### SELECT THE CONTROL ARRANGEMENT

On/off stages use appropriately rated switching equipment. Modulating control uses a selected power controller and compatible demand signal. Temperature sensing and airflow proof remain part of the coordinated operating sequence.

Loss of proven airflow or operation of safety protection must remove heater demand/power as required by the selected safety circuit. Confirm restart, reset and fan run-on functions on the approved control drawing.

08 / PRELIMINARY SIZING

# Relate heat to airflow

A preliminary air-heating calculation supports selection. It does not replace a heater duty report.

$$P \approx 0.00036 \times Q \times \Delta T$$

P / kW  Q / $m^3/h$  ΔT / K

This simplified sensible-heat relation uses an approximate standard-air heat-capacity factor. Adjust the design calculation for actual air conditions and applicable losses.

## ILLUSTRATIVE CALCULATION

| Input / result | Illustrative value |
|---|---|
| **Airflow Q** | 1000 $m^3/h$ |
| **Temperature rise ΔT** | 10 K |
| **Calculated heat input P** | 3.60 kW |
| **Illustrative circular duct diameter** | 250 mm |
| **Calculated duct area** | 0.0491 $m^2$ |
| **Calculated average duct velocity** | 5.66 m/s |

Area = $\pi D^2 / 4$; velocity = Q / (3600 × area), with D in metres. The values above are a calculation example, not a product rating or a confirmed minimum operating airflow.

09 / PROJECT SPECIFICATION

# Complete the selected duty

Confirm the selected configuration before manufacture and installation.

| Coordinate | Specify / confirm |
|---|---|
| **Duct connection** | Circular diameter or rectangular W × H; connection tolerances and flange details. |
| **Heating duty** | Required airflow, entering temperature, leaving temperature and heating power. |
| **Electrical arrangement** | Actual supply, stages, rated current, switching and local isolation. |
| **Controls & interlocks** | Demand control, airflow proof, temperature limits, reset and fan run-on. |
| **Complete envelope** | Heater length, electrical enclosure, insertion depth and service space. |
| **Mechanical installation** | Orientation, straight duct run, independent supports and condensate protection. |
| **Selected performance** | Permitted air-velocity range, temperature limits and pressure loss at the design flow. |
| **Handover documents** | Selected arrangement drawing, wiring diagram, settings and commissioning checks. |

The installation examples show the fan, duct and heater relationship. They are dimensionless and do not define an exclusive fan match, anchorage design or electrical terminal scheme.

VOLTVENT®
VENTILATION SYSTEMS

## HEADQUARTER

VOLTVENT VENTILATION SYSTEMS

Yeşilköy, EGS
Business Park B2
Blok No:12 Kat :
Zemin, 34149
Bakırköy/İstanbul

www.voltvent.com