**VSF SERIES**

# Square case centrifugal duct fans

# VSF

**ALUMINIUM CENTRIFUGAL IMPELLER**

**POWDER-COATED STEEL CASING**

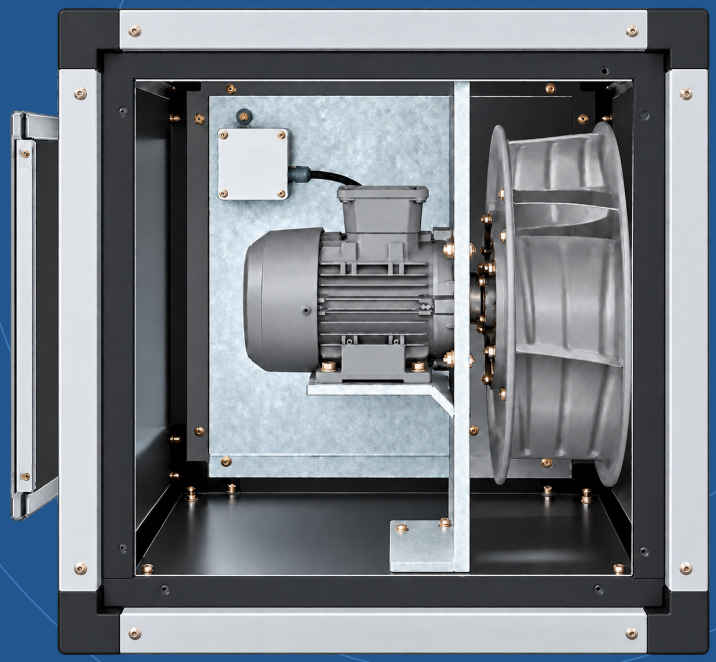

| 280-710 | 09 | 50 Hz |
|---|---|---|
| Duct connection range / mm | Models in the range | Three-phase AC |

01 / PRODUCT & TECHNICAL DATA

# Compact form. Clear construction.

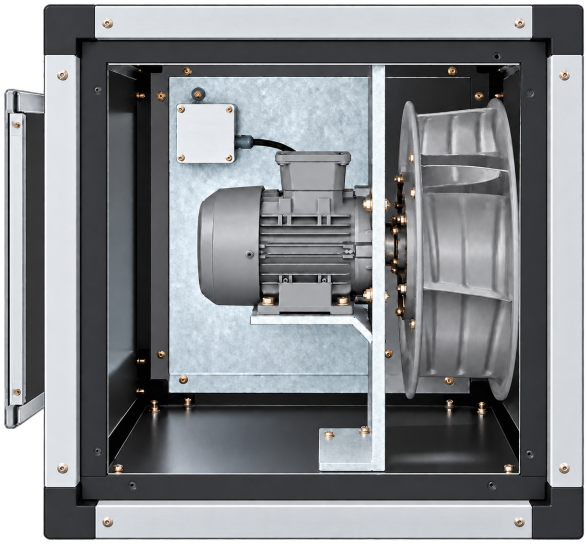

01 **Service access**

Open service door provides access to the fan and motor assembly for inspection and maintenance.

02 **Aluminium impeller**

Aluminium impeller driven by a motor positioned within the airstream.

03 **Powder-coated steel casing**

Galvanized sheet-metal casing with an electrostatic powder coating.

## MODEL SPECIFICATIONS

Nominal reference values / 50 Hz

| Model | Duct / mm | Max. airflow* $m^3/h$ | Reference power W / at 0 Pa | Reference speed rpm / at 0 Pa | Supply V / phase |
|---|---|---|---|---|---|
| **VSF 280** | 280 | 1100 | 180 | 1450 | 380 / 3 |
| **VSF 315** | 315 | 1600 | 250 | 1469 | 380 / 3 |
| **VSF 355** | 355 | 2300 | 370 | 1471 | 380 / 3 |
| **VSF 400** | 400 | 3300 | 550 | 1478 | 380 / 3 |
| **VSF 450** | 450 | 5000 | 750 | 1454 | 380 / 3 |
| **VSF 500** | 500 | 7000 | 1100 | 1462 | 380 / 3 |
| **VSF 560** | 560 | 9800 | 1500 | 1464 | 380 / 3 |
| **VSF 630** | 630 | 14000 | 3000 | 1465 | 380 / 3 |
| **VSF 710** | 710 | 13000 | 4000 | 950 | 380 / 3 |

* Maximum airflow is the upper limit of the supplied performance-curve range, rounded to whole $m^3/h$; it is not a selected duty-point value. Other values are 50 Hz catalogue references at 0 Pa. Actual input power and speed depend on the duty point. Motor current and unit weight were not supplied.

02 / AIR PERFORMANCE / 01

# Fan Performance Curves

## VSF 280

3~380 V / 50 Hz

Static pressure / Pa

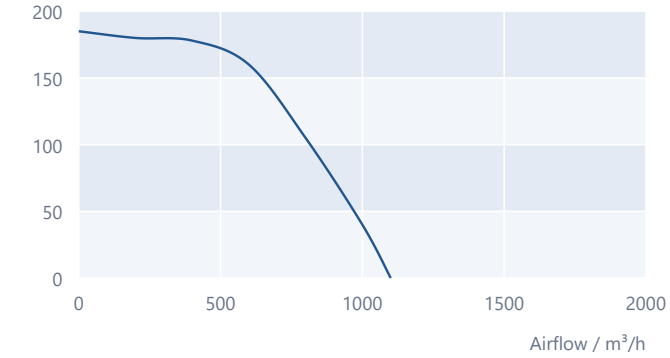


## VSF 315

3~380 V / 50 Hz

Static pressure / Pa

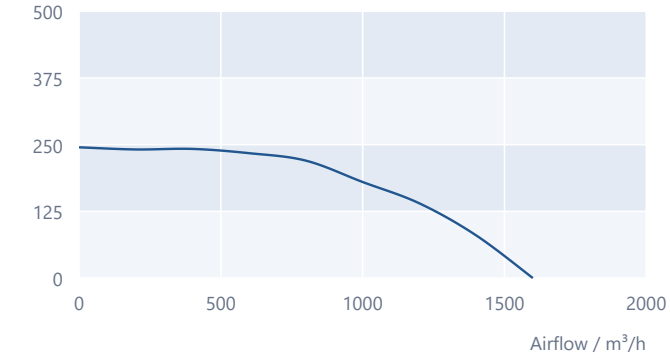


## VSF 355

3~380 V / 50 Hz

Static pressure / Pa

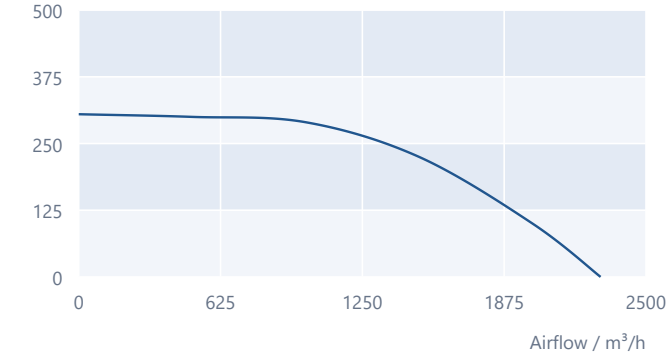


## VSF 400

3~380 V / 50 Hz

Static pressure / Pa

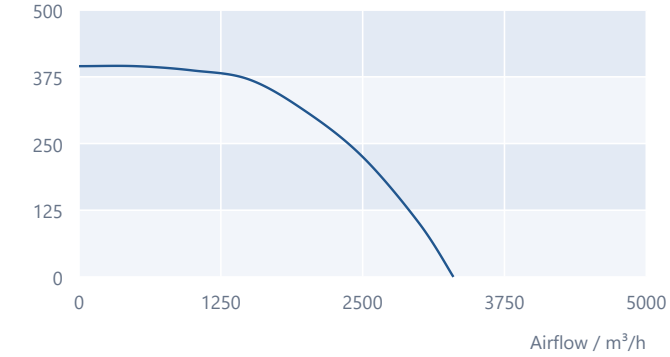


## VSF 450

3~380 V / 50 Hz

Static pressure / Pa

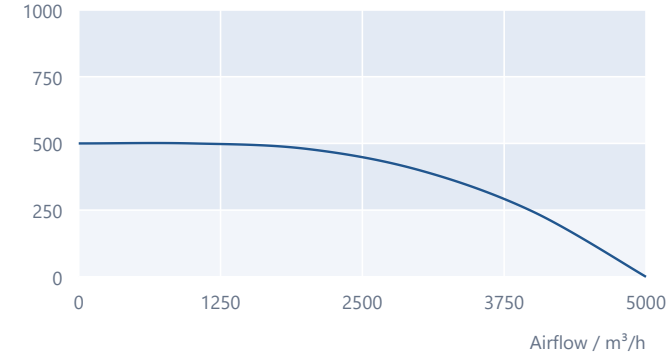


Model-specific axis scales. Listed 50 Hz curves shown only within their ranges. Maximum airflow and pressure are separate endpoints.

02 / AIR PERFORMANCE / 02

# Fan Performance Curves

## VSF 500

3~380 V / 50 Hz

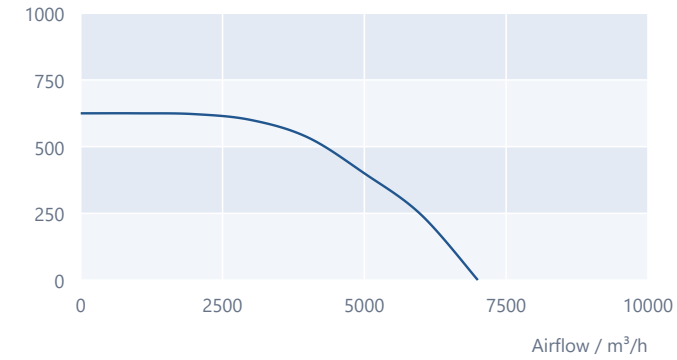


## VSF 560

3~380 V / 50 Hz

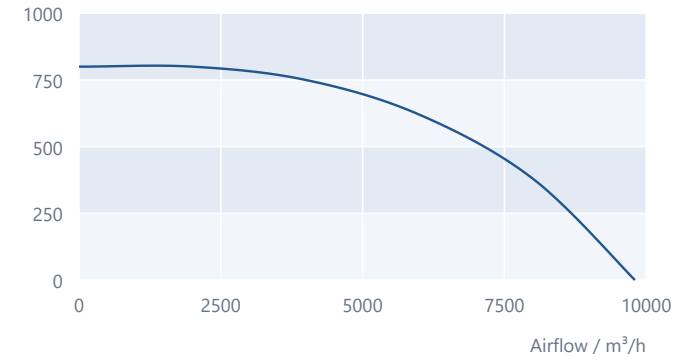


## VSF 630

3~380 V / 50 Hz

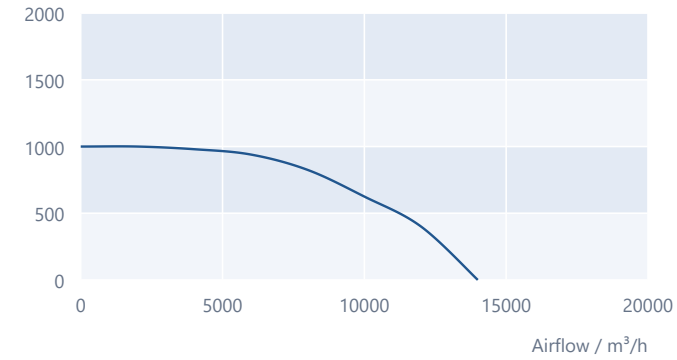


## VSF 710

3~380 V / 50 Hz

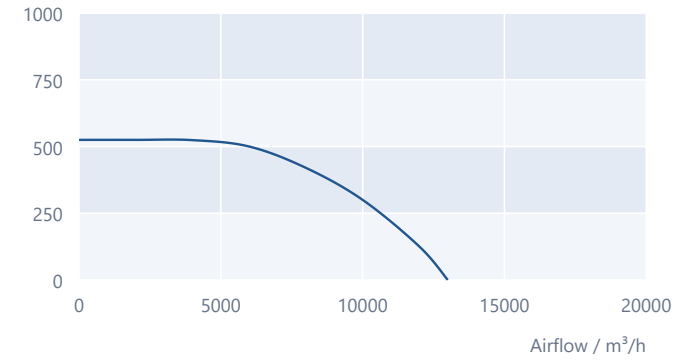


Model-specific axis scales. Listed 50 Hz curves shown only within their ranges. Maximum airflow and pressure are separate endpoints.

03 / DIMENSIONAL DATA

# Plan the installation.

## FAMILY DRAWING

All dimensions in mm

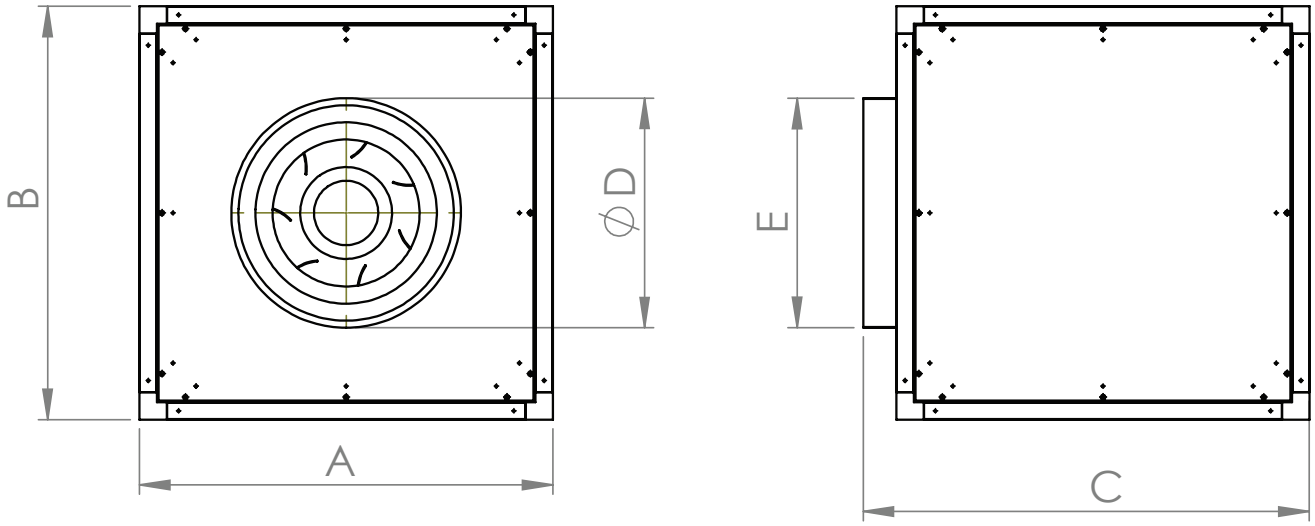


| Model | A | B | C | Ø D | E |
|---|---|---|---|---|---|
| **VSF 280** | 450 | 450 | 520 | 280 | 250 |
| **VSF 315** | 500 | 500 | 570 | 315 | 300 |
| **VSF 355** | 500 | 500 | 570 | 355 | 300 |
| **VSF 400** | 600 | 600 | 600 | 400 | 350 |
| **VSF 450** | 700 | 700 | 770 | 450 | 400 |
| **VSF 500** | 800 | 800 | 870 | 500 | 450 |
| **VSF 560** | 900 | 900 | 970 | 560 | 500 |
| **VSF 630** | 1000 | 1000 | 1070 | 630 | 600 |
| **VSF 710** | 1100 | 1100 | 1170 | 710 | 650 |

VSF series / duct connection range 280-710 mm

Family drawing. Dimension values follow the model records in Voltvent Selection Software.

04 / INSTALLATION & MOTOR DATA

# Plan for access and service.

## 01 Duct connection

Match the circular connection to the selected model. Use dimensions A-E to plan the casing envelope and mounting space.

## 02 Installation & access

Support the cabinet securely. Keep the service-door opening clear so that the motor and impeller remain accessible for inspection and cleaning.

## 03 Applications

General exhaust, duct ventilation and pressurization applications. Keep the airflow path clear and respect the stated operating temperature range.

### MOTOR & OPERATING CONDITIONS

| Parameter | Catalogue reference |
|---|---|
| **Electrical supply** | 3~380 V / 50 Hz |
| **Insulation / protection** | Class F / IP55 |
| **Motor efficiency class** | IE3 |
| **Duty classification** | S1 |
| **Operating temperature** | -20 to +50 °C |

Use the electrical connection diagram supplied with the actual unit. The supplied star (Y) connection diagram is on the next page. Disconnect the supply before servicing.

05 / ELECTRICAL CONNECTION

# Three-phase star connection.

VSF / 380 V / 50 Hz - STAR (Y)

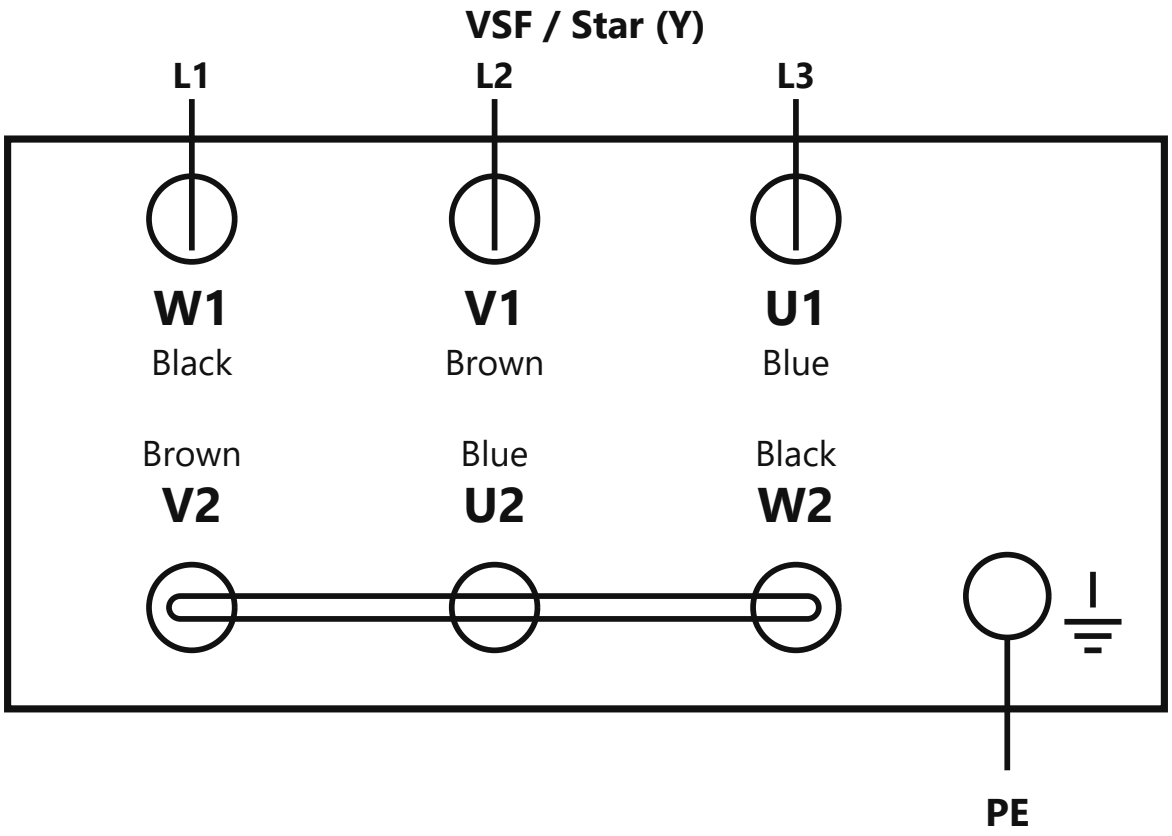


## CONNECTION KEY

| Marking | Function |
|---|---|
| **L1 / L2 / L3** | Phase supply |
| **W1 / V1 / U1** | Supply-connected terminals, in the shown order |
| **V2 / U2 / W2** | Star point / terminals linked as shown |
| **PE** | Protective earth |

Terminal codes, conductor colours and the star-point link follow the supplied drawing. Use the actual motor nameplate and supplied terminal diagram. Disconnect the electrical supply before servicing.

# VSF

## Square case
## Centrifugal duct fans



VOLTVENT®
VENTILATION SYSTEMS

info@voltvent.com | voltvent.com