VAF-C SERIES

Circular wall mounted axial fans

VAF-C

DIRECT-DRIVE AXIAL IMPELLER

POWDER-COATED STEEL CASING



250-600
Fan diameter / mm

09
Models in the range

50 Hz
Single-phase AC

01 / PRODUCT OVERVIEW

Ventilation in a compact form.



01 Direct axial airflow

A single-phase AC motor directly drives the axial impeller. Eight diameters cover the series. The 250-2P model is two pole; all unsuffixed models are four pole.

02 Guard and mounting

The casing and axial impeller use powder-coated sheet metal. A protective wire guard covers the motor side.

03 Supply, extract and circulation

For general ventilation in factories, warehouses and commercial spaces. Keep inlet and outlet paths unobstructed.

SELECTION & PERFORMANCE

Select by diameter and motor variant.

Nine 50 Hz models combine eight diameters with single-phase motors. The 250-2P model provides a separate two-pole option. Pressure curves show listed performance data and remain within their supplied airflow domains. Observe the selected motor voltage, capacitor and transported-air temperature limit.

Selection parameter	Catalogue basis
Fan diameter range	250-600 mm / 8 diameters
Nominal input power	125-390 W
Electrical supply	230 V / 1 phase / 50 Hz
Motor insulation / protection	Class B / IP44

Performance data. Speed control must suit the selected motor.

02 / TECHNICAL DATA

Compare the motor variants.

9 MODELS / 50 Hz

Model	Poles	V / PH	Input W	Airflow m^3/h	Speed rpm	Current A	Weight kg	Air temp. °C
VAF-C 250-2P	2	230/1	180	2200	2900	1.6	7	40
VAF-C 250	4	230/1	125	1200	1450	0.6	6	40
VAF-C 300	4	230/1	165	2000	1450	0.79	7	40
VAF-C 350	4	230/1	210	3250	1450	0.92	8	40
VAF-C 400	4	230/1	220	4500	1450	0.97	8.5	40
VAF-C 450	4	230/1	300	5000	1450	1.32	10.3	40
VAF-C 500	4	230/1	320	5500	1435	1.4	12	40
VAF-C 550	4	230/1	375	6000	1425	1.65	14.7	40
VAF-C 600	4	230/1	390	8000	1425	1.71	19.8	40

Airflow: nominal maximum airflow in m^3/h; not a selected duty point. Listed curve domains may differ from nominal airflow. Nominal input power, speed and current are ratings; operating values vary with airflow.

Temperature: maximum transported-air temperature for each variant. Class B / IP44 throughout the supplied records. 250-2P: two poles; unsuffixed models: four poles. All models use single-phase supply.

03 / AIR PERFORMANCE / 01

Fan Performance Curves

VAF-C 250-2P / 180 W

1 phase / 50 Hz / reference 2900 rpm

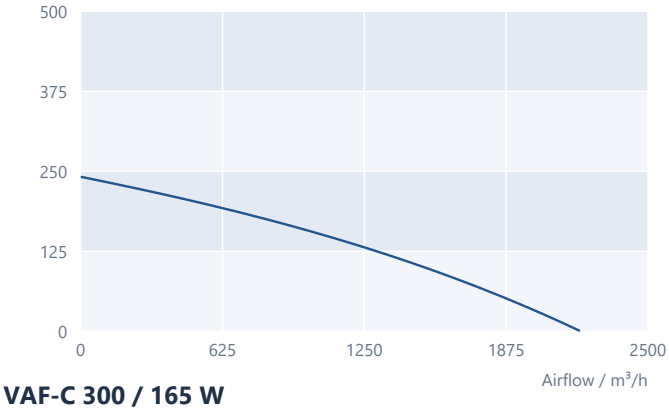

VAF-C 250 / 125 W

1 phase / 50 Hz / reference 1450 rpm

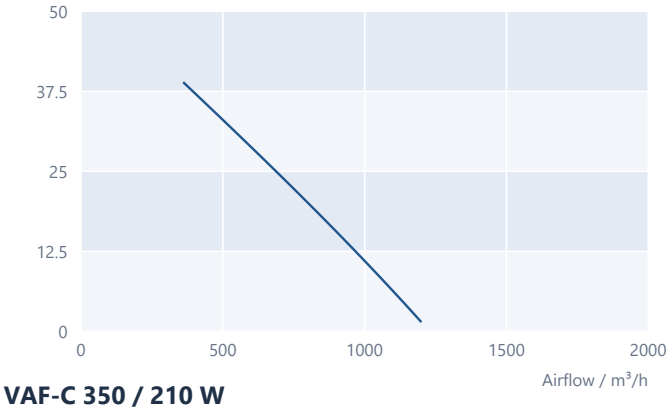

VAF-C 300 / 165 W

1 phase / 50 Hz / reference 1450 rpm

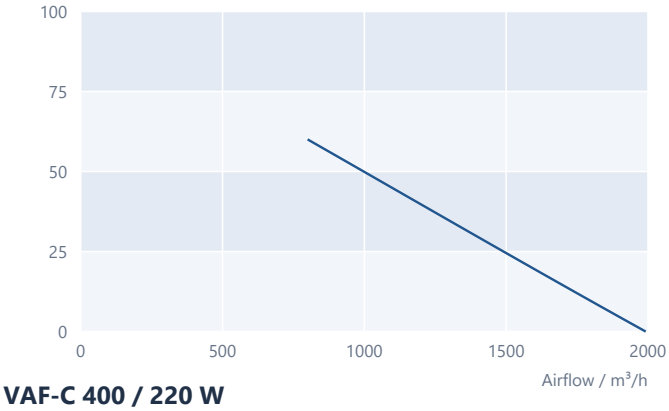

VAF-C 350 / 210 W

1 phase / 50 Hz / reference 1450 rpm

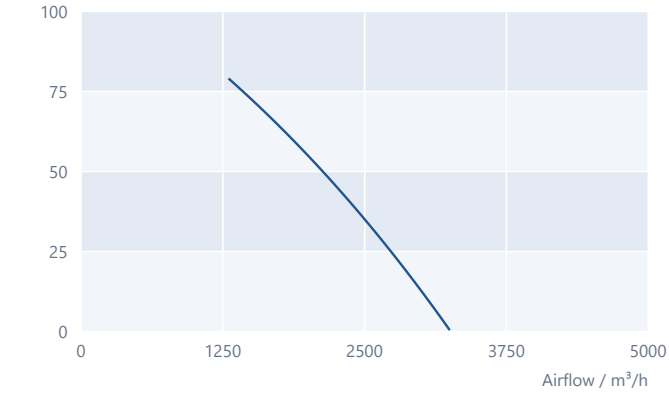

VAF-C 400 / 220 W

1 phase / 50 Hz / reference 1450 rpm

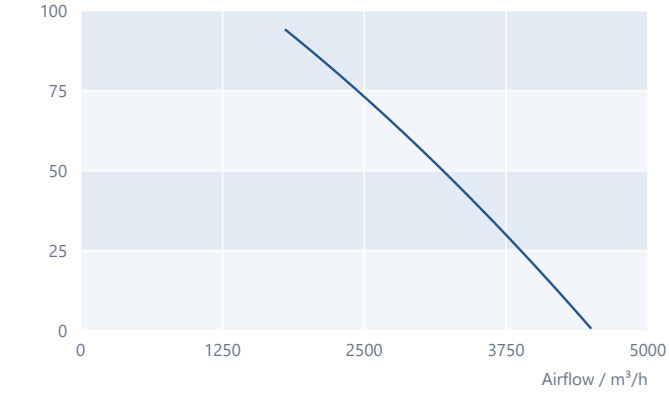

Model-specific scales. Listed 50 Hz pressure curves stay within listed airflow domains; negative-pressure tails are omitted at the zero-pressure crossing. No extrapolation.

03 / AIR PERFORMANCE / 02

Fan Performance Curves

VAF-C 450 / 300 W

1 phase / 50 Hz / reference 1450 rpm

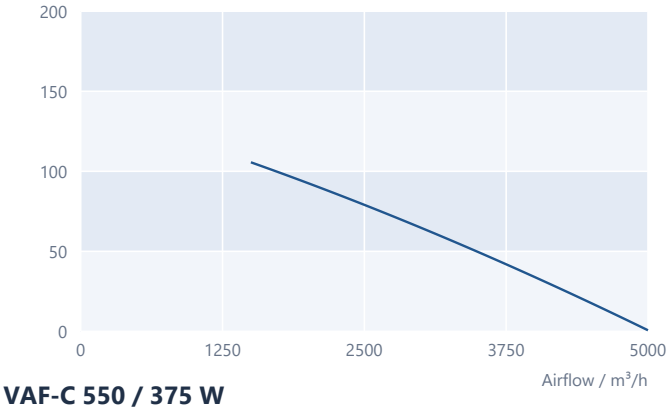

VAF-C 500 / 320 W

1 phase / 50 Hz / reference 1435 rpm

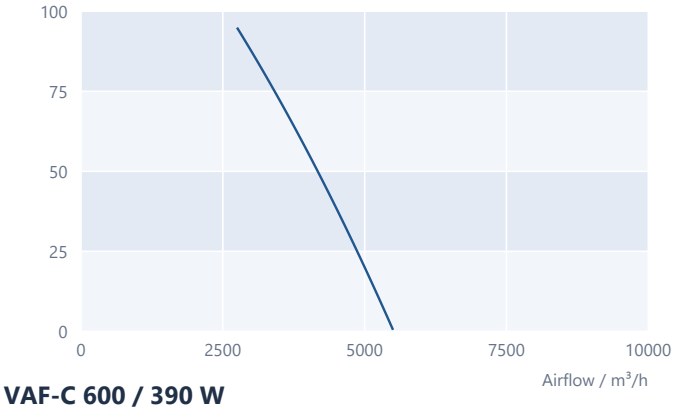

VAF-C 550 / 375 W

1 phase / 50 Hz / reference 1425 rpm

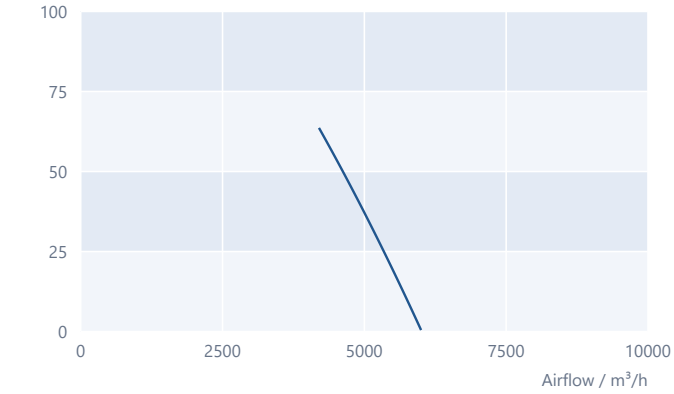

VAF-C 600 / 390 W

1 phase / 50 Hz / reference 1425 rpm

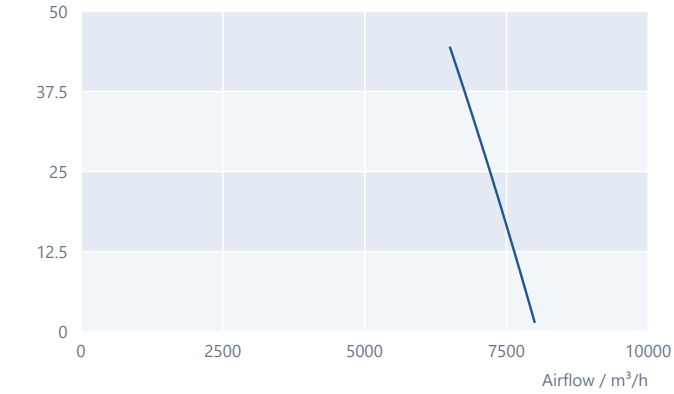

Model-specific scales. Listed 50 Hz pressure curves stay within listed airflow domains; negative-pressure tails are omitted at the zero-pressure crossing. No extrapolation.

04 / DIMENSIONAL DATA

Plan the mounting points.

SERIES DRAWING / 250-600

All dimensions in mm

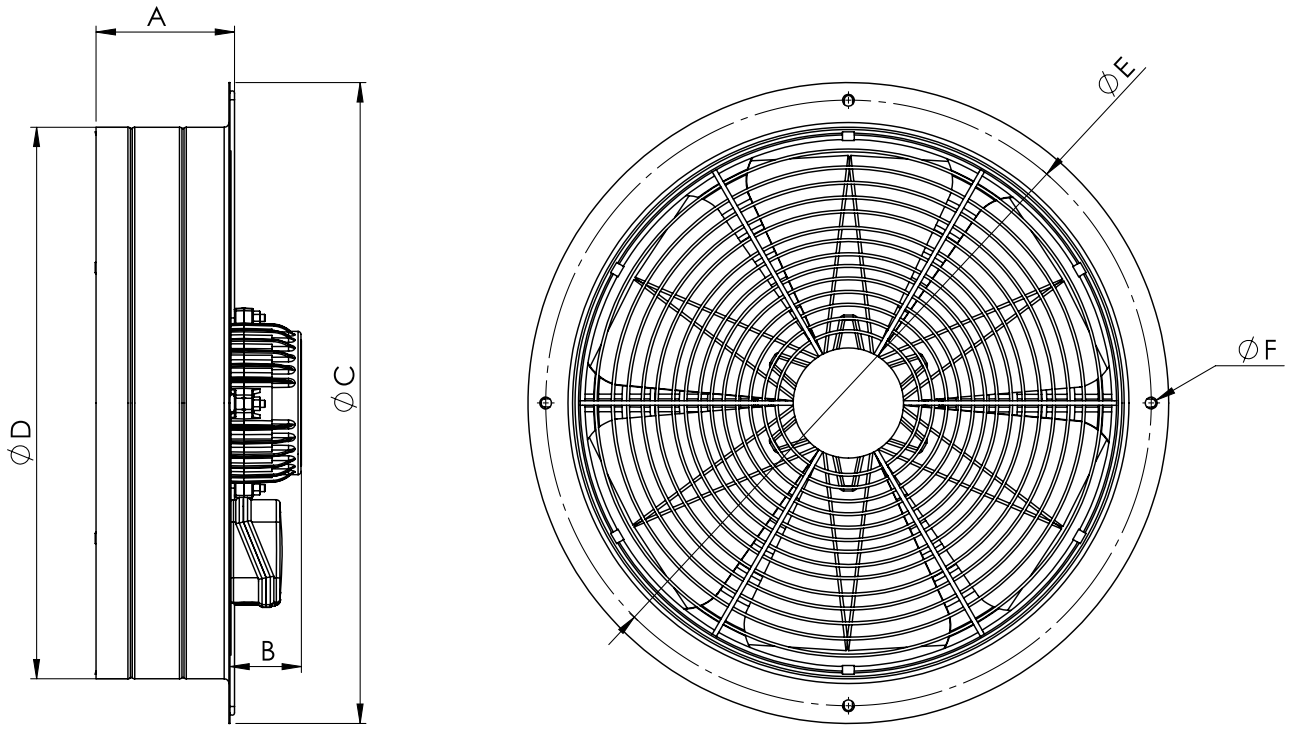

Model size	A	B	C	D	E	F
VAF-C 250	114	61	304	251	277	10
VAF-C 300	114	61	390	325	360	10
VAF-C 350	114	61	435	374	405	10
VAF-C 400	114	61	485	427	455	10
VAF-C 450	114	61	546	470	516	10
VAF-C 500	125	61	590	518	560	10
VAF-C 550	130	160	624	560	595	10
VAF-C 600	130	160	674	610	645	10

Original data drawing. The 250 and 250-2P share the listed dimensions; other rows are model specific. Secure the fan at the specified mounting points and allow clearance for the motor-side guard.

05 / ELECTRICAL & INSTALLATION

Connect the single-phase motor.

Isolate the supply before installation or maintenance. Secure the mounting points and confirm the intended airflow direction. Use the specified capacitor and a compatible voltage controller. Keep the fan casing and protective guard clear.

SINGLE PHASE / DIAGRAM 05

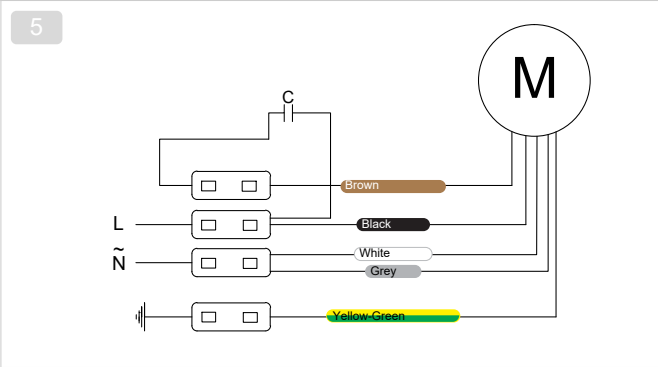

SINGLE PHASE / DIAGRAM 06

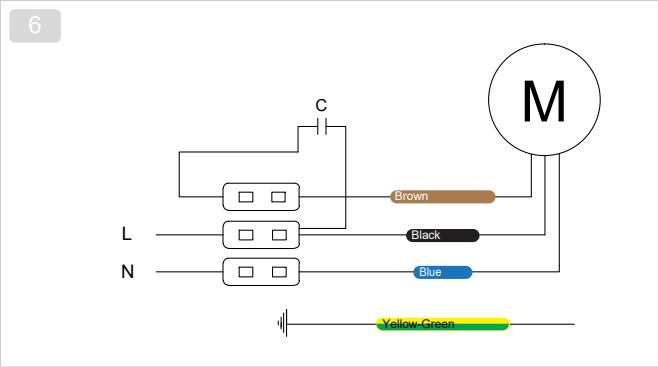

Model	Input power	Capacitor	Capacitor voltage
VAF-C 250-2P	180 W	8 µF	400 V
VAF-C 250	125 W	3 µF	400 V
VAF-C 300	165 W	3 µF	400 V
VAF-C 350	210 W	3 µF	400 V
VAF-C 400	220 W	6 µF	400 V
VAF-C 450	300 W	6 µF	400 V
VAF-C 500	320 W	6 µF	400 V
VAF-C 550	375 W	6 µF	400 V
VAF-C 600	390 W	6 µF	400 V

Schema 05: unsuffixed250-450 models. Schema06: 250-2P and500-600 models. Supply:1~230V/50Hz. Follow the actual motor nameplate and supplied unit diagram.

VAF-C

Circular wall mounted axial fans

VOLTVENT®
VENTILATION SYSTEMS

info@voltvent.com | voltvent.com