VLF-CC SERIES

Centrifugal car park jet fans

VLF-CC

F300/F400°C 2h

LOW-PROFILE GALVANIZED CASING

CENTRIFUGAL IMPULSE VENTILATION

F300°C / F400°C

120-minute smoke duty options



48-90 N
High-speed thrust

03
Model sizes

Two speeds
Low / high nominal duty

01 / PRODUCT OVERVIEW

Impulse ventilation. Compact form.



01 Low-profile casing

A compact galvanized sheet-steel casing supports ceiling-mounted impulse ventilation in car parks with limited ceiling height.

02 Directed jet discharge

Vertical intake and horizontal jet discharge move air along the planned ventilation route. Provide clear inlet and outlet paths.

03 Three nominal model sizes

50N, 70N and 90N provide two nominal operating speeds. Select using the stated airflow and actual thrust values for each model.

F300

300°C / 120 minutes

F400

400°C / 120 minutes

SHARED F300°C / F400°C SELECTION DATA

Both smoke-duty options use the same nominal performance and dimensions within each model. Motor specifications and acoustic reference distances vary by model; see the following tables.

Selection parameter	Range
Models	50N / 70N / 90N
High-speed airflow	6 750 / 7 009 / 7 641 m^3/h
High-speed thrust	48 / 70 / 90 N

The 50N model designation is retained from FSP; its listed high-speed thrust is 48 N. Product image is a family illustration. Final unit construction and classification follow the supplied documentation.

02 / NOMINAL PERFORMANCE

Compare both operating speeds.

SHARED F300°C / F400°C NOMINAL SPEED POINTS

Model VLF-CC	Speed	Airflow m^3/h	Thrust N	Motor kW	Speed rpm	Velocity m/s	Sound* dB(A)
50N	Low	3 375	12	0.3	705	-	52
50N	High	6 750	48	1.2	1430	-	73
70N	Low	3 500	19	0.55	750	12.2	43
70N	High	7 009	70	2.2	1500	24.4	58
90N	Low	3 800	25	0.55	750	13.3	46
90N	High	7 641	90	2.2	1500	26.6	62

SOUND REFERENCE DISTANCES

* 50N: sound-pressure level at 3 m. 70N and 90N: noise level at 1 m; the data do not further identify the acoustic quantity. These values use different reference distances and should not be compared directly.

SUPPLIED NOMINAL CONDITIONS

Airflow, thrust, motor power and speed are retained at the low/high nominal conditions. No pressure curves, intermediate-speed interpolation or fan/system pressure-duty calculation is supplied. A dash indicates that the listed value is not available.

The 50N and 70N/90N dimension drawings are presented separately. Do not apply the 70N/90N drawing or noise reference to 50N. F300°C and F400°C are alternative specifications for the supplied unit.

03 / ELECTRICAL & MODEL DATA

Check the specified motor.

MODEL-SPECIFIC INFORMATION

Parameter	VLF-CC 50N	VLF-CC 70N / 90N
Supply	400 V / 3 phase	Not supplied
Frequency	50 Hz	Not supplied
Pole configuration	4-8 poles	Not supplied
Insulation	Class H	Class H
Protection	IP55	IP54-IP55
Efficiency	Not supplied	IE1-IE2
Weight / kg	80	Not supplied
Ordinary temperature	Min. -20°C; max. not supplied	-20 to +50°C

Model	Low-speed current / A	High-speed current / A
50N	1.29	2.92
70N / 90N	Not supplied	Not supplied

FINAL MOTOR SPECIFICATION

The 70N/90N protection and efficiency entries are ranges, not a confirmed single motor rating. Supply, current, weight and wiring must be confirmed for the selected 70N/90N assembly.

Ordinary operating-temperature limits are separate from F300°C / F400°C smoke duty. Specify the required smoke class and follow the actual unit classification and motor nameplate.

04 / DIMENSIONAL DATA / 50N

VLF-CC 50N mounting reference.

50N FAMILY DRAWING / ALL DIMENSIONS IN mm

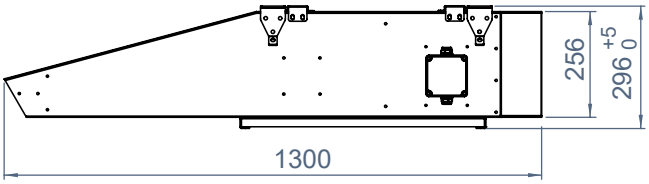

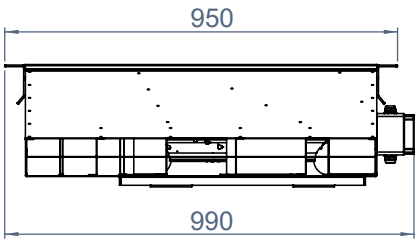

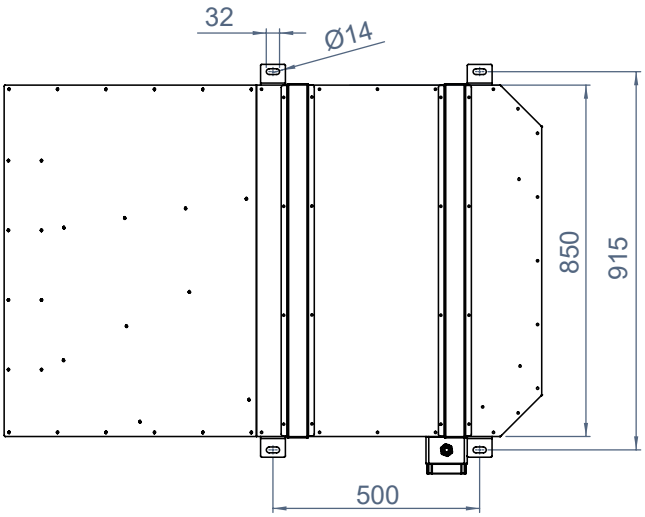

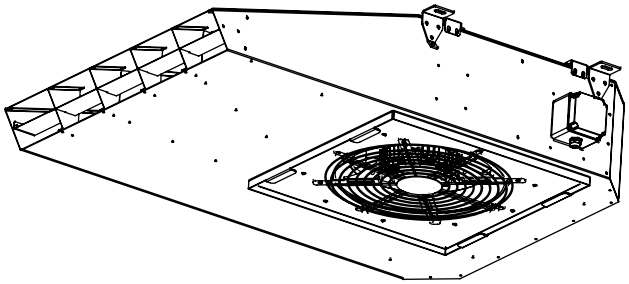

Model	Overall length	Casing width	Overall width
VLF-CC 50N	1 300	950	990

Original vector family drawing with the numerical dimensions retained. Use the marked mounting centres, holes and casing references shown above. This drawing applies to 50N only.

Dimensions shown are the family reference for 50N. Confirm the final assembly and mounting details for the supplied unit before installation.

04 / DIMENSIONAL DATA / 70N & 90N

VLF-CC 70N / 90N mounting reference.

70N / 90N DRAWING / ALL DIMENSIONS IN mm

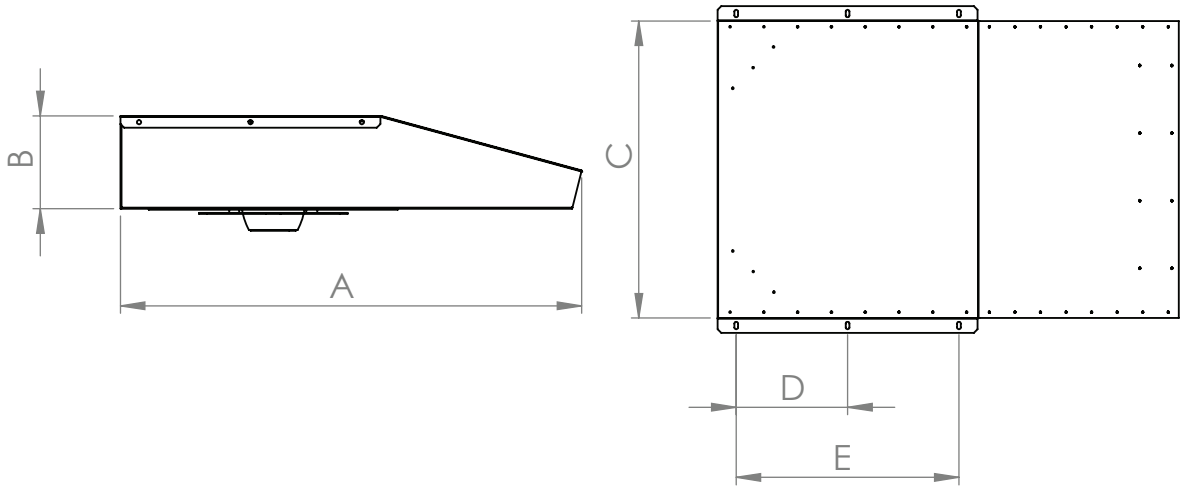

Model	A	B	C	D	E
VLF-CC 70N	1300	300	840	300	600
VLF-CC 90N	1300	300	840	300	600

Original data vector drawing, shown for the listed models. A-E retain their original definitions. 70N and 90N share these dimensions in both F300°C and F400°C tables.

This drawing is separate from the 50N listed family drawing. Confirm the selected assembly, mounting orientation, ceiling supports and maintenance clearance before installation.

06 / CONNECTION & INSTALLATION

Connect the specified two-speed motor.

TWO-SPEED CONNECTION REFERENCE

The diagram shows low-speed star (Y) and high-speed double-star (YY) connections. Terminal numbers, links and phase labels are retained from the original vector diagram.

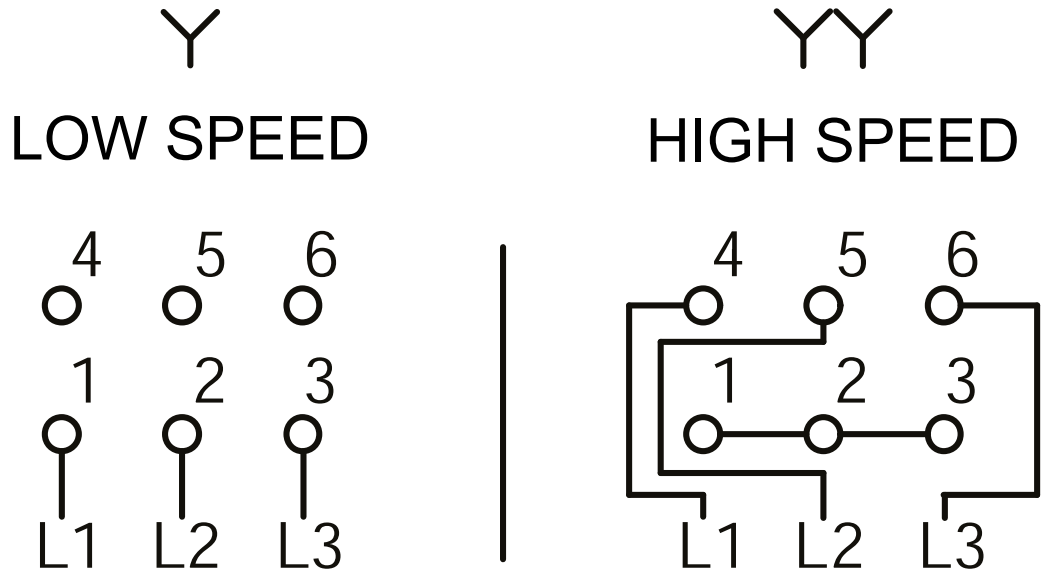

VLF-CC 50N / 400 V / 3 PHASE / 50 Hz / 4-8 POLES

This diagram is supplied for VLF-CC 50N. Wiring, supply voltage and phase data for 70N and 90N are not supplied in The available data catalogue; obtain the selected motor connection sheet for these models.

CEILING SUPPORTS & AIR PATH

Provide suitable ceiling supports and maintenance access. Keep the intake and jet discharge clear. Coordinate fan locations and airflow direction with the car park ventilation design and smoke-control project requirements.

Isolate the supply before installation or inspection. Emergency operation, motor protection and switching follow the supplied unit documentation and project specification.

VLF-CC

Centrifugal car park jet fans

F300°C / F400°C

VOLTVENT®
VENTILATION SYSTEMS

info@voltvent.com | voltvent.com