VOLTVENT®
VENTILATION SYSTEMS

VRS SERIES

Single inlet centrifugal fans

VRS

FORWARD-CURVED IMPELLER

CAST-ALUMINIUM SCROLL CASING



290-600
Nominal airflow / m^3/h

03
Models in the range

50 Hz
Single-phase AC

info@voltvent.com | voltvent.com

01 / PRODUCT OVERVIEW

Rigid casing. Compact airflow.



01 Single-inlet centrifugal design

A forward-curved centrifugal impeller operates inside a rigid cast-aluminium scroll casing. The standard fan is shown with its protective inlet guard, without the optional boiler accessories.

02 Rectangular discharge flange

The rectangular flange connects to equipment or ductwork. Check the drawing dimensions when designing the connection; nominal listed profiles may differ.

03 Ventilation and combustion air

For local cooling, heating systems and combustion-air supply. Optional configurations for solid-fuel and pellet boilers are shown on page 3.

SELECTION & PERFORMANCE

Choose the airflow and pressure.

Select each model using its individual static-pressure curve. Nominal input power, speed, current and airflow are ratings; operating values vary with duty. Compatible voltage regulation is available for speed control; the catalogue curves represent the supplied fixed-speed 50 Hz data.

Selection parameter	Technical overview
Nominal airflow range	290-600 m^3/h
Nominal input power	85-200 W
Electrical supply	230 V / 1 phase / 50 Hz / 2 poles
Motor insulation / protection	Class B / IP44 / TEAO / IE1
Operating / transported-air limit	-20 to +40 °C / max. +40 °C

Performance data. Observe the motor nameplate and supplied connection diagram.

02 / BOILER ACCESSORIES

Configured for boiler air supply.

VRS can be supplied with optional accessories for solid-fuel and pellet boilers.

STANDARD FAN



BOILER ACCESSORY CONFIGURATION



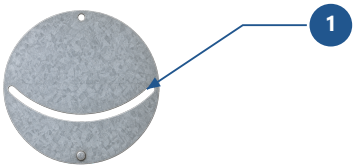

1 Manual inlet regulator

Sheet-metal plate for manual adjustment of the inlet opening. Optional mounting orientation can be selected to suit the installation.



2 Power cable assembly

A pre-assembled cable can be supplied with the accessory configuration. Cable length and connector specification are selected for the equipment.



3 Flange gasket

Placed between the discharge flange and the mating equipment to help protect the contact surfaces during mounting.

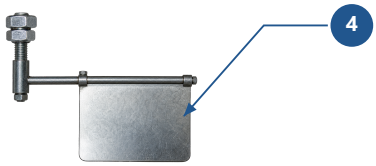

4 Air-operated discharge flap

Opens under airflow while the fan is running and closes when airflow stops. Available as an optional accessory.

Optional accessories are specified for the selected model and boiler connection. Illustrations show configuration examples. For combustion-air supply; maximum transported-air temperature +40 °C.

03 / TECHNICAL DATA

Compare the three models.

NOMINAL RATINGS / 230 V / 1 PHASE / 50 Hz

Model	Input W	Airflow m^3/h	Speed rpm	Current A	Weight kg
VRS 120-60	85	290	2400	0.38	2.8
VRS 140-60	138	485	2300	0.61	3.4
VRS 160-60	200	600	2250	0.88	4.3

Airflow is the nominal maximum, not a selected duty point. Input power, current and speed are nominal ratings; operating values vary with duty. The VRS 120-60 nominal airflow is 290 m^3/h; its curve ends at 289.68 m^3/h.

CONNECTIONS & ACOUSTIC REFERENCES

Model	Nominal discharge profile / mm	Drawing opening H x E / mm	Sound pressure dB(A) / 3 m	Capacitor µF / V
VRS 120-60	80 x 49	75.5 x 50	45	2.5 / 400
VRS 140-60	79 x 78	79.5 x 79	47	4 / 400
VRS 160-60	93.5 x 90	93.5 x 90	50	6 / 400

Nominal profile and drawing opening are separate selection datas. They differ for VRS 120-60 and 140-60; confirm the actual flange before making a mating connection. Sound pressure is a selection data at 3 m; sound power and octave-band spectra were not supplied.

All models: two poles / Class B / IP44 / TEAO / IE1 / S1. Maximum transported-air temperature: +40 °C. Operating range: -20 to +40 °C. Capacitor voltage is the component rating; supply remains 230 V.

04 / AIR PERFORMANCE

Fan Performance Curves

VRS 120-60

230 V / 1 phase / 50 Hz / 85 W nominal

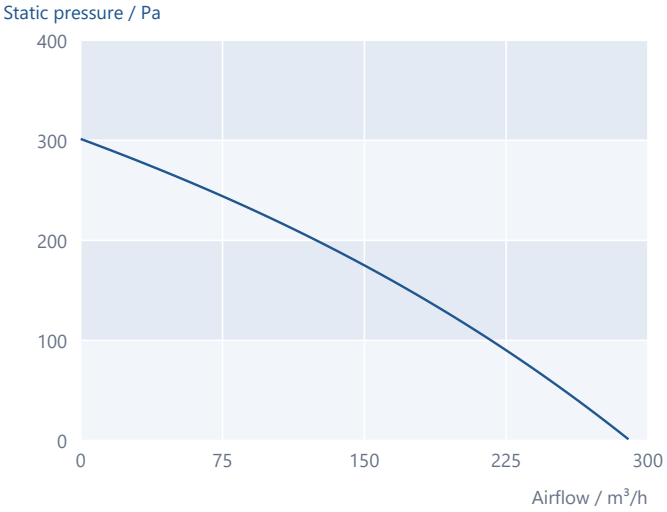

VRS 140-60

230 V / 1 phase / 50 Hz / 138 W nominal

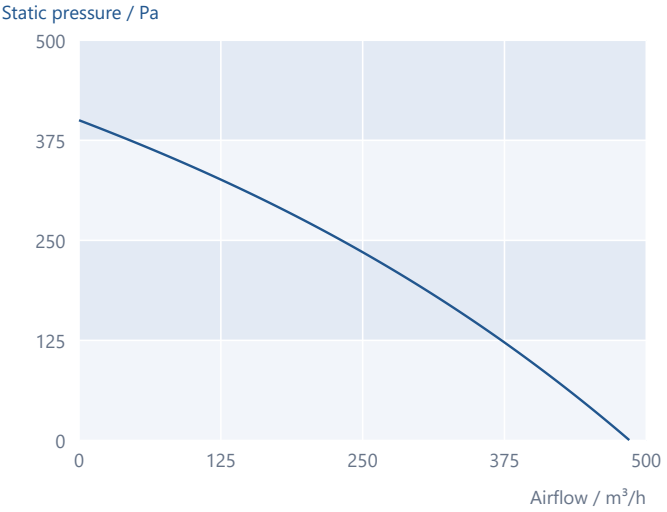

VRS 160-60

230 V / 1 phase / 50 Hz / 200 W nominal

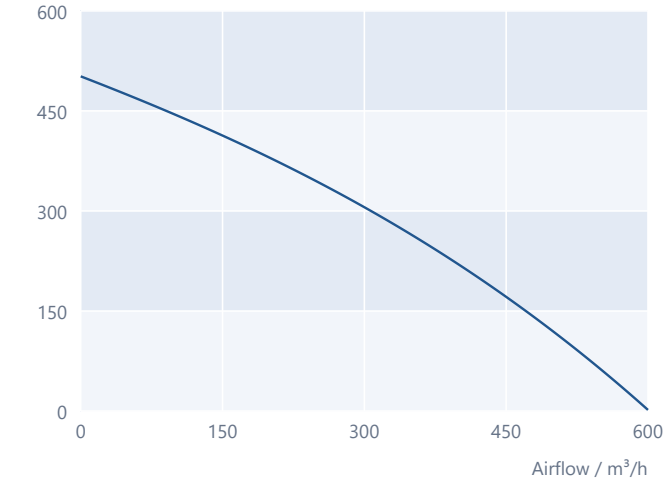

READING THE CURVES

Select the duty point.

Locate the required airflow and static pressure on the model curve. Verify the operating motor values in the selection software and allow for losses in the connected system.

Supply: 230 V / 1 phase / 50 Hz. Curves remain inside their supplied airflow domains.

Model-specific scales. Listed static-pressure curves follow the data within their supplied airflow domains, with no extrapolation or rescaling. Nominal table ratings and selected operating values are distinct.

05 / DIMENSIONAL DATA

Plan the discharge connection.

ORIGINAL SERIES DRAWING / A-H, J-N

All dimensions in mm

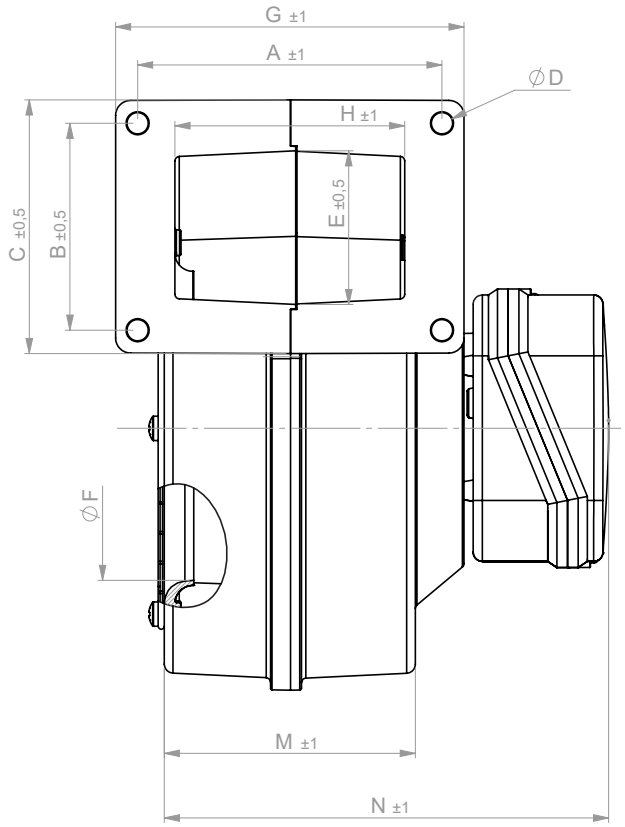

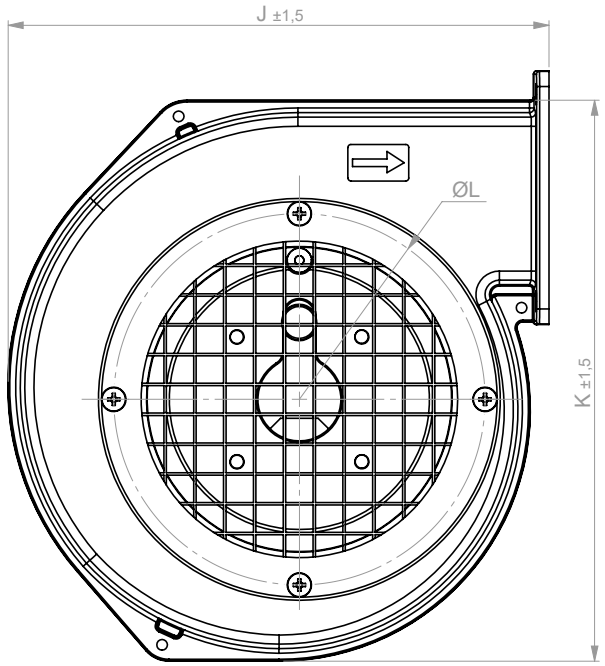

Model	A	B	C	D	E	F	G	H	J	K	L	M	N
VRS 120-60	99.5	68	83.5	7	50	101	115	75.5	178	184	122	82.5	146
VRS 140-60	123	84	122	7	79	110	154	79.5	203	223	150	86	138
VRS 160-60	114	104	123	7	90	117.5	130	93.5	229	256	164	100.5	142

Product vector drawing; listed tolerances and labels are preserved. H x E defines the drawing opening and may differ from the nominal discharge profile. Confirm the actual unit flange before installation. All dimensions follow current FSP records.

06 / INSTALLATION & MOTOR

Prepare the installation.

01 Mounting and airflow

Use the model-specific drawing dimensions. Confirm the actual rectangular flange where nominal profile and H x E differ. Secure the cast-aluminium housing to a rigid support and keep airflow paths clear. Specify optional boiler accessories with the order.

02 Electrical configuration

All three models use 230 V single-phase, 50 Hz AC motors with two poles. Match the capacitor to the model: 2.5, 4 or 6 microfarads, rated 400 V.

03 Speed control and duty

Compatible linear voltage regulation can be used for speed control. Confirm controller suitability for the motor. Motor data: Class B, IP44, TEAO and IE1. Continuous duty is S1.

04 Inspection and servicing

Isolate the supply before servicing. Clean the impeller and inlet guard, inspect the casing and flange fixings, and keep motor cooling paths clear.

OPERATING LIMITS

Maximum transported-air temperature is +40 °C. Operating range is -20 to +40 °C. Use the actual motor nameplate and the connection diagram on the next page for the supplied unit.

07 / ELECTRICAL CONNECTION

Single-phase connection.

VRS / 230 V / 50 Hz - SUPPLIED WIRING DIAGRAM

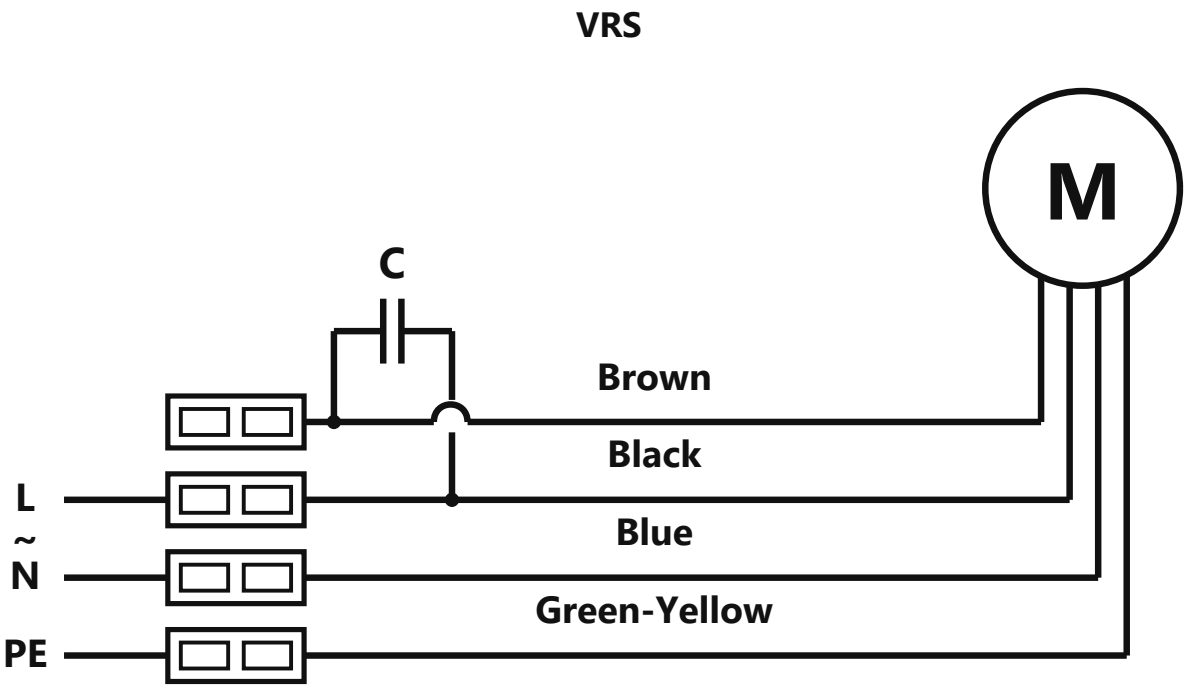

CONNECTION KEY

Marking	Function
L / N	Line / neutral
PE	Protective earth / green-yellow
C	Motor capacitor / see model table
M	Motor

Conductor colours and connection topology follow the user-supplied VRS drawing. Labels are in English. Confirm the actual unit nameplate and supplied terminal diagram before connection; electrical work must be performed by qualified personnel.

VRS

Single inlet centrifugal fans

VOLTVENT®
VENTILATION SYSTEMS

info@voltvent.com | voltvent.com