The Mason System

Initial Impact Testing on a New Head and Neck Protection System

CLIENT: ***Mason Enterprises Athletic Equipment LLC***

PREPARED BY: Catherine Barnes
Biomedical Engineer

SPARK
product development

May 12, 2016

INTRODUCTION

With 100-g impacts (or greater) a commonplace on the football field, there is an extreme need for a better way to redirect the energy responsible for so many concussions and head injuries. The following statistics support this.

- Although death from a sports injury is rare, the leading cause of death from a sports-related injury is a brain injury.
- 3,800,000 concussions were reported in 2012, double what was reported in 2002.
- Cumulative concussions are shown to increase catastrophic head injury leading to permanent neurologic disability 39% of the time.
- 33% of high school athletes who have a sports concussion report two or more in the same year.
- 47% of all reported sports concussions occur during high school football.
- An estimated 5.3 million Americans live with a traumatic brain injury-related disability (CDC).

Mason Enterprises Athletic Equipment LLC (MEAE)

MEAE is an Ohio based company that has developed and been issued a utility patent for its head and neck protection system (The Mason System – TMS), as shown in Figures 1 and 2. It is designed to significantly reduce head trauma through the elimination of blunt force contact with the head and neck through energy redistribution to the torso. This is achieved through patented design which allows for full range of motion of the head and neck without making contact with the helmets exterior protection shell which is adhered to the structural cavity of the shoulder pads. Upon collision, direct impact with the head and neck are eliminated and the energy is transferred through the torso.

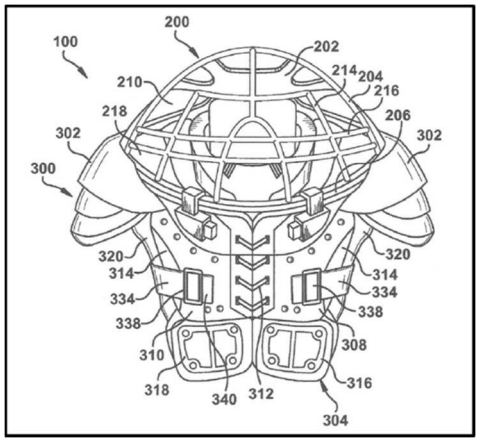

Figure 1. *Illustration of The Mason System from utility patent.*

Figure 2. *Potential design of The Mason System.*

METHODS AND MATERIALS

Fixtures

A lifelike punching mannequin was fixed to a rigid structure via a 6” x 6” x 48” wood post secured through the middle of the mannequin up to the upper chest. The rigid structure consists of a physical pendulum, 73½” long, designed up to make impact with the mannequin’s head when it is dropped (Figures 3 and 4). The structure is pushed against a concrete wall to prevent travel during impact. The overall weight of the pendulum is 21 lbs (the rod assembly is 16 lbs and two 2½ lbs weights are placed on the elbow of the rod).

A very simple simulated brain system was constructed in the head of the mannequin as shown in Figures 4 and 5. It consists of a standard PVC pipe, 1¼ pipe size, and a 1¼” diameter silicone rubber cylinder (60 A durometer, 5½ oz weight) lubricated with mineral oil and inserted into the pipe. The PVC pipe end cap has a flat metal disc secured within it to provide the hard surface on which the Tekscan wireless FlexiForce® WB201-M sensor is taped. A distance of ⅝” is between the tip of the silicone cylinder and the sensor surface when the silicone cylinder is at the starting position (i.e. pushed back away from the skull end).

Figure 3. *Impact testing fixture with mannequin secured in place.*

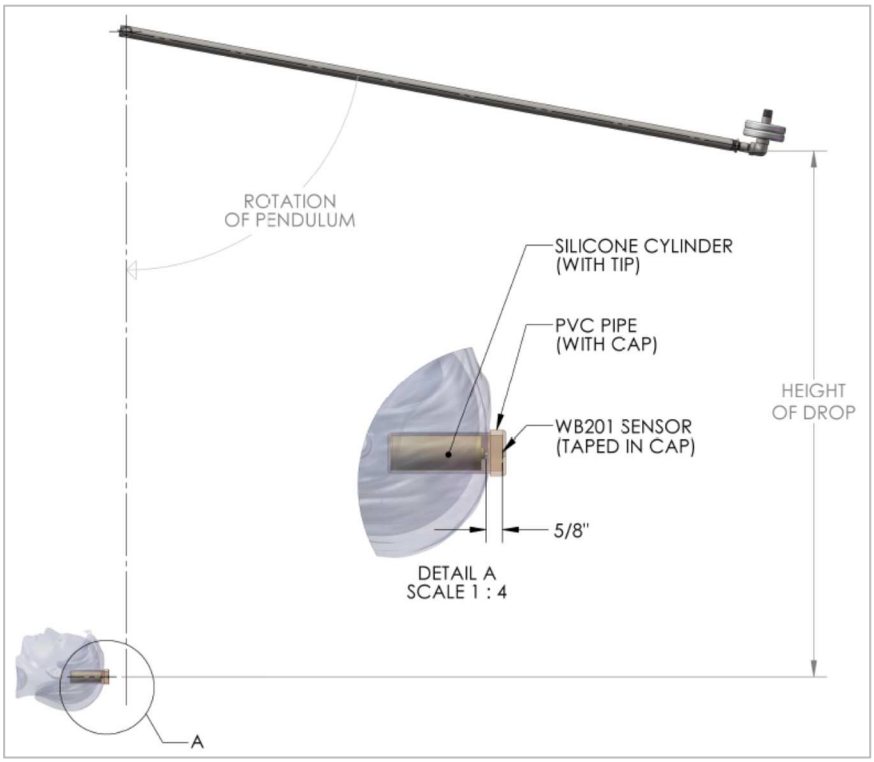

Figure 4*. Design of impact testing fixture (physical pendulum) and simple simulated brain system (shown in Detail A).*

Figure 5. *Simple simulated brain system with wireless sensor assembly shown.*

Impact Testing

The pendulum was raised to a vertical height of 60¾" from the axis of the PVC pipe and released to freely swing down and hit the mannequin. Both the traditional helmet and The Mason System were assembled onto the mannequin's head for two separate series of impact testing (Figures 6 and 7). Upon impact of the pendulum with the protective head gear, the silicone cylinder moved within the pipe and hit the force sensor. This force was recorded with the Tekscan Wireless Economical Load and Force System (WELF) software version 4.32 high speed. Peak force measurements were determined and averaged.

Figure 6. *Fixture for impact testing: mannequin shown with a traditional helmet.*

Figure 7. *Fixture for impact testing: mannequin shown with The Mason System.*

RESULTS

The average peak forces observed for the impact testing of the protective gear from the two series of testing are shown in Figures 8 and 9; five data points and seven data points for each type of protective gear were analyzed for the first and second series of testing, respectively. There was a much larger peak impact force recorded within the simulated skull cavity of the traditional helmet tests compared to the peak impact force recorded within the simulated skull cavity of The Mason System. The Mason system demonstrated approximately 84% lower peak force and 76% lower peak force incurred by the simulated brain-skull impact for the first and second series of tests, respectively, compared to the traditional helmet.

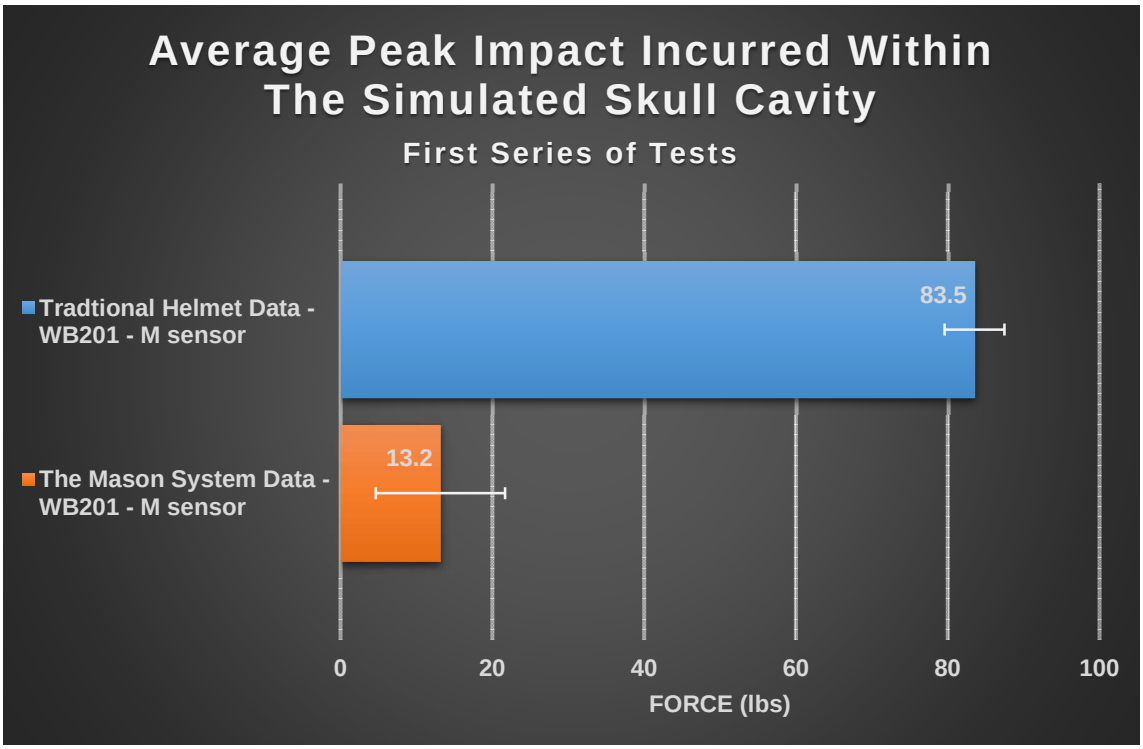

Figure 8. *Summary of peak force data from the first series of tests. [Frame rate in Tekscan software: 2500 Hz.]*

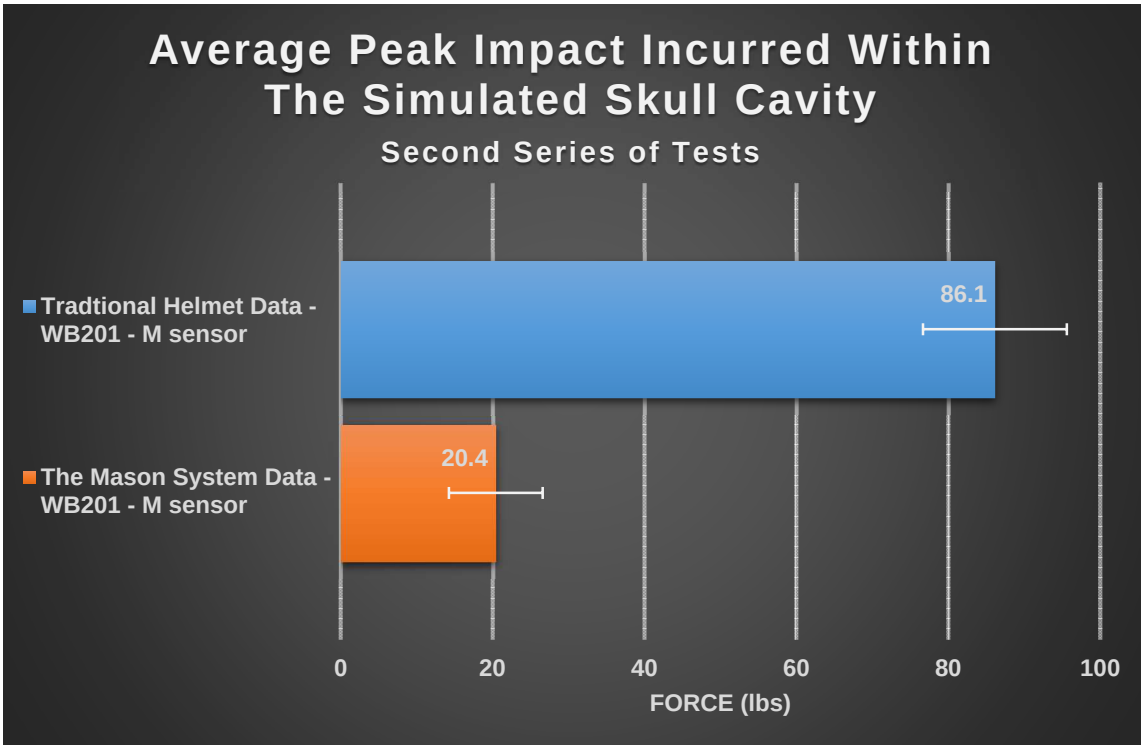

Figure 9. *Summary of peak force data from the second series of tests. [Frame rate in Tekscan software: 4000 Hz.]*

RAW DATA

The raw data for the peak force values is given in Table 1.

Table 1. *Peak force recorded for each test of the protective gear.*

		Traditional Helmet		The Mason System	
First Series	Test 1	80.72	lbs	9.65	lbs
	Test 2	86.87	lbs	6.14	lbs
	Test 3	88.62	lbs	7.90	lbs
	Test 4	81.60	lbs	27.20	lbs
	Test 5	79.85	lbs	14.92	lbs
	Average	**83.53**	**lbs**	**13.16**	**lbs**
	Std. Dev.	**3.94**	**lbs**	**8.51**	**lbs**
Second Series	Test 1	93.79	lbs	23.82	lbs
	Test 2	93.79	lbs	16.38	lbs
	Test 3	92.30	lbs	29.77	lbs
	Test 4	77.41	lbs	23.82	lbs
	Test 5	80.39	lbs	13.40	lbs
	Test 6	71.46	lbs	22.33	lbs
	Test 7	93.79	lbs	13.40	lbs
	Average	**86.13**	**lbs**	**20.42**	**lbs**
	Std. Dev.	**9.47**	**lbs**	**6.18**	**lbs**

Special Note

SPARK Product Development LLC connects innovation with specialized execution, and thrives on exploring viability and producing detailed designs for real manufacturability. We have a collaborative team of product developers with deep competencies in mechanical engineering, industrial design, 3D computer-aided design (including organic surface modeling), design for manufacturing and assembly (DFMA) including preparation of tool-ready designs and documentation, and rapid prototyping.