International Journal of Futuristic Trends in Engineering and Technology
ISSN: 2348-5264 (Print), ISSN: 2348-4071 (Online)
Vol. 3 (06), 2016

# System for Remote Monitoring and Control of Baby Incubator and Warmer

(Paper ID: 36ET3005201604)

Ms. Nidhi Y. Agresara
*Scholar (M.E. Comm. Engg.)*
*Darshan Insti. of Engg. & Tech.*
*Gujarat Technological University*
*agresaranidhi@gmail.com*

Dr. Divyang D. Vyas
*Professor, Dept. of E & C*
*Darshan Insti. of Engg. & Tech.*
*Gujarat Technological University*
*divyang.vyas@darshan.ac.in*

Prof. Bhavesh S. Bhensdadiya
*Asst. Professor, Dept. of E & C*
*Darshan Insti. of Engg. & Tech.*
*Gujarat Technological University*
*bhavesh1pt@gmail.com*

***Abstract*:** Incubators and radiant warmers are used for intensive care of the new born, premature or sick baby. The incubator environment provides a homogeneous, sterile and stable temperature, a relative air and body temperature that are needed especially for intensive care of the premature baby. Incorporating Remote patient monitoring in chronic disease management can significantly improve an individual's quality of life. It allows patients to maintain independence, prevent complications, and minimize personal costs. Infant incubator is used mainly to keep a baby's core temperature stable at 37 degree Celsius. The core temperature of the human body needs to be kept at a constant temperature of 37 degree Celsius because the temperature goes too high or too low, then the organs can be damaged and illness or death can result. Thus, body and surrounding temperature as well as other parameters of newborn infant needs to be monitored remotely and controlled.

In the proposed system air temperature in incubator is monitored and controlled. In addition to this important parameters like body temperature, heart rate, SPO2 level and humidity level are continuously monitored. In the system monitoring and controlling is possible both locally as well as remotely. For local monitoring and control touch screen LCD display is available. The system is connected to local area network and internet that enables remote monitoring. Web portal is designed using which doctor and nurse can login at a remote place individually and monitor real time parameters of patient. Moreover, Doctor can also suggest precautions and medicines to patient using this web portal. The system has been designed using Arduino microcontroller, various sensors for measuring body parameters like temperature, heart rate, SpO2, etc. serial to Ethernet converter and GSM modem.

***Keywords*: *Remote health monitoring, baby incubator, embedded system, Arduino.***

## I. Introduction

Health monitoring systems become a hot topic and important research field today. Electronic Patient Records and sensor networks for the patient monitoring are at the current forefront of new technologies.

Remote patient monitoring (RPM) is a technology which is used to monitoring of the patient from the remote place or outside the patient's room or conventional clinical setup. Advantages of remote patient monitoring are:

- Increase access to care
- Monitoring many patients at a time.
- Decrease health delivery costs etc.

An incubator and warmer machine is a very useful medical device which is used to maintain and regulate an appropriate environment for the newborns. To maintain and control the temperatures and humidity level in the newborns, baby incubator and warmer is required.

## II. Motivation

Most of existing technology's incubator and warmer machine shows a value of temperature and other vital parameters on the local display in digital form and these parameters can be set as per our requirement but generally existing machine cannot able to send these parameters at remote place and control it from remote place. Some of the machines are available with the features of remote monitoring but their tentative cost is near about 50 thousand rupees/piece. Now a day's use of incubator and warmer machine increasing, so it is needed to develop a low cost design.

## III. System Architecture

Any biomedical controlling and remote monitoring system consists of bio-sensors, control system unit based on controller unit, communication gateway and central monitoring system with web server. The system is mainly composed of various types of sensors which is used to measure vital parameters of newborn. The system for controlling and monitoring the sensed temperatures, humidity, Heart rate & SpO2 data and transmit all parameter at remote place using RS232 to Ethernet converter. The web based remote monitoring & controlling system is to be designed and monitoring and controlling can be done by PC/Laptop or mobile phone which support internet facility. The system architecture is shown in the Fig.1.

The main functions of the system are:

1. To sense the temperatures, humidity, SpO2 & Heartbeat of the infant continuously and display it on to the local display (Touch screen LCD), as well as to set the temperatures, humidity, SpO2 & Heartbeat as per requirement, by the control unit.
2. To transmit the sensed and set point values of temperatures, humidity, SpO2 & Heartbeat over LAN by help of RS232 to Ethernet converter.
3. To display current value and set point value of temperatures, humidity, SpO2 & Heartbeat on to the GUI using local area network.

4. To transmit current values and set point values of temperatures, humidity, SpO2 & Heartbeat at the remote place via web server.
5. To monitor the current values and set point values temperatures, humidity, SpO2 & Heartbeat by help of specially designed website for this system using PC, laptop or mobile phone which support internet facility.

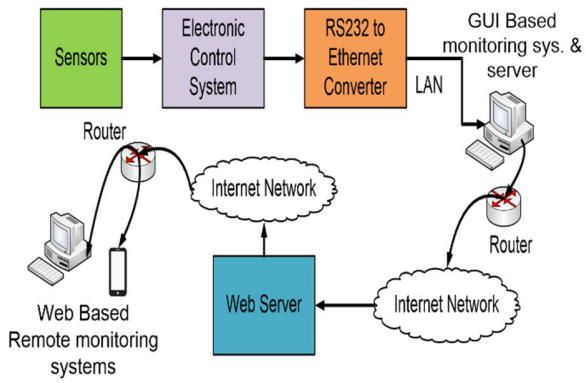


Fig. 1. System Architecture

## IV. System Hardware Design

The control system mainly consists of Arduino Mega 2560 microcontroller, sensors like air & body temperature sensors and humidity sensor. Present system also consist Touch screen LCD to display and set air & body temperature and humidity as well as to display set points of air & body temperature and humidity which is helpful to the doctor and nurse to monitor infant's air & body temperatures and humidity locally means where immature infants are kept. Present system also consist a buzzer as an Alarm system. It also have heater and heating control system, RS 232 to Ethernet converter and specially designed GUI / Web Page for remote monitoring purpose. The designed control system block diagram is shown in the Fig. 2.

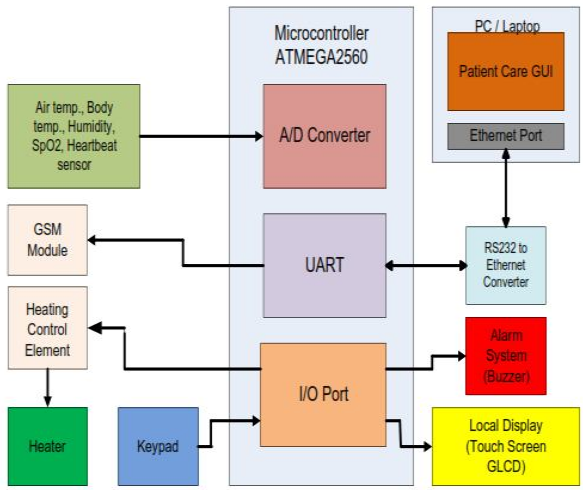


Fig. 2. Block Diagram of the System

The functionality of each blocks of the control system is explained as below:

### *A) Sensors*

This designed system mainly consists of three kind of sensors; 1) Air temperature sensor 2) Body temperature sensor and 3) Humidity sensor

*1. Air temperature sensor*

For present work SEN-1853 is selected as an air temperature sensor with steel head, uses NTC thermistor (10K).

*2. Body temperature sensor*

For present work as a body temperature sensor LM35 is selected on a basis of its characteristics of linearity, accuracy, and low self-heating capability.

*3. Humidity sensor*

The humidity sensor chosen for this work is SY-HS-220.

*4. SpO2 (Pulse Oximeter) sensor*

The humidity sensor chosen for this work is DS-100A.

*5. Heartbeat sensor*

The humidity sensor chosen for this work is HW01.

### *B) Microcontroller unit*

For present system Arduino Mega 2560 microcontroller is used for couple of reasons that, it have inbuilt analog to digital converter and EEPROM. Also its cost is less compare to other DSP controller.

### *C) Alarm system*

As an alarm system buzzer is used. An alarm raise if the any measured parameter goes beyond the set point value and it gives indication to the concern doctor or nurse.

### *D) Display*

For proposed work 3.2" inch touch screen GLCD is used. Touch screen shield is used for interfacing of touch screen GLCD with Arduino Mega 2560 board. It requires because of GLCD works on 3.3V and Arduino board produce output 5V on its digital I/Os so for the purpose of level converter shield is used.

### *E) RS232 to Ethernet Converter*

WIZ110SR is a gateway module that converts RS232 protocol into TCP/IP protocol. Current values and set point values of the temperatures and humidity are converting in to the serial form using UART & RS232 by the control system and give this converted data to the WIZ 110SR module. [9]

This converter is needed because we want to transmit data over LAN as well as over internet network, so first of all it is required to convert RS232 protocol into the TCP/IP protocol for long distance transmission. WIZ110SR module is shown in Fig. 3.


Fig. 3. WIZ110SR Module [9]

*F) Keypad*

As a keypad push button switches are used. Four switches are used to set the values of temperatures and humidity as per requirement. Out of four switches one is used as set switch which enable the function to increase or decrease the set point values, second one is used to increase set point values, third one is used to decrease the set point values and fourth one is used to enter changed set point values.

*G) GSM Module*

A GSM modem (SIM900A) is a specialized type of modem which accepts a SIM card, and operates over a subscription to a mobile operator, just like a mobile phone. From the mobile operator perspective, a GSM modem looks just like a mobile phone.

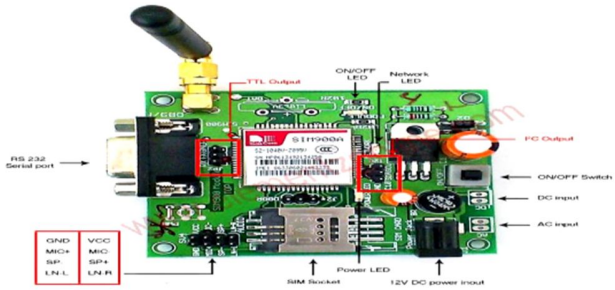


Fig. 4. GSM Module [10]

When a GSM modem is connected to a computer, this allows the computer to use the GSM modem to communicate over the mobile network. While these GSM modems are most frequently used to provide mobile internet connectivity, many of them can also be used for sending and receiving SMS and MMS messages.

*H) Heater*

Heater in machine is used to irradiate infant with light in the near-infrared (NIR) spectrum (from 700 to 1,400 nm). So heater is used to keep infant warmth. Here we have used bulb as heating device.

*I) Heating control system*

In incubator and warmer, it is necessary to maintain heater temperature constant as per requirement. If the temperature goes beyond certain limit then it is very harmful for the infant. So in machine temperatures and humidity should be control precisely.

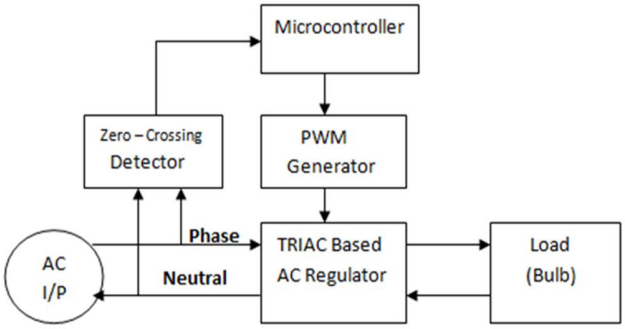


Fig. 5. Block Diagram of PWM Based Heating Control System [11]

In present system heating control system is designed based on firing angle control of TRIAC. As an alternative to ON-OFF relay based control method, burst firing control method is used to operate heater. In phase/firing angle control, a gate pulse is sent to the TRIAC. This is sent at a time between one zero crossing and the next. Without the gate pulse sent to the TRIAC, right after zero-crossing, the TRIAC is OFF and no current flows through it. After a certain time, the gating signal is given to the TRIAC and it turns ON. The TRIAC then stays ON until the current through it becomes zero (natural line commutation). This is at the next zero crossing. It is must require that current through the TRIAC is higher than the latching current and the holding current means that the TRIAC stays ON once it is fired on. It stays ON until the current through it is zero. This means that the voltage is supplied to the load for a fraction of the cycle, determined by how long the TRIAC is ON. How long the TRIAC is ON is, determined by the delay time between the zero-crossing and the applying of the TRIAC gating signal. The gating signal is removed 250µs after that. 250µs is enough time to ensure that the TRIAC has turned on. Even though the gating signal is removed, the TRIAC stays on until the next zero-crossing as it is a latching device. [11]

## V. System Software Design

Two kind of software are used, one is Arduino IDE which is used to do programming for control system of Incubator & warmer and second one is visual studio 10 is used to do programming of GUI (Graphical User Interface) for monitoring various parameters from the remote place. Flow chart for the programming of the control system of baby incubator and warmer is shown as below Fig. 6.

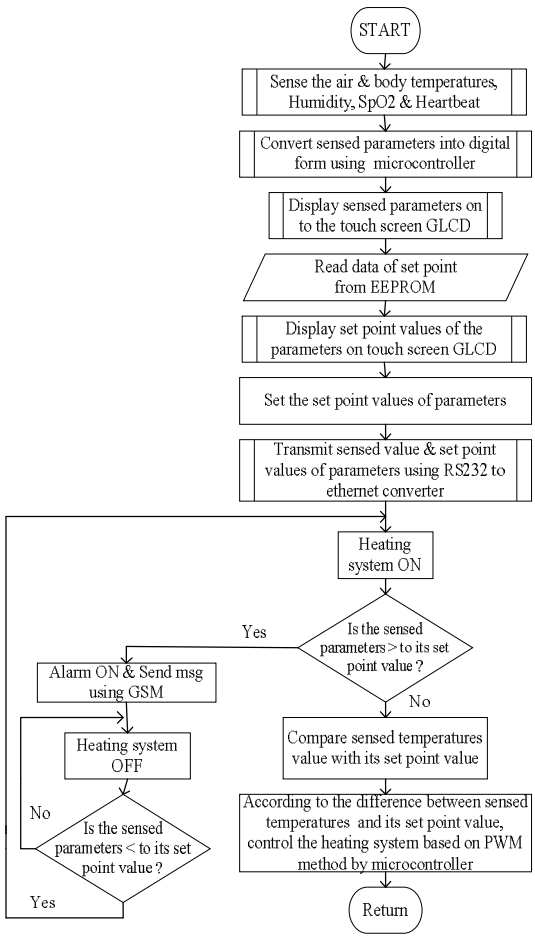


Fig. 6. Flow chart of the control system

## VI. Proposed Design For GUI / Web Page

The complete GUI is to be develop using visual studio 10. Visual studio is a specialized software for designing graphical user interface as per requirement. The proposed GUI will be able to create database of the previous sensed and set point values of temperatures, humidity, SpO2 and Heartbeat. Proposed GUI is to be access to monitor real time data over LAN on to the PC or laptop. The SQL web server and dedicated website can be created so that it is possible to access real time data from the remote place at any time.

The features chart and different windows of the GUI / Web Page are shown in below Fig. 7.

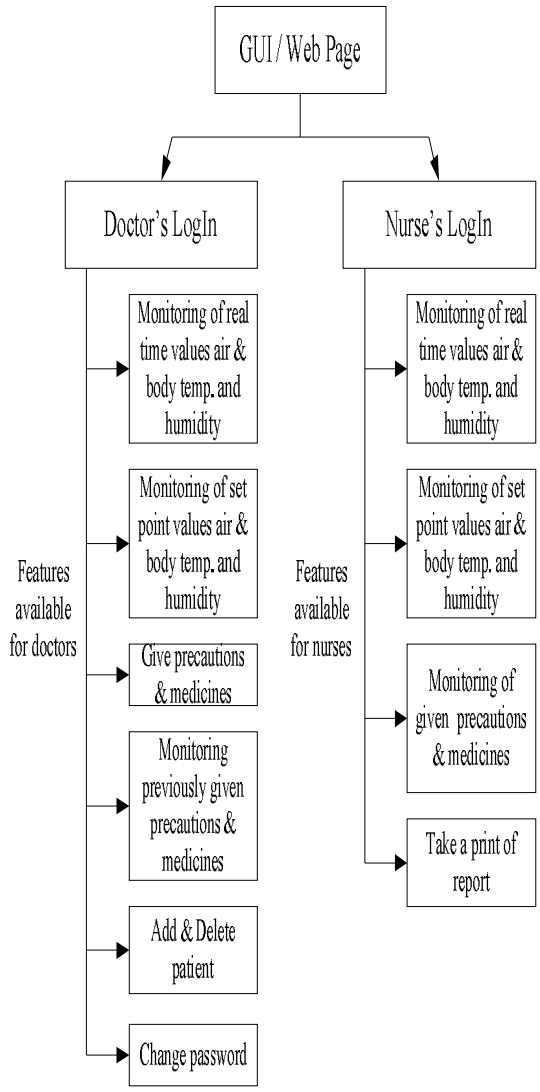


Fig. 7. Features Chart of the Proposed GUI / Web Page

## VII. System Implementation & Results

As a result of experiment, it can be said that concern doctors and nurses are able to monitor the real time data of the infant. The data of measured and set point values of an air temperature, a body temperature and humidity are update continuously and it can be monitor from the remote place.

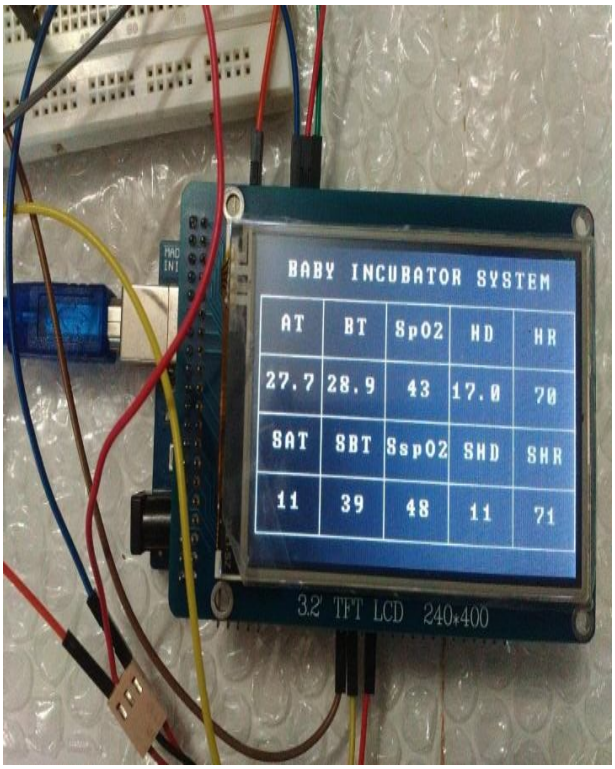


Fig. 8. Touch Screen GLCD interfacing with Arduino

**Transmission of Data using WIZ110SR Module**

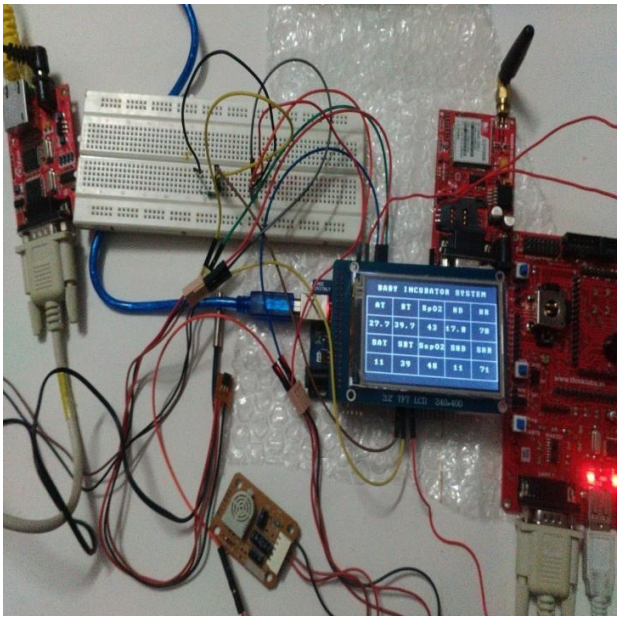

Fig. 9. Designed Control System with WIZ110SR Module

Transmit any detected vital parameters data serially using uNiBoard version 1.1 (Arduino mega 2560 microcontroller board) and WIZ110SR (Serial to Ethernet board) and receive the same data as transmitted on to the Hyper Terminal in the PC. Complete setup is shown in the Fig. 9

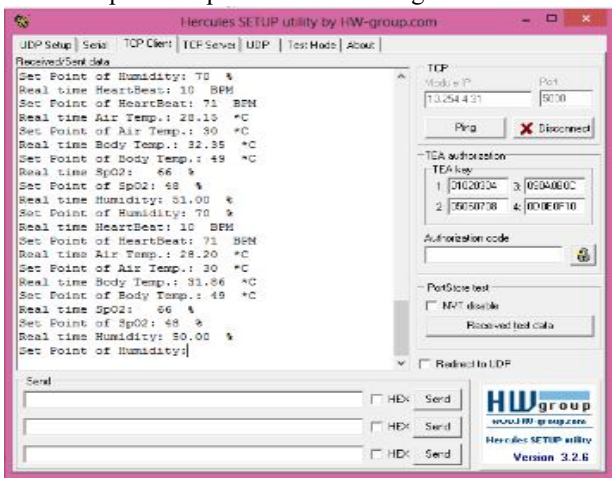


Fig. 10. Detected Parameters on to the Serial Monitor

## VIII. CONCLUSION

In this work design and implementation of system for incubator and warmer for an infant has been discussed also different hardware and software unit of the system is described.

The main purpose of the whole development is to reduce the cost of control unit for incubator and warmer to provide remote monitoring and controlling facility to the doctors and nurses using LAN as well as internet network. The result are presented which are quite satisfactory. Moreover in this system touch screen GLCD is used which makes system more interactive and attractive for the user. In presented system GSM module and Alarm system are used to send message to the doctor when any parameters goes beyond its set point value so that doctor can take immediate action.

The designed system can able to transmit real time and set point values of vital parameters over LAN through serial to Ethernet converter for remote monitoring and controlling purpose. Advantage of the remote monitoring system is to increase access to care and doctor can monitor patient from the remote place at any time.

## REFERENCES

[1] R. Cichocki, R. O'Laughlin, A. Midouin, B. F. Busha, "Transportable Infant Incubator for Developing Countries", IEEE 978-1-4673-1142, Dec 2012.

[2] Mohamed zahran, Mahmoud Salem, Yousry attia and Arefeliwa,"Design and Implementation of a Digital Control Unit for an oxygenaire Servo Baby Incubator", Journal of Power Electronics, Vol. 8, No. 2-2, April 2008.

[3] Zinat Ara nisha, AHM fazle elahi. "Low Cost Neonatal Incubator with Smart Control System"

[4] N.A.A Hadi, M.H.C. Hasan, N.M.Z. Hashim, N.R. Mohamad, A.S. Rahimi, K.A.M. Anuar. "Temperature Monitoring System for Infant

Incubator Using Arduino" International Journal for Advance Research in Engineering and Technology, Volume 3, Issue VI, June 2015

[5] Ruilan Wang, "The design of temperature and humidity control system in multi incubators based on single-chip microcomputer", School of information and control engineering, Weifang university, Shandong Weifang, China, IEEE 978-1-4577- 05366/11/2011.

[6] Balraj A, Renuka Devi V, Prof. Amit Patvardhan, Aiswarya R, Prasen V, "Embedded Temperature Monitoring and Control Unit", IEEE International Conference on Recent Trends in Information, Telecommunication and Computing, 2010.

[7] "Phoenix Medical Systems (P) Ltd." www.phonenixm++edicalsystem.com

[8] "Perlong Medical Equipment Co., Ltd." http://perlong.en.madeinchina.com

[9] "WIZ11OSR User"s Manual (Version 2.1.0)" www.rhydolabz.com

[10] "SIM 900A GSM Modem" http://www.ebay.com/itm/SIM-900A-GSM-MODEM-RS232-TTL-I2C-CP2102-USB-to-SERIAL-UART-CONVERTER-MODULE-/271544211489

[11] "AC power control: Adjustable phase angle control with TRIAC using ATmega8" tahmidmc.blogspot.com.