3D Printed Rocket Engine for Low Earth Orbit Payload Delivery Systems

Stratodyne Aerospace, Victoria, British Columbia, Canada. June 2013

FIGURE 1: THE ARMSTRONG 1 ENGINE

Abstract

Stratodyne Aerospace has designed a 3D printable rocket engine capable for use in a vehicle used to get a 10kg payload into low earth orbit. Design of the "Armstrong" engine is for the 2013 Open Source Collaborative 3D Printed Rocket Design Challenge organized by DIYROCKETS and Sunglass. This document outlines the design decisions and avenues taken by Stratodyne Aerospace.

Making optimal use of 3D printing technologies provided by Shapeways.com, the Armstrong engine has been developed from the ground up to be simple, inexpensive, and reliable. Numerical analysis was performed to ensure the engine would perform as expected, without failure due to pressure gradients or chamber wall fatigue.

A launch system has been developed alongside to ensure the engine is able to attain all of its design requirements. Each engine produces 4.5 to 5.3 kN of thrust, with a specific impulse ranging from 268 to 318 s.

Contents

Introduction

3D Printable Rocket Engine Challenge

The 2013 Open Source Collaborative 3D Printed Rocket Design Challenge organized by DIYROCKETS and Sunglass is a collaborative competition aiming to promote design innovation and cost effectiveness in rocket engine design. By making use of advancements in 3D printing technology, participants are challenged to design a low cost, effective rocket engine to launch a small payload of 0.5 to 10 kg into low earth orbit. This document outlines team Stratodyne's plans for a low cost, high reliability launch engine.

Team

Stratodyne Aerospace is a group of three mechanical engineering students at the University of Victoria, in British Columbia, Canada. The team consists of Michael Pearson, Harry Evans, and Simon Moffatt. Despite the fact that UVic does not have an aerospace program, the three of us are very passionate about the industry and strive to complement our educations by furthering our aerospace engineering knowledge.

Mission Profile

The requirements of the competition outline the mission profile required. A payload of 0.5 kg to 10 kg must be placed into low earth orbit approximately 300 to 1000 km in altitude.

Delta-v

Getting to low earth orbit requires a large change in velocity. There are many different contributions to the total delta-v, as outlined below.

The orbital velocity comes from the velocity needed to achieve stable low earth orbit. Delta-v requirements due to gravity are the requirements to overcome the gravity to get into LEO. Atmospheric drag is low, which is one of the advantages of an air launch altitude. Steering losses include orbital path corrections, and are generally small for small vehicles. The Earth rotation and air launch advantages stem from the rotational and relative velocities of the Earth's rotation and the aircraft's velocity. A 5% safety margin is accounted for as well.

The chosen delta-v budget is quite conservative, especially for the nature of the air launch and the relatively small size of the launch vehicle.

Delta-v Component	Delta-v (m/s)
Orbital Velocity	7729.45
Gravity consideration	1195.59
Atmospheric Drag	50.00
Steering losses	68.00
Earth rotation advantage	-402.70
Air launch advantage	-200.00
Safety Margin	105%
Total	**8862.35 m/s**

TABLE 1: DELTA-V TO LEO

Payload

The payload is anything weighing from 0.5 kg to 10 kg. For the purposes of this design challenge, the payload will be set at the maximum of 10 kg. This will ensure proper functionality for all requested payload masses. For further versatility, it would not be difficult to scale the vehicle up to allow for a slightly larger payload of 15kg, to allow launching of Planetary Resource's Arkyd-100 space telescopes into orbit.

Rocket Vehicle

FIGURE 2: THE TENGINE ROCKET VEHICLE

The first point of research performed by the Stratodyne team was to specify launch vehicle mass requirements. Before design of the engine could even begin, a rough estimate of the size and mass of the vehicle was required. Once this was determined, the required thrust of the rocket engine could be calculated, and preliminary engine design could begin.

Air Launch system

The first decision made for the vehicle and engines was to use a pressure-fed pump system due to its reliability and low cost. Although in standard sea level atmosphere the back pressure on the engine exhaust is relatively high, and as such it requires an even higher exhaust pressure. This in turn requires an extremely high chamber pressure, and thus a higher pressurant mass. A pressure-fed system is primarily limited by the weight of this gas, usually helium or nitrogen. It must fill both propellant tanks as well as the pressurant tank itself for each stage, at pressures higher than the chamber pressure. These high chamber pressures are not feasible with pressure fed systems launching from sea level, and thus an air launch system was ultimately chosen. This is very advantageous for a pressure fed rocket engine. With an air launch, the rocket vehicle is lifted into thinner atmosphere, greatly reducing the back pressure on the engine exhaust, making a pressure fed system feasible (Figure 3).

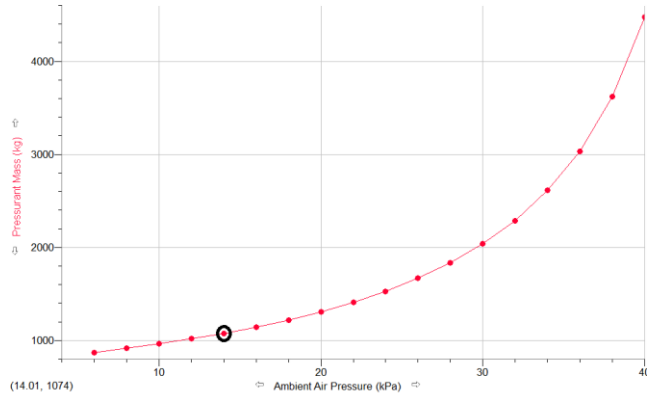

FIGURE 3: MASS OF PRESSURANT VS AMBIENT AIR PRESSURE (ARMSTRONG SYSTEM CIRCLED)

The lower pressurant mass is due to two specific impulse benefits from an air launch. Firstly, at higher altitudes, the Isp of a rocket engine increases. This is a function of atmospheric pressure, which is why vacuum Isp is always considerably higher than that at sea level. Not only does the rocket become more efficient, but the jet aircraft that will fly it to its launch altitude is even more efficient. The Isp of a jet engine can range from 3000 to 8000 s, whereas liquid rocket engines tend to be in the 200 to 300 s range.

Secondly, the gravity and atmospheric drag components of the Delta-V that the rocket vehicle has to overcome is reduced because of the launch altitude being many kilometres above sea level in much less dense atmosphere than it would experience launching from the ground. Not only does the altitude reduce the delta-v, but the velocity that the aircraft has when it releases the rocket also reduces the required delta-v to orbit. By aligning the flight path of the aircraft with the desired orbital

trajectory, the velocity of the aircraft, over 250 m/s, is added to the velocity of the rocket.

WEATHER ADVANTAGE

Because the Gulfstream V is capable of flying at over 15 km altitude, much of the weather restrictions placed on ground launch rockets can be avoided. The aircraft simply flies over the weather patterns and launches the rocket into a clear, blue, sky.

LOCATION ADVANTAGE

Not only is the aircraft used to launch the rocket, but it can also be used to transport the rocket to where ever it needs to be to launch into a desired orbit in a particular launch window. This also has the added advantage of safety to the general public. The rocket can be launched far above the ocean, avoiding the possibility of catastrophic failure and possible damage to property or loss of life caused by the debris.

Orbital Sciences uses a very similar system to the one described above with the Pegasus launch system. Their rocket is much larger with a larger payload capacity, as well as using 3 solid booster stages rather than liquid. The system has been used successfully for 23 years, showing that air launched orbital rockets are entirely feasible.

A single-stage-to-orbit craft is an unreasonable goal for this application. Yet to keep costs low and maintain reliability, fewer stages are better. Therefore, a 2-stage to orbit vehicle is the most cost-effective and simplistic method of achieving the design goals.

NUMBER OF ENGINES

Cost/benefit analysis and optimization was performed to determine the number of engines used on each stage. The decision to use ten engines for the 1st stage and one engine for the 2nd was deemed to be optimal.

There were several factors that brought about the choice of ten engines: including engine cooling, use the same engine for both stages, increased reliability, and simplified first stage vehicle control.

With more engines, each engine is smaller, each therefore requiring a lower mass flow. This reduces the cooling requirements and was deemed necessary to prevent engine failure. This is elaborated upon in the section on engine cooling.

Additionally, the need to design separate engines for the 1st and 2nd stages was eliminated. The small size of the engine is appropriate for use in both stages. Accordingly, the higher manufacturing numbers ensures lower costs and higher reliability.

Finally, by angling the engines slightly, the vehicle is able to produce yaw, pitch, and roll movements by throttling the appropriate engine. This layout is shown below.

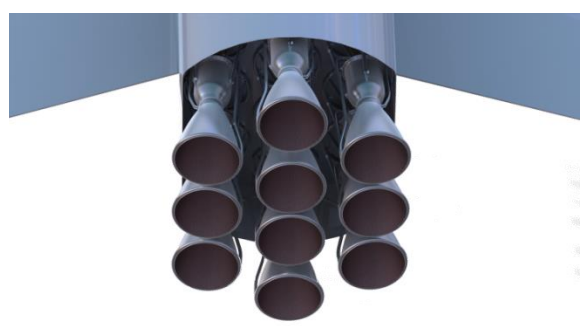

FIGURE 4: 1ST STAGE ENGINE ARRANGEMENT

VEHICLE WEIGHT

Using a modified version of the Rocket Equation including the concept of inert mass (dry weight of the vehicle, without payload), total mass of

the vehicle is estimated at 2700 kg (5960 lbs.), with inert mass fraction of 10.5% for the first stage and 13.5% for the second. Assuming a liftoff thrust of 170% of the rocket weight, to allow for potential engine failures at launch, required thrust is 45,000 N (10,116 lbs.-force). It is important to note that the inert mass fractions selected are very conservative estimates and would be less when the vehicle is actually constructed.

Maximum Acceleration

Due to design constraints, and to ensure reliability, the maximum allowable vehicle acceleration is limited to approximately 12 g's. Since the vehicle will not be human rated, there is no need to limit the acceleration further. Ideally, a greater acceleration is preferred as it limits the effect of gravity on the required delta-v. CubeSat specifications often indicate that the maximum acceleration during launch will be 12g's.

Objectives

- **Low cost**
- **High reliability**
- **Ease of manufacturability**
- **Advantageous use of 3D printing technologies**

3D Printing Opportunities

There are numerous ways in which utilizing 3D printing will be advantageous for the design of a rocket engine. Primarily, 3D printing will lower manufacturing costs for the engine. Complex architectures can easily be printed in one pass, eliminating the need for many conventional machining processes. The Armstrong-1 and Armstrong-1V take full advantage of these possibilities.

Armstrong-1 Rocket Engine

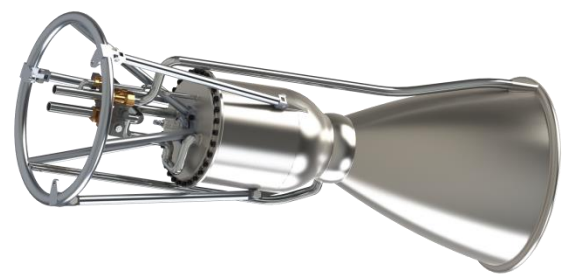

FIGURE 5: ARMSTRONG-1 1ST STAGE ENGINE

The Armstrong-1 engine and its vacuum partner the Armstrong-1V are designed to be the workhorse launch engines to accomplish the goals put forth by this competition. They are liquid-propellant engines designed to be as simple and reliable as possible. All calculations performed were confirmed with the Rocket Propulsion Analysis software written by Alexander Ponomarenko.

Size and Mass

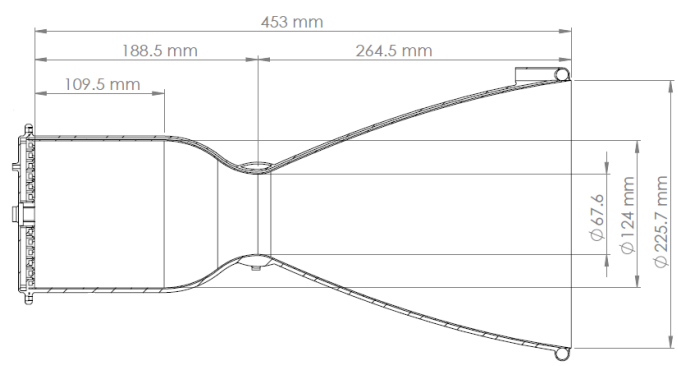

FIGURE 6: DIMENSIONS OF COMBUSTION CHAMBER (INCLUDING 1ST STAGE NOZZLE)

Material Considerations

The material outlined in the competition requirements is Shapeways 3D printable Stainless Steel. Although very versatile with its 3D printability, it also comes with some constraints that need to be dealt with.

Constraints

- **Low thermal conductivity** – With a thermal conductivity of (at most) 30 $\frac{W}{m*K}$, it will be very difficult to ensure the engine does not fail due to the high temperatures within the combustion chamber and nozzle throat.
- **High surface roughness** – Due to the nature of the 3D printing technique, the surface roughness of the material is quite high. This will cause a wide boundary layer and high turbulence of the coolant flow within the cooling channels.
- **High Mass** – Due to the relatively high density of the material, the engines are at risk of being quite heavy. Fortunately, with the small size of the Armstrong 1, this will not be a big issue.

Propellants

The decision was made early on to pursue a liquid fueled engine. Liquid engines generally have a higher specific impulse, and can easily generate more total impulse for a rocket launch. Additionally, they can be throttled and engine burn stopped and restarted as required, which can increase their efficiency and versatility. Finally, and most importantly, they are more suited to taking advantage of current technologies in the 3D printing industry, due to their small size and relative complex geometries.

Propellant Choice

The propellants we have decided to use are liquid oxygen (LO_2) as oxidizer and RP-1 (..CH_2..)as fuel. Keeping with the aim of low-cost solutions, these propellants are among the least expensive available. The engine uses a ratio of 2.3:1 for oxidizer to fuel.

The combination of liquid oxygen and RP-1 gives a relatively high specific impulse, while at the same time keeping propellant densities high, resulting in a smaller rocket, and thus lower inert mass. Additionally, exhaust gases are relatively harmless when compared to fuels which create ozone depleting gases such as fluorocarbons. Liquid oxygen's cryogenic nature will provide some challenges with storage and material contraction, yet the benefits far outweigh their associated costs.

Furthermore, the combination of RP-1 and liquid oxygen is less polluting than other conventional propellants in use today. Although carbon dioxide and other greenhouse gases will be by-products, the only way to eliminate these would be to use liquid hydrogen in place of the RP-1, which is unfeasible.

Hypergolic fuels such as Nitrogen Tetroxide and Unsymmetrical Dimethyl Hydrazine (UDMH) were considered due to the fact they are easily storable at room temperature. Hypergolic fuels also simplify engine design by eliminating the need for an ignition system. However, we ruled these fuels out due to their toxicity.

Propellant Feed System

Conventionally, there are two main methods of providing propellants to a rocket engine. Most commonly used for launch vehicles is a turbo-pump system, which is powered by a small gas generator or variation. The second is a pressure feed system using helium gas.

Ultimately, the decision to avoid the use of a turbo-pump was made. At such small engine sizes, turbo-pumps tend to lose a lot of efficiency. Additionally, high engineering costs and high manufacturing costs helped drive the decision to stay away from this type of system. Not only does the cost increase when a turbo-pump is used, but there is also an increased risk of failure due to the complexity of the system.

In the pursuit of simplicity, the decision was made to use a pressurized propellant feed system. Avoiding the use of a turbo-pump is a high priority, and if the combustion pressures are too high, this would be unavoidable. Accordingly, the chosen maximum chamber pressure, at 700 kPa (101.5 psi) allows the use of pressurized propellant tanks with a pressurized feed tank of helium. This requires a more robust propellant tank, thus slightly increasing the inert mass of the rocket. However, this is a simpler, more cost effective method than using a turbo-pump. The pressurized propellant feed cycle is shown below.

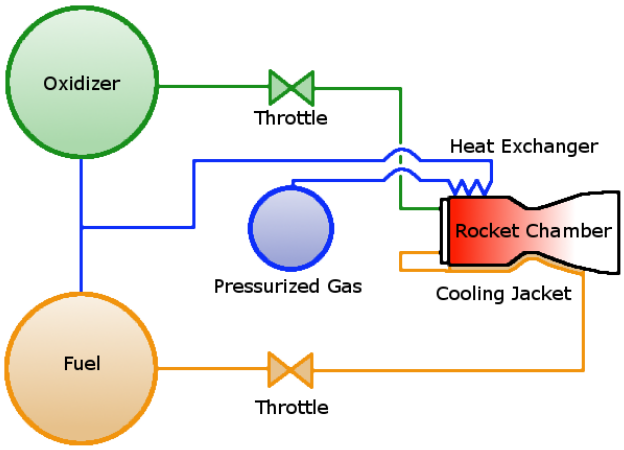

FIGURE 7: PRESSURE-FEED CYCLE

The pressurized gas is fed around the throat of the engine, serving two purposes. Primarily, the gas will expand as it pulls in heat from the engine throat, increasing its pressure, and in turn effectiveness. Additionally, feeding the gas around the throat helps cool the hottest part of the engine, though not substantially.

Engine cooling is performed regeneratively, with the RP-1 fuel used as the coolant. The fuel is fed into the end bottom of the engine, then through channels surrounding the chamber up to the injection manifold. Heat is transferred through the chamber walls into the RP-1, which in turn will offer a slight increase in engine performance. 3D printing allows the manufacture of the combustion chamber, including all of the cooling channels and associated plumbing in one simple process, regardless of the complexity of the structure.

Engine throttling is performed with throttles in each of the fuel and oxidizer lines. Additionally, there are priming lines with valves installed inline to ensure safe engine starts.

The required pressures in the propellant tanks are shown below. The final tank pressures are highlighted at the bottom.

Pressure required	kPa
Combustion Chamber Pressure	700
Injector Pressure Drop	140
Feed System Pressure Drop	50
Cooling Jacket Pressure Drop	105
Fuel Dynamic Pressure	40.5
Oxidizer Dynamic Pressure	57.1
Fuel Tank Pressure	**1035.5**
Oxidizer Tank Pressure	**1052.1**
Pressurant Tank Pressure	**7132.5**

TABLE 2: REQUIRED TANK PRESSURES

To ensure redundancy and reliability, the first stage will consist of 10 Armstrong 1 engines, each running at approximately 80% maximum thrust. Should an engine fail (resulting in a pressure drop) a pressure cut-off valve will automatically halt propellant flow to that engine. The mass flow will then increase to the remaining engines, and thus the vehicle will still produce the same amount of thrust and still have the ability to continue its objectives.

Each engine requires a maximum of 1.71 kg/s of mass flow through the system, which is low relative to other launch systems. This is due to the high efficiency and high Isp of the engines.

On the first stage there is enough redundancy to allow for two of the ten engines to fail at liftoff, and should more problems arise, more engine failures further into launch may not prevent the system from reaching its intended orbit.

Propellant Tank Design

Aluminum will be used for the liquid oxygen tank and composites will be used for the RP-1 fuel tank. Both of these methods have been used historically and have been proven to be reliable.

A cooling system will be in place within the aircraft, cycling the oxidizer through to ensure it remains cold.

Propellant Plumbing

Although the majority of the engine is being printed, for economical and mass reasons, the majority of the plumbing will not be. Printing the propellant feed lines would result in a much larger mass, and also be very expensive. Alternatively, it was decided that the feed lines would be made of stainless steel tubing, readily available in stores.

Tubing stems have been designed as part of the chamber, to be 3D printed as one unit. The stainless steel tubing would then be welded to these, ensuring a good, solid seal. As will be described below, the engines will not be gimballed, but rather be throttle-able to allow steering of the vehicle. This eliminates the need for any complex and expensive flexible joints in the propellant lines.

Combustion Chamber Design

Injector Manifold

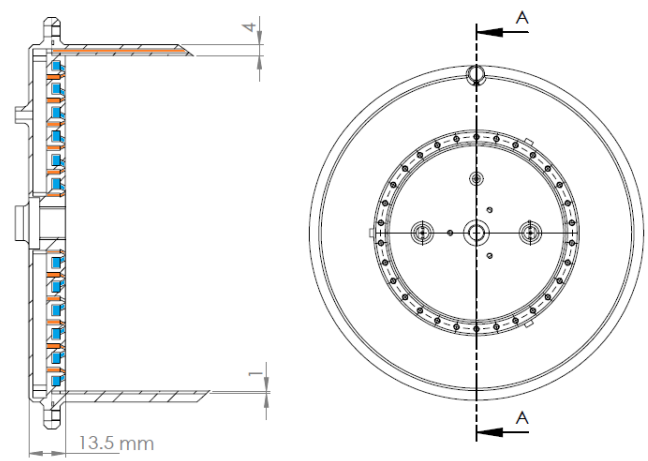

FIGURE 8: INJECTOR MANIFOLD. BLUE IS OXIDIZER, ORANGE IS FUEL

The injector manifold was designed to be as simple and reliable as possible. It is a 3D printed part, sealed with a gasket or O-ring. It is a separate component from the rest of the chamber, to allow for finish machining before installation into the chamber.

The injector consists of an alternating series of concentric rings of convergent nozzles injecting fuel and oxidizer. The nozzles are oriented in such a way as to ensure the fuel and oxidizer impinges upon one another, mixing thoroughly.

An igniter is mounted in the center of each engine's manifold. This location was chosen to allow for even ignition at a reliable point in the chamber.

Baffles are designed into the manifold, which help mitigate any acoustic vibrations within the chamber. Additionally, to prevent failures during engine ignition, priming lines and valves have been designed into the system.

Engine Cooling

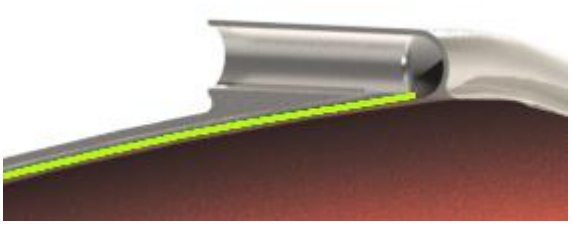

FIGURE 9: COOLING CHANNEL - HIGHLIGHTED IN GREEN

Ensuring proper cooling of the Armstrong-1 engine was one of the primary goals during development. Each engine produces at most 73.5 MW of heat power, of which approximately 5-10% enters the chamber walls.

The engine is cooled regeneratively, with the RP-1 fuel flowing through the chamber walls before being injecting into the engine. The stainless steel material provided by Shapeways unfortunately does not have a high enough thermal conductivity (approximately 30 $\frac{W}{m*K}$) for the heat to be dissipated into the cooling flow of the RP-1 without chamber failure. This issue is compounded by the fact that the minimum wall thickness (with surrounding support) is 1.5mm.

To solve this problem, it was ultimately decided an inner liner of copper would be required. Copper has a thermal conductivity of approximately 357$\frac{W}{m*K}$ at 727°C, ensuring the heat dissipation will be great enough to prevent chamber wall failures.

Thermodynamic and heat transfer analysis was performed to ensure failure would not occur. A conservatively high estimate was made where 10% of heat produced in the engine would be absorbed into the chamber walls. The maximum allowable heat transfer through the wall was calculated to be 214.2 $\frac{MW}{m^2}$, whereas the computed actual value was only 186.0 $\frac{MW}{m^2}$. This corresponded to a maximum wall temperature of 721°C through the nozzle throat (the hottest section of the engine.) This value is safely below the threshold of 800°C, as shown below.

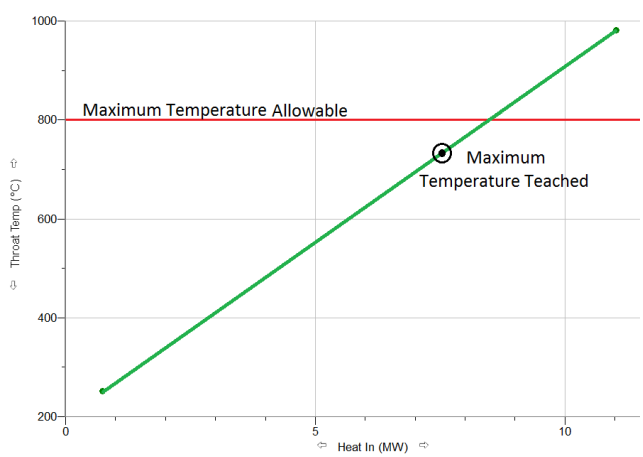

FIGURE 10: THROAT WALL TEMPERATURE VS. HEAT INTO WALL. DATA FOR SHAPEWAYS SS WAS OFF CHART

Liner thickness

The required thickness of the copper to prevent rupture at the specified chamber pressures was calculated. Given the ultimate tensile strength of the material (210 MPa) and a conservative safety factor of 3 (burst pressure of 2100 KPa) minimum thickness was calculated to be approximately .5 mm (20 thousandths of an inch.) Stress analysis was performed to ensure different expansion rates of copper and stainless would not cause a failure.

Nozzle Design

Although the Armstrong-1 and Armstrong-1V are essentially the same engine, the rocket nozzles are significantly different. The primary section up to approximately 10cm beyond the chamber throat, however the nozzles differ in shape and size beyond this point. This ensures an optimum Isp at each engine's operating altitude.

First stage nozzle:

The first stage nozzle is smaller in comparison to that for the second stage. It has an overall length of 264.5mm and diameter exit of 225.7mm with an expansion ratio of 10:1 (Its exit diameter is 10 times the diameter of the nozzle throat.)

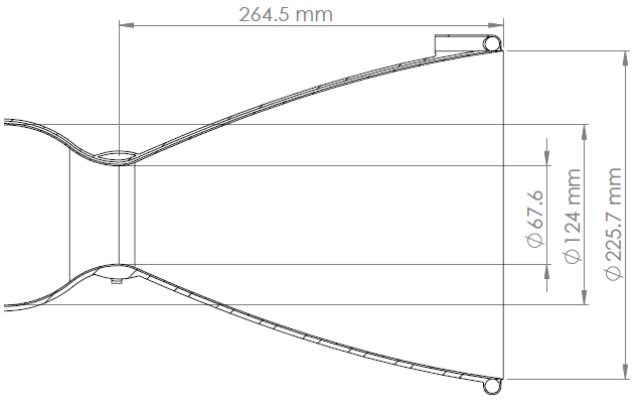

FIGURE 11: 1ST STAGE NOZZLE DIMENSIONS

Second stage nozzle:

The second stage nozzle is the larger of the two nozzles. It has an overall length of 509.5mm and diameter exit of 433.8mm with an expansion ratio of 40:1 (Its exit diameter is 40 times the diameter of the nozzle throat.) The greater expansion ratio makes optimal use of the lack of ambient temperature in vacuum, and increases the engine's Isp in this environment. Since the nozzle would be too large and too heavy to 3D print, a simple conical skirt made of aluminum is used. The slight loss in engine efficiency is mitigated by its increased simplicity, lowered cost, and ease of manufacturability. Full dimensions are given below.

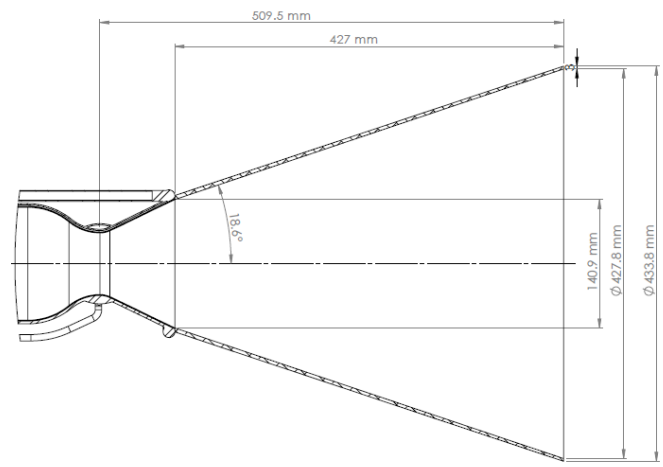

FIGURE 12: 2ND STAGE NOZZLE DIMENSIONS

Engine Manufacturability

Although the majority of the engines can be 3D printed, there are still a couple points which are beyond the capabilities of 3D printing.

Due to the low thermal conductivity of the stainless steel material that is being printed and the high heat flux inside the engine chamber and throat, a copper liner must be used in place of the stainless. Therefore, the engine, excluding the copper lining, will be printed as per the

design, then the copper lining will be added using an electroplating method afterwards.

3D printing makes it possible to make the complex structures of the injector manifold, the combustion chamber, and the thrust chamber. Three walls of the cooling channels, as well as all of the upper structure of the injector manifold will be 3D printed in stainless steel. Conductive wax will then be deposited in all of the channels and the copper will then be electroplated on to the exposed internal metal and wax using a copper sulphate solution. The wax will then be melted out and the internal channels will be cleaned with an acidic wax removal solution.

There are many other steps involved in getting the engine ready for launch after the main unit has been 3D printed. Primarily, the injection manifold requires drilling of the injection nozzles. Since the manifold is printed as a separate component, this will not be difficult and will not require much time.

Additionally, all propellant feed lines must be welded to the printed combustion chambers. All throttle valves will be mounted to the feed lines at this time. Further construction is related to the launch vehicle as a whole and will not be discussed for the purposes of this report.

Engine Specifications

General specifications for the Armstrong 1 and Armstrong 1V are given below.

Data	AS-1	AS-1V
Max. propellant flow rate (kg/s)	1.71	1.71
Specific Impulse (s)	268.4	318.7
Max. Thrust (N)	4505	5350
Mass (kg)	8.1	8.4
Chamber Pressure (kPa)	700	700

A detailed overview of the engine specifications is given in Appendix A.

Engine Subsystems

Engine Gimbal

All rocket vehicles require a method to be steered in order to reach the correct orbit. Larger conventional rocket typically use a gimbal to tilt the engines slightly when needed, producing a moment and thus steering the rocket.

Ultimately the decision was made to eliminate the need for an engine gimbal. They tend to be complex, heavy, and expensive to develop. Alternatively, we have devised separate steering systems for the first and second stages.

For the first stage, the rocket will make use of throttling to steer. Since there are 10 engines, and each is throttle-able independently, yaw and pitch motions are easily performed. Additionally, the outer engines are angled at 2° to allow roll motions.

The second stage uses a slightly different system. Since it has only one engine, throttling the engine will have no steering effect. Instead, small copper paddles just beyond the nozzle exit will swing into the exhaust stream, deflecting the flow slightly and thus steering the vehicle. The paddles are oriented in such a way as to allow roll, pitch, and yaw.

Other Subsystems

A rocket vehicle is a complex system consisting of many subsystems. These include engines and propellant systems, as well as guidance control,

communications, payload delivery, stability control, and other general control systems. Although most of these subsystems are not part of the 3D printed engine design contest, we are giving thought to their implementation.

The engine guidance and stability control systems will be taken care of with an onboard computer controlling the engines, which have gimbal mounts integrated into the combustion chamber structure.

The guidance and control of the rocket will be taken care of by an off the shelf autopilot system intended for small unmanned aircraft. Systems such as the *AirWare*, which is very adaptable to different platforms, have the ability to control and guide a rocket with some adaptation of their control loops as well as some upgrades of the hardware. The hardware upgrades would include high-speed, high-altitude GPS systems, and more robust sensors such as accelerometer, gyroscopes, thermal, and load sensors.

Payload delivery is simple and lightweight for small satellites, usually consisting of a spring loaded box that opens and projects the satellite out when the desired orbit is reached.

Other Considerations

During the preliminary planning stages, many design variations were considered. During the planning process, a ground launch was considered using a pressure-fed system. However, after performing the calculations regarding amount of pressurant needed, the numbers were unfeasible. Since it required higher combustion chamber pressures, and in turn higher propellant tank pressures, the mass of pressurant required was over 14,000 kg.

Additionally, we considered using an aerospike nozzle for the first stage engines, but deemed it too complex, and too difficult to cool effectively. To keep the system simple, we decided to stick with a more standard nozzle configuration.

A balloon launch was also considered, in place of the more conventional aircraft launch. However, due to the high expense of helium, unreliability of the balloons, and weather considerations, that system was deemed too risky.

Testing Program

A rigorous testing program will be implemented to ensure reliability and proper functionality of the Armstrong engines. The testing program will follow standard rocket engine design testing procedures.

First, the engine will be strenuously simulated and optimized in computer thermo-fluid analysis software. The engine will then be tested in increments of increasing burn duration on the ground to conditions past its maximum expected operating conditions. This ground testing will require a semi-vacuum testing environment for both engines, similar to those used for testing second stage vacuum engines.

The engines will then be attached to the first stage and a full static launch and flight simulation will occur with all engines burning for full launch burn duration. The second stage will follow a similar procedure with full second stage mock-up and burn tests.

Projected Costs

A business case has been prepared separately to this report. It details all of the projected costs of a launch, as well as possible funding opportunities.

Conclusion

The Armstrong-1 and Armstrong-1V engines were designed from the ground up to be inexpensive to build and operate. Making optimal use of 3D printing technologies was the primary objective during conceptualization and design. The only moving parts in the engines are the throttle and priming valves, ensuring a very simple and robust design.

Further analysis is required once a test engine has been constructed. However, most of the computation simulation has been performed, and the engine seems fit for further testing.

Stratodyne Aerospace feels that a solid platform for further development has been created. The cost for small satellite launches will drop significantly once the Armstrong-1 series engines are put into use.

References

[1] R. W. Humble, G. N. Henry and W. J. Larson, Space Propulsion Analysis and Design, McGraw Hill, 1995.

[2] G. P. Sutton and O. Biblarz, Rocket Propulsion Elements, John Wiley & Sons, 2011.

Appendix A: Engine Specifications

Parameter	Value
Fuel/Oxidizer	RP-1/LO_2
Fuel/Oxidizer Ratio	2.3
Flame Temperature (K)	3510
Molecular Mass of products $\left(\frac{kg}{kmol}\right)$	22.2
Isentropic Parameter at Throat	1.225
Combustion Efficiency (%)	0.93
Isp – 1st Stage (s)	268.37
Isp – 2nd Stage (s)	318.70
Chamber Pressure (kPa)	700
Mach Number within Chamber	0.2
Characteristic Velocity $\left(\frac{m}{s}\right)$	1641.80
Characteristic Length (m)	0.6
Chamber Contraction Ratio	3.01775
Nozzle Expansion Ratio, 1st Stage	10:1
Nozzle Expansion Ratio, 2ndStage	40:1
Cross-sectional Area of (m^2)	0.004813
Chamber Diameter (m)	0.07828
Chamber Length (m)	0.198824
Throat Area (m^2)	0.001595
Throat Diameter (m)	0.04506
Combustion Chamber Volume (m^3)	0.000957
Mass Flow – Launch altitude $\left(\frac{kg}{s}\right)$	1.71
Max. Thrust – Launch altitude (N)	4505.01
Thrust – Vacuum (N)	5349.63
Heat power produced (MW)	73.54
Max. heat into walls (MW)	8.46

Appendix B: Material Specifications

Shapeways Stainless Steel

Property	Value
Ultimate Tensile Strength (MPa)	842
Yield Tensile Strength (MPa)	455
Modulus of elasticity (GPa)	147
Percent elongation at break	2.3%
Thermal Conductivity $\left(\frac{W}{m*K}\right)$	20
Density $\left(\frac{kg}{m^3}\right)$	8100

Copper Liner

Property	Value
Ultimate Tensile Strength (MPa)	210
Yield Tensile Strength (MPa)	33.3
Modulus of elasticity (GPa)	110
Percent elongation at break	60%
Thermal Conductivity $\left(\frac{W}{m*K}\right)$	357
Density $\left(\frac{kg}{m^3}\right)$	8930

Appendix B: Engine Images