T&C
Power Conversion

T&C POWER CONVERSION

AG 1021

Low Frequency Linear
AMPLIFIER/GENERATOR

OPERATION MANUAL

110 Halstead Street
Rochester, New York 14610
USA
Tel: 585.482.5551
Fax: 585.482.8487
www.tcpowerconversion.com
sales@tcpowerconversion.com

- This page intentionally left blank -

www.tcpowerconversion.com
sales@tcpowerconversion.com

AG 1021

"LINEAR "
LF AMPLIFIER/GENERATOR

HIGH RF VOLTAGES MAY BE PRESENT AT THE OUTPUT OF THIS UNIT. All operating personnel should use extreme caution in handling these voltages and be thoroughly familiar with this manual.

DO NOT USE ANY CFC (CHLOROFLUOROCARBON) SOLVENT IN THE MAINTENANCE OF THIS PRODUCT. The no-clean flux used in manufacturing this product may leave a small inert residue, which will not affect the performance of the product. The use of CFC's for cleaning or maintenance may result in partial liquefaction of the no-clean flux residue, which will damage the unit and void the warranty.

This product is manufactured at T&C Power Conversion's Rochester, NY plant, following ISO 9001 Quality System principles.

Applicable EC Directives: **according to EC EMC Directive 2004/108/CE**
And according to EC Low Voltage Directive 2006/95/CE

Applicable Harmonized Standards:
UL IEC 61010-1, Edition 3.0 2010-6

NOTICE:
The material contained in this manual is subject to change without notice. No part of this manual may be reproduced or utilised in any form or by any means, electronic or mechanical, including photocopying or electronic transmission or other means of reproduction or distribution without prior written consent of T&C POWER CONVERSION, INC.
The drawings, specifications and other technical information contained in this manual are the property of T&C POWER CONVERSION, INC. and shall not be copied, reproduced or used in any way, in whole or in part, as basis of manufacture or sale of similar items without the prior written consent of T&C POWER CONVERSION, INC.

© 2004 T&C POWER CONVERSION, INC.

- This page intentionally left blank -

www.tcpowerconversion.com
sales@tcpowerconversion.com

WARRANTY

T&C POWER CONVERSION, INC. warrants to original Purchaser/User for a period of 12 months from the date of delivery, each instrument to be free from defects in materials and workmanship.

For a period of 12 months T&C will, at its opinion, adjust, repair, or replace defective parts without charge to the original purchaser, so that the instrument performs according to its specification.
When warranty service is required, the instrument must be returned, transportation prepaid, to the factory.

If, in our opinion, the instrument has been damaged by accident, unreasonable use– inconsistent with user's manual, improper site preparation or maintenance, or abnormal condition of operation – repairs will be billed at the standard rate to Purchaser.
In these cases, an estimate will be submitted to User before the work is started.

SERVICE AND TECHNICAL ASSISTANCE

For Service or Repair, contact T&C directly or a local representative with the following information:

- Model and serial number.
- Purchase order number.
- Detailed description of malfunction.

For technical Assistance for your particular application contact the factory. The following information will help us provide you with prompt and efficient service:

- All information displayed on the LCD.
- Detailed description (e.g. physical damage and/or performance anomalies, quantitative and/or qualitative deviation from specification), including miscellaneous symptoms, dates and times.
- The environment and circumstances under which the issue developed.

Supporting test data and/or records that are available.

Sales & Service Locations

Look for our currently updated Sales and Service Representatives around the world on our website:
http://www.tcpowerconversion.com/about/representatives.html

- This page intentionally left blank -

www.tcpowerconversion.com
sales@tcpowerconversion.com

PRODUCT MANUAL REVISION CONTROL FORM

Document Title: AG 1021 Operation Manual Revision History Control Page

Document Number: 9081 0015

Document Status: Open

Revision History

ECO	Rev	Description	Effective Date
	A	First production release	8/2004
	B	Format update (MS Publisher)	8/20/04
	C	Format update to meet EN61010-1 requirements	11/24/04
DPL	D	Updated input current,	11/28/07
	E	Updated to new smaller chassis	11/20/08
	F	Software Instructions Revision	04/07/2009

	Name / Title	Signature	Date
Written By	Joe Reminder	*Joe Reminder*	04/07/2009
Checked By	Alex D. Sulik	*Alex D. Sulik*	04/07/2009
Approved By	Tomasz J. Mokrzan/general manager	*Tomasz J. Mokrzan*	04/07/2009

- This page intentionally left blank -

www.tcpowerconversion.com
sales@tcpowerconversion.com

TABLE OF CONTENTS

Warranty 5

Service and Technical Assistance 5

Product Manual Revision Control Form 7

Introduction 11

Chapter 1: Safety 13
1.1 Labels 13
1.1.1 Important operating or maintenance cautions 13
1.1.2 Shock Hazard Warning 13
1.1.3 Caution Warning 13
1.1.4 AC INPUT and Chassis Terminal 14
1.1.5 External RF IN 14
1.1.6 RF OUT 14
1.1.7 EDITOR 14
1.1.8 Miscellaneous Symbols 15
1.1.9 Service 15
1.1.10 Name Plate 16

Chapter 2: System Installation 17
2.1 Initial Installation 17
2.1.1 Mechanical Inspection
2.1.2 Claim for Damage
2.1.3 Packaging for Reshipment
2.2 Installation Requirements 18
2.3 Cooling and Ventilation 18
2.4 Power Line Voltage 18
2.5. System Interconnection 19
2.6 Initial Turn-On Procedure 19

Chapter 3: Operation 20
3.1 Front Panel Control and Display 20
3.2 Rear Panel 22
3.3 Remote Control 23
25-pin Interface Schematic Diagram 24
3.4 Rear Panel Connector Analog 25
3.4.1 Rear Panel Sub D9 RS-232 I/O Connector Signal Description Table 25

Page

3.5 Graphic User Interface, GUI Operation 26
3.5.1 GUI Program for RS-232 Interface 27
3.5.2 Working GUI and active unit 28
3.6 Indicators 29
3.6.1 Controls 29
3.6.2 Options 30

3.7 RS-232 Communication Protocol RS Port v.1.61 32
3.7.1 Introduction 32
3.7.2 General Frame Format 32
3.7.3 CRC Format 32

3.8 COMMAND SUMMARY Table 33
3.8.1 Initialization 33
3.8.2 Measure 33
3.8.3 Setting 34

4.0 Standard Working Process 34

5.0 Initialization: 35
5.1 Host asks about operating limits 35
5.2 Host asks about present level for AGC Mode: 35
5.3 Host asks about present level for MGC Mode: 35
5.4 Host asks about current Frequency settings: 36
5.5 Host asks about current sweep parameters: 36
5.6 Host asks about current Burst parameters: 37
5.7 Host asks about current setting of SoftKey: 37
5.8 Host asks about current controller state: 38
5.9 Host asks about current software and hardware version: 39
6.0 Measure: 39
6.1 Host asks about current measured values: 39 to 40
7.0 SETTINGS: 40
7.1 Host sets power level for AGC Mode: 40
7.2 Host sets power level for MGC Mode: 40
7.3 Host sets internal frequency: 41
7.4 Sets parameters for Sweep Mode: 41
7.5 Host sets parameters for Internal Burst Mode: 42
7.6 Host turns on External Burst Mode: 43
7.7 RF power ON / OFF procedure (using SetSKEY): 43 to 45
8.0 SIMPLIED ALGORITHM FOR HOST: 45
Appendix: 47
AG 1021 Specifications 48
Technical Diagrams
AG Function Block Diagram 49
Mounting and Outline Diagram 50
AG 1021 Declaration Of Conformity 51

www.tcpowerconversion.com
sales@tcpowerconversion.com

INTRODUCTION

The T&C Power Conversion, Inc. Model AG 1021 Amplifier Generator is a totally solid state, air cooled RF power source expressly designed for use in general ultrasonic and gas plasma applications. The amplifier/generator utilizes conservatively rated solid state components and automatic power control circuitry to ensure reliable and continuous performance. Completely self-contained, the AG 1021 provides all of the control and monitoring functions needed in a state-of-the-art power amplifier/generator, which will provide up to 100 W linear continues output (up to 300 W in pulsing) into a 50 Ohm load.

The AG 1021 measures forward power, reflected power, and the current draw of its power amplifier module. Should any of these parameters exceed a preset limit, the power control circuit will immediately limit the amplifier/generator's RF power output so that the components always remain within safe operating limits.

The AG 1021 is equipped with two types of remote control interface. The standard T&C Power Conversion, Inc. Analog Interface (see pages 24-25) allows control and monitoring of the amplifier/generator through the use of analog voltage control signals. The RS-232 Digital Interface (see page 25) allows control and monitoring of the amplifier/generator through the use of PC Windows operated GUI Software, or custom RS-232 set of commands (see page 32). Both Digital and Analog Interfaces provide full control of the unit and allow for automated operation through the use of computers on these ports.

The AG 1021 can accommodate a wide range of AC line voltages automatically. The unit also has an EMI filtered AC power entry to eliminate conducted line leakage.

Only minimum maintenance is required to guarantee successful operation and endurance of your AG 1021 amplifier/generator. The unit's completely solid state design substantially reduces DC voltages which eliminates the hazards associated with servicing high-voltage vacuum tube equipment.

The AG 1021 is classified as ISM (Industrial/Scientific/Medical) type of an equipment.

This manual is divided into three chapters and an appendix. Please refer to the following descriptions to help you locate the information you need.

Chapter	
1	Deals with precautionary details. Please read this if you are unfamiliar with the AG 1021 or T&C Power Conversion's warranty procedures
2	Explains how to install and power up the system for the first time
3	Describes the operating details of the AG 1021
Appendix	Technical Specifications

www.tcpowerconversion.com
sales@tcpowerconversion.com

Safety

Chapter 1

1.1 Labels

Labels are provided to alert operating and service personnel to conditions that may cause personal injury or damage to the equipment from misuse or abuse. Please read the labels and understand their meaning.

1.1.1 Important Operating or Maintenance Caution

Definition: Attention, consult accompanying document

The exclamation point within a triangle is to alert the user, operator or service personnel to the presence of important operating and/or maintenance instructions in the User's Manual.

1.1.2 Shock Hazard Warning

Definition: Caution, risk of electric shock

The lighting bolt within a triangle is to alert the user, operator or service personnel to the presence of unprotected voltage points within the enclosure of sufficient magnitude to cause dangerous electric shock.

Only authorized service personnel with the schematic diagram and knowledge of the voltages within the equipment shall remove covers or panels bearing this symbol.

1.1.3 CAUTION WARNING

Do not operate this amplifier with the cover removed. Lethal voltages are present beneath the cover. The cover protects against **electrical shock** due to AC line voltage, high RF potential in the hundreds of Volts at the output transformer, coupler and output connections. Also the DC supplies produce high voltages in the conversion process and are capable of producing more than 25 Amps of current at nominal output voltage. The cover is an integral part of the air ducting system that keeps components cool. Without the cover in place, insufficient air flows between and around the two DC power supplies causing overheating of the internal components.

This label should remain affixed to the cover just over the RF output connector. Always connect the load to the RF output connector before connecting the RF input to the amplifier. This will ensure that high voltage at the center pin of the output BNC connector will not be exposed. Take care not to interchange the input and output cables.

Chassis Terminal

Be sure the chassis is grounded to a reliable earth ground using the grounding stud provided on the rear panel. In addition, be sure the grounding wire remains connected securely between the cover of the chassis and the base of the chassis.

1.1.4 AC INPUT – Alternating current input

Definition: AC Input ratings for operation
100 - 120 V ac, 50 - 60 Hz, 10 A
or
200 - 240 V ac, 50 - 60 Hz, 5 A

Chassis Terminal — For connection of AG 1021 to a proper safety ground.

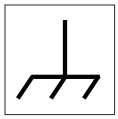

1.1.5 External RF IN

Definition: RF Input

The External RF IN symbol is to identify the signal input port for the user, operator or service personnel.

1.1.6 RF OUT

Definition: RF Output

The RF Out symbol is to identify the signal output port for the user, operator or service personnel.

CAUTION!
RF Output voltage up to 340 V p-p,
From 0.02 to 12 MHz may be present
At this amplifier output!
Take precaution. Do NOT touch connector
When operating!

1.1.7 EDITOR – Frequency or power adjustment in EDIT function.

When POWER: gain adjustment IN MGC Mode, Output Level Adjust in AGC Mode.

When FREQUENCY: frequency setting of INTernal signal source. 1kHz resolution.

Definition: gain value or output power level knob for:

Power Entries: when EDIT selector in POWER position

Frequency Entries: when EDIT selector in FREQ position.

www.tcpowerconversion.com
sales@tcpowerconversion.com

1.1.8 Miscellaneous Symbols

AC Power Toggle Switch

O

AC Power Off Symbol

Figure 3

Definition: AC Off (power: disconnection from the AC mains)

The Off symbol on the AC Power Switch is to identify the functional configuration of the toggle switch (when the switch handle is pointing towards “AC OFF”) for the user, operator or service personnel.

I

AC Power On Symbol
Figure 4

Definition: AC On (power: connection to the AC mains)

The On symbol, next to the AC Power Switch is to identify the functional configuration of the toggle switch (when the switch handle is pointing towards “AC ON”) for the user, operator or service personnel.

1.1.9 Service

T&C POWER CONVERSION, INC. is responsible for safety and performance of the equipment only if:

- Assembly operations, extensions, readjustments, modifications, or repairs are carried out by authorised personnel.
- The electrical installation is made in accordance with User’s Manual and the room in which the equipment is installed complies with the environmental requirements,
- The equipment is used strictly in accordance with the instructions in this manual or associated test documents.

1.1.10 Name plate

The AG 1021 can be identified by a name plate on its rear side panel that contains the following information.

Figure 5 Name plate

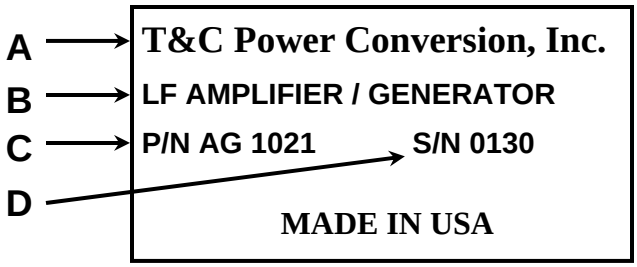

A. MANUFACTURER

T&C POWER CONVERSION, INC

110 Halstead Street, Suite #7

Rochester, NY 14610

USA

B. TYPE OF EQUIPMENT

This line holds the description of what the equipment is intended to be used for.

C. MODEL NUMBER

The assembly number which uniquely identifies product configuration is entered on this line.

D. S/N

This line contains a number which is sequentially assigned as the product is manufactured.

www.tcpowerconversion.com
sales@tcpowerconversion.com

Chapter 2

System Installation

Note: Chapter 2 is for "Authorized Personnel" only, qualified in electrical installation

2.1 Initial Installation

2.1.1 Mechanical Inspection

If damage to the shipping carton is evident, request the carrier's agent be present when the unit is unpacked. Check for equipment damage and inspect the cabinet and panels for dents and scratches.

2.1.2 Claim for Damage

Please notify T&C Power Conversion, Inc. directly or your authorized T&C representative if the product is mechanically damaged or fails to meet specifications upon receipt. Retain the shipping carton and packing material for the carrier's inspection as well as for subsequent use to return the unit should this become necessary.

2.1.3 Packaging for Reshipment

Contact Your T&C sales and support office to coordinate the return of the unit. Whenever possible, the original shipping carton and packing material should be used for reshipment. If the original packing material is not available, package the item in a suitable substitute that meets industry standards of safe packaging standards. Use a strong shipping container. If a cardboard carton is used, it should be at least 200 lbs. tested material.

Use shock-absorbing material around all sides of the instrument to provide a firm cushion and to prevent movement inside the container wall on each side. Protect the front panel by means of cardboard spacers inserted between the front panel and the shipping carton. Make sure that the instrument cannot move in the container during shipping. Seal the carton with a acceptable industry grade of shipping tape and mark the container:

FRAGILE DELICATE INSTRUMENTS

2.2 Installation Requirements

The AG 1021 is designed for bench or system operation. To guarantee the best performance, make sure there is adequate clearance for the entrance of cooling air to the front of the unit as well as for the exhaust out the back of the unit. (6"min.)

The AG 1021 is set for operation with a single phase, 50 – 60 Hz AC Line of 100 to 120 VAC or from 200 to 240VAC. The power supply switches automatically to the line voltage applied to the unit. Unit does not require any special internal adjustments if operated within the specified voltage range.

Please check the following items before applying AC power to the AG 1021:

- *Check Unit for any physical damage that could affect safety.*
- *Ensure the AC power cord is an IEC type with a 10 Amp or greater rating with a proper safety ground connection.*
- *The unit should be connected to an AC outlet that is easily accessible.*
- *Ensure the AC power cord is plugged into a properly grounded outlet..*
- *Connect AG 1021 chassis to a proper safety ground. (Use Grounding Stud on rear panel) A green insulated 18-gauge wire or heavier less than 50 feet in length is recommended.*

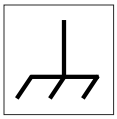

2.3 Cooling and Ventilation

The AG 1021 is protected against damage caused by lack of air flow. If inadequate air flow causes the temperature to rise over the OVERHEAT threshold, the amplifier/generator senses and OVERHEAT fault, and RF power is automatically shut off. RF power will be restored automatically after the temperature falls below threshold.

For proper ventilation, adequate clearance of at least 6 inches (~150 mm) should be provided for the cool air intake on the front panel of the amplifier/generator. The ports located on the rear panel of the unit, should have at least 6 inches (~150 mm) of clearance and also be free from obstruction. To reduce potential overheating, do not allow exhausted warm air from the back to re-circulate to the front of the unit.

Maximum Ambient Temperature: 40 ˚C

2.4 Power Line Voltage

The AG 1021 is designed for operation from a single-phase, 3-wire with electrical network the following parameters:

100 - 120 V ac, 50 - 60 Hz
or
200 - 240 V ac, 50 - 60 Hz

www.tcpowerconversion.com
sales@tcpowerconversion.com

2.5 System Interconnection

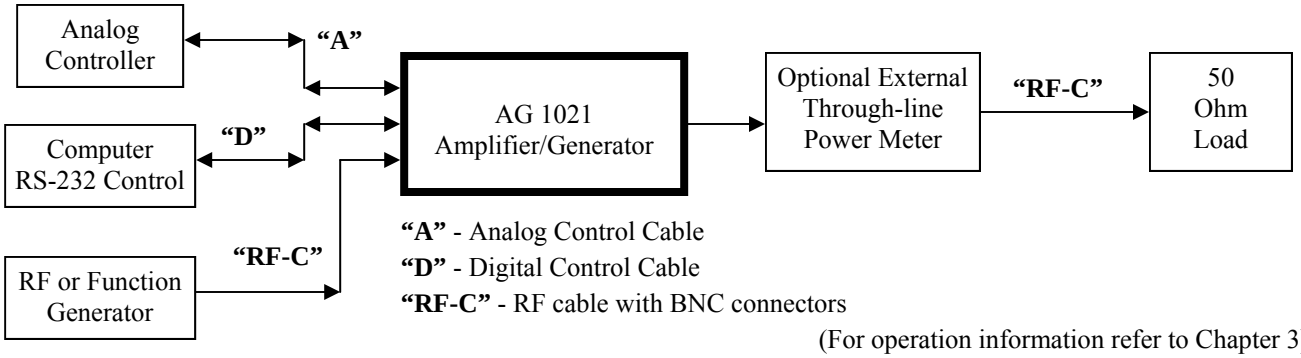

"A" - Analog Control Cable
"D" - Digital Control Cable
"RF-C" - RF cable with BNC connectors

(For operation information refer to Chapter 3)

2.6 Initial Turn-On Procedure

The following procedure outlines a simple test to check for proper operation of the AG 1021 amplifier/generator. It is assumed that the amplifier/generator is already connected to an appropriate AC power source, and a suitable 50 ohm dummy load (as indicated in the diagram above).

Turn ON the main AC switch from the front panel.

1. The screen should flash the name of the manufacturer, serial number, and software version before displaying the PMi (Power Mode Internal) function.

2. Check all the LED switches. Each switch contains two functions, when activated (marked ☼) the appropriate switch should light up.

Screen Displays:

Switch	function	screen
RF Output	☼ON	PMi=0.0%G FP=0W LP= 0W RP=0W
	OFF	PMi= 0.0%G RF OFF
Edit	☼Freq	F= 1.000MHz RF OFF
	Power	PMi= 0.0%G RF OFF
Mode	☼AGC	PAi= 0W RF OFF
	MGC	PMi= 0.0%G RF OFF
Source	☼EXT	PMe= 0.0%G RF OFF *
	INT	PMi= 0.0%G RF OFF *

*** in MGC Mode**

3. **Run a test.** Activate the RF Output ☼ON function and increase the PMi percentage to 50%. The FP reading should be approximately 40W. Next increase the PMi to 100%. The FP reading should now read approximately 260W.

4. Set the PMi back to 0%. With the RF Output ☼ON function still activated, press the Mode LED switch for the AGC function. Verify that the PAi, FP, and LP reading are the same. Increase PAi to 300W. Make sure that the FP and LP read 300W and are flashing. This indicates the maximum limit. Reduce PAi to 290W, and flashing should stop.

5. Decrease PAi to zero. Disconnect RF output, and increase the PAi to 75W. FP should equal 75W. LP and RP should be flashing. LP will equal 0W (readings of up to 2W possible) and RP will equal 75W. When reducing below 75W, the flashing should stop.

6. Reduce PAi to zero, and reconnect load.

7. This concludes the test. The unit is operating properly and ready for use.

Chapter 3

Operation

The *AG 1021* is a bench top mounted laboratory amplifier/generator with expressive front panel features. On the left end of the front panel is the **AC line** power ON / OFF switch. This heavy-duty double pole switch connects and disconnects the hot and neutral power line connections. The amplifier is shipped from the factory internally wired for 100 - 120 VAC and 200 - 240 VAC. The power supply switches automatically to the line voltage applied to the unit.

The lit up LCD display shows that AC power is connected to the unit, the power switch is on and the DC power is available to the amplifier. The amplifier has Type "**BNC**" RF coaxial connectors on the rear panel for easy connection of the signal source and load. The user must assure that connecting cable to the output is of the 50-Ohm type. Cables of other types may introduce a mismatch that will reflect power back into the AG 1021.

Forward RF power is continuously measured and indicated on the forward power (FP), the upper right quadrant of the display. Reverse reflected power (RP) is similarly displayed on the lower right quadrant of the display. In normal operation, the forward power is at maximum gain in relation to the drive signal applied to the input, while the reverse power is a relatively small portion of the forward power. Few loads are a perfect 50 Ohms, so some reflected power is typical. The opposite extreme, a faulty load (either open or shorted), results in significant reflected power typically near the level of the forward power. The continuous and highly visible real time, simultaneous display of forward, reflected, and load power (LP) is of great benefit in monitoring a RF power delivery system, that this product offers.

The air intake must be kept clear of obstructions. A wide area of ventilating holes serve as the air intake for ventilating the amplifier. Linear class "A" operation has low distortion benefits and necessitates removal of the heat generated by this bias mode. *The air intake must be kept clear of obstructions,* as should the fan outflow at the rear of the unit. Allow a minimum of 6" clearance around all sides of the chassis. The fan's speed is proportional to the temperature rise of the internal heat sink. There is also a high temperature cut out switch that shuts down the amplifier if the heatsink gets too hot. This could happen; for example, if the intake airflow is obstructed. RF power will be restored automatically after the temperature falls below threshold.

3.1 Front Panel Controls and Display:

There are four amber buttons, beneath the display, that illuminate when selected. These are used in conjunction with the "**EDITOR**" knob and the display to provide manual control. Four buttons are labeled **RF**, **Edit, Mode,** and **Source**. We will discuss each button's purpose and operation, from left to right. The buttons will retain their default settings: RF–Off, Edit – Power adjusts with EDITOR knob, Mode – MGC, Source – INT (internal at 1MHz).

www.tcpowerconversion.com
sales@tcpowerconversion.com

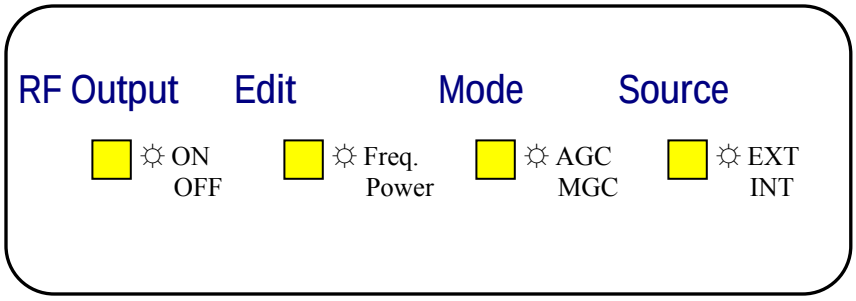

RF Output: RF Output will default to off each time unit is turned on. RF Output button will not illuminate and the display will show in the upper right quadrant as RF OFF.

☼Pressing the switch will cause it to illuminate and RF output will be active depending on the settings of Edit, Mode, and Source. The RF Output switch must be pushed to illuminate the switch and allow the unit to operate.

WHEN PULSING IN BURST MODE, the unit will not switch to AGC. In addition, when using AGC mode the unit will not allow you to switch to Burst mode.

Edit: Edit will default to power setting when AC is turned on. The edit button will not illuminate, and the display will indicate the power settings accepted by the EDITOR knob. The display will show in the upper left quadrant as PAi = XXX W or PMi = 0.0%G

☼When illuminated, the display will indicate the frequency settings accepted by the EDITOR knob. In Edit Power the display will show F = X.XXX MHz when Editing Frequency.

Mode: Mode will retain the last setting used before the unit was switched off.

☼**AGC** (when illuminated) - Automatic Gain Control. Power output controlled by EDITOR knob and pin 5 of the remote Analog DB25 Connector (scale 1 VDC = 100 Watts) or by settings from personal computer control window of Graphic User Interface (GUI) via RS 232 communication connector.

MGC (when not illuminated) - Manual Gain Control. The EDITOR knob will control the output power. In MGC, internal fixed gain control may be set from close to 0 W (0.0%G) to full gain of 55 dBm (100.0%G) by the EDITOR knob. MGC "%G" scale is not linear. Read Forward Power level for desired value when adjusting the EDITOR knob.

Source: Source will retain the last setting used before the unit was switched off.

☼External signal source when illuminated. Requires a signal input to the RF input connector on the back panel. The signal will be amplified as noted in the specification.

Internal signal source when not illuminated. This will cause the unit to be operated as a RF Generator. The EDITOR knob will adjust the digit that is selected.

EDITOR knob:

- When in MGC (Edit – Power) is selected, EDITOR is used to select the power by varying internal fixed gain setting.
- When in AGC (Edit – Power) is selected, EDITOR is used to select the power by varying internal gain setting to accomplish desired constant output power. By depressing the knob quickly, it toggles the adjustment option from units to tens of Watts.
- When the internal signal source is selected (Source: INT, Edit – Freq.), this adjustment is used to select the frequency. By depressing the knob, a cursor will toggle through the selection of units, from 1kilohertz to 100's of kilohertz on the frequency display. The knob is then rotated to select the digit preferred for that position.

3.2 Rear Panel:

The female 25 pin D-style connector is for remote monitoring and control. A label describes the pin functions assigned to the connector. Additional details are provided on page 24 and 25.

NOTE: When this method of control is used, it has priority over all other methods.

The female 9 pin D-style connector is for the RS-232 interface. Complete information is in the related tables on pages 25 and 32 to 45.

NOTE: When RS-232 control is in effect, it shares control and information with the front panel adjustments and displays.

Blanking:

A TTL High level on center pin will interrupt the RF Output. The normal open condition allows normal operation. Pulsing can be accomplished by maintaining a positive TTL level on center pin and pulsing it to ground and back to positive. The RF Output will then pulse in relationship to that DC pulse. Please contact the factory for special applications and uses. (The same as pin 14 of Analog Port.)

Burst and Sweeping:

AG 1021 offers three modes of operation: External Burst, Internal Burst, and Sweep. For more information about the graphic user interface GUI, see page's 26-31 of this manual.

External Burst mode can be activated one of two ways. Either by applying 5Vdc to pin 16 of the DB-25 connector, or by using the RS232 communication port with GUI (RS232 Port V.1.61 Protocol) and selecting External Burst Mode under options/ Burst & Sweep. With External Burst Mode active, a TTL signal with a specific pulse time and width, can be applied to pin 15 of the DB-25 connector. When using this mode, remember that if the Burst mode is requested using the GUI, It will default to off when unit is switched off. However, if 5Vdc is applied to pin 16, the burst mode will be active when unit is switched on/ off until the voltage is removed from pin 16.

Internal Burst Parameters and Sweep Parameters can be activated only by using the GUI. The option is located under Options/ Burst & Sweep. More information located can be found on page 31.

Interlocking features for RS-232 requires, that the AG unit and computer interface are connected and remain connected, or RF ON power will be interrupted.

NOTE: this feature is optional - please request controller software with active RS232 Watchdog.

www.tcpowerconversion.com
sales@tcpowerconversion.com

3.3 Remote Control:

Description: These additional features are provided by use of the Remote Control:

- *Power Leveling within + / - 0.5 dB. From 20 kHz to 14 MHz min.*
- *Remote power level adjustment and control.*
- *Remote access to forward and reverse power level information.*
- *Status flags indicating power on, thermal limit, reverse power limit.*

Operation: To enable remote operation, the remote control signal must be asserted (+5 Volts) at pin 8 of the rear panel connector. To remotely control the amplifier's power level, pin 5 must be provided with a DC voltage proportional to the RF power level desired. Refer to the table of panel connector pin descriptions on page 25 of this manual.

Under remote control, the final output power level is still partly dependent upon the drive level provided to the front panel input connector. This is necessary due to the finite power gain of the amplifier. In most applications it is desirable to start with a drive level in local control that produces half the maximum power that may be desired under remote control. This ensures that there is sufficient drive at the amplifiers input for remote control to attain the full range of remotely set power. For example, to be able to vary the output power level from zero to 50 Watts remotely, the drive level could be started from – 8 dBm. This is demonstrated as follows: A power of 100 Watts is 50 dBm. Half of that power is 47 dBm (50 Watts), subtracting the amplifier's gain (55 dB) yields an input power level of – 8 dBm.

The preceding discussion provides a good starting point though any output power level can be reached with different combinations of input drive level and remote power control voltage. In applications where minimum signal distortion is of special importance, the combination may be altered. This is particularly useful in fixed frequency applications. Optimal levels for frequency swept use are best judged empirically.

The rear panel connector's socket pins are numbered 1 to 13 reading from right to left across the top row. Returning to the right, the bottom row is 14 to 25.

A simple test circuit for remote power adjustment uses a multiturn 10 K potentiometer wired as follows: CCW terminal to pin 12 (AGND), CW terminal to (+5 Volts) and pin 8 (EXT. CONT. SEL.), and the wiper of the pot connected to pin 5 (RF control input).

Blanking and Pulsing: The connector also has a blanking input on Pin 14. A TTL High level on Pin 14 in relation to Pin 18, 19, 21 (Analog Ground) will interrupt the RF Output. The normal open condition allows normal operation. Pulsing can be accomplished by maintaining a positive TTL level on Pin 14 and pulsing it to ground and back to positive. The RF Output will then pulse in relationship to that DC pulse. Please contact the factory for special applications and uses.
NOTE: Pin 14 must never go negative in relation to Pin 18, 19, 21.

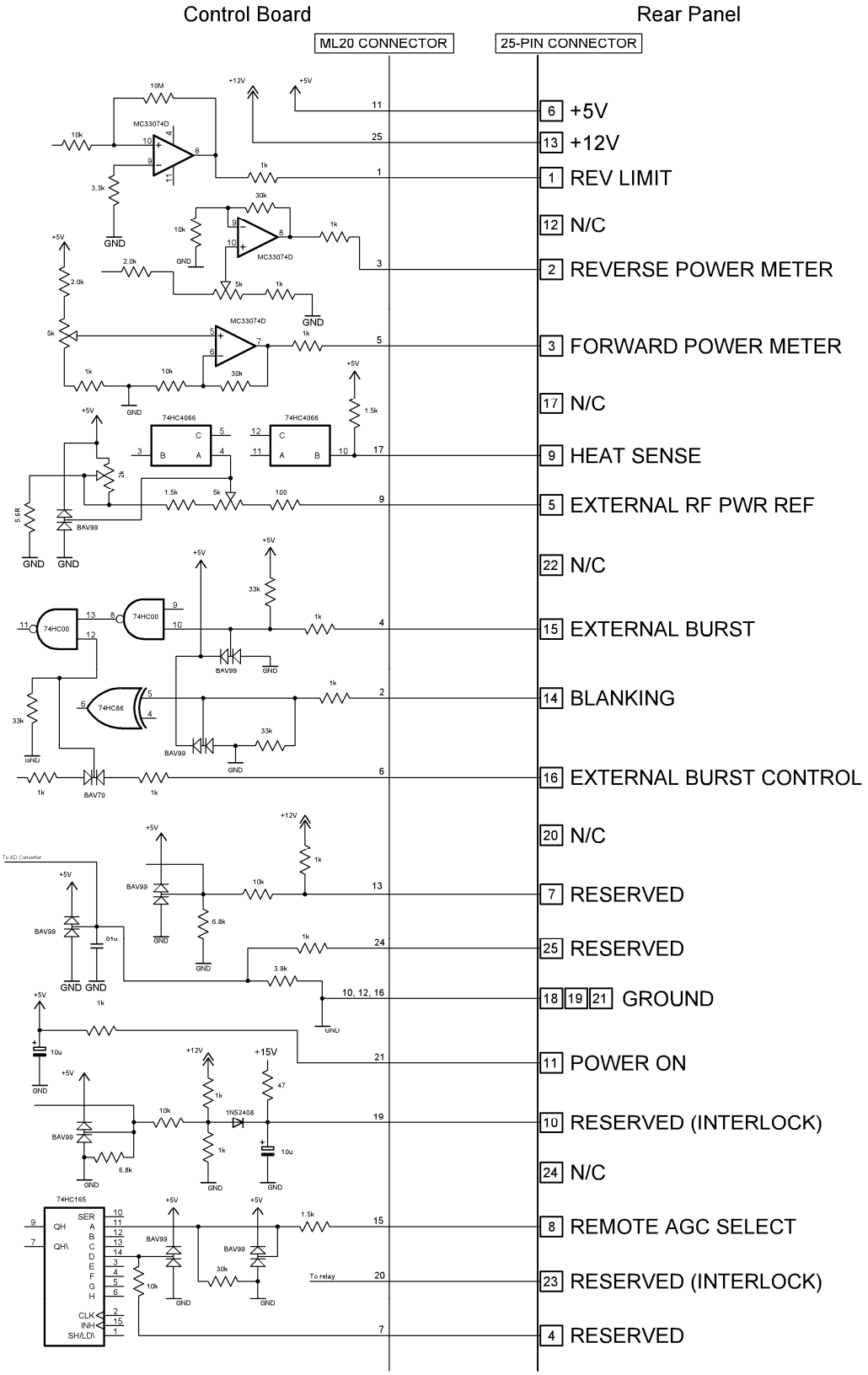

25-pin Analog Remote Interface Schematic

www.tcpowerconversion.com
sales@tcpowerconversion.com

3.4 Rear Panel Connector, Analog DB-25 Option:

Pin #	Name of Signal	Signal Description
1	REV LIMIT - This output indicates that output power level was automatically reduced under load mismatch conditions.	TTL Compatible; Hi = RF Out Limit, Lo = Normal operating condition at low VSWR. Signal Direction: **OUT**
2	REVERSE POWER	Linear voltage output, 1 Vdc = 100W scale Signal Direction: **OUT**
3	FORWARD POWER	Linear voltage output, 1 Vdc = 100W scale Signal Direction: **OUT**
5	EXTERNAL RF PWR REF - optional part of AGC	Linear voltage input, 1 Vdc = 100W scale Signal Direction: **IN**
18, 19, 21	ANALOG GROUND	Signal Common
8	REMOTE AGC SELECT	TTL Compatible; Hi = remote control active, Lo = remote control disabled, Signal Direction: **IN**
9	HEAT SENSE - This output indicates that the unit has become too hot.	TTL Compatible; Hi = FAULT/Amp disable, Lo = amplifier enabled Signal Direction: **OUT**
10, 23	INTERLOCK - optional on special request.	CONNECTED: amplifier enabled OPEN: amplifier disabled Signal Direction: **IN**
11	POWER ON: DC power applied to control circuit; indirect meaning AC is ON.	TTL Compatible; HI = Power ON, Lo = Power OFF Signal Direction: **OUT**
14	BLANKING SIGNAL	TTL Compatible; HI = interrupts RF at output connector, Lo = uninterrupted operation. Signal Direction: **IN**
15	EXTERNAL BURST - Defines Pulse Time and Width input.	TTL compatible input: HI - BURST RF OUTPUT LOW - BURST RF OFF
16	EXTERNAL BURST CONTROL	TTL compatible input: HI - RF EXTERNAL BURST READY LOW - NO SIGNAL OR BURST OFF
18, 19, 21	ANALOG GROUND (BLANKING AND BURST RETURN)	Return for pin 14, 15 and 16

3.4.1 Rear Panel SubD9 RS232 I/O Connector Signal Description Table

Pin #	Name of Signal	Signal Description
2	RxD Data from Controller to PC	RS 232 signals Signal Direction: **OUT**
3	TxD Data from PC to Controller	RS 232 signals Signal Direction: **IN**
5	GND	Signal Common GND Signal Direction: **IN/OUT**
1, 6, 7	Quasi HANDSHAKING for PC	Pins shorted on Controller side Signal Direction: **OUT**
4, 8	Quasi HANDSHAKING for PC	Pins shorted on Controller side Signal Direction: **OUT**

3.5 Graphic User Interface, GUI OPERATION

Connect cable from Comm port of computer to RS-232 connector on rear of unit.
Power ON computer and load T&C supplied software in disk drive. (Program may be transferred to hard drive). Access Disk and run program.

AG UNIT Power on and Install program: RUN:/C:/folder name/ TCCP.exe The program will be displayed as below.

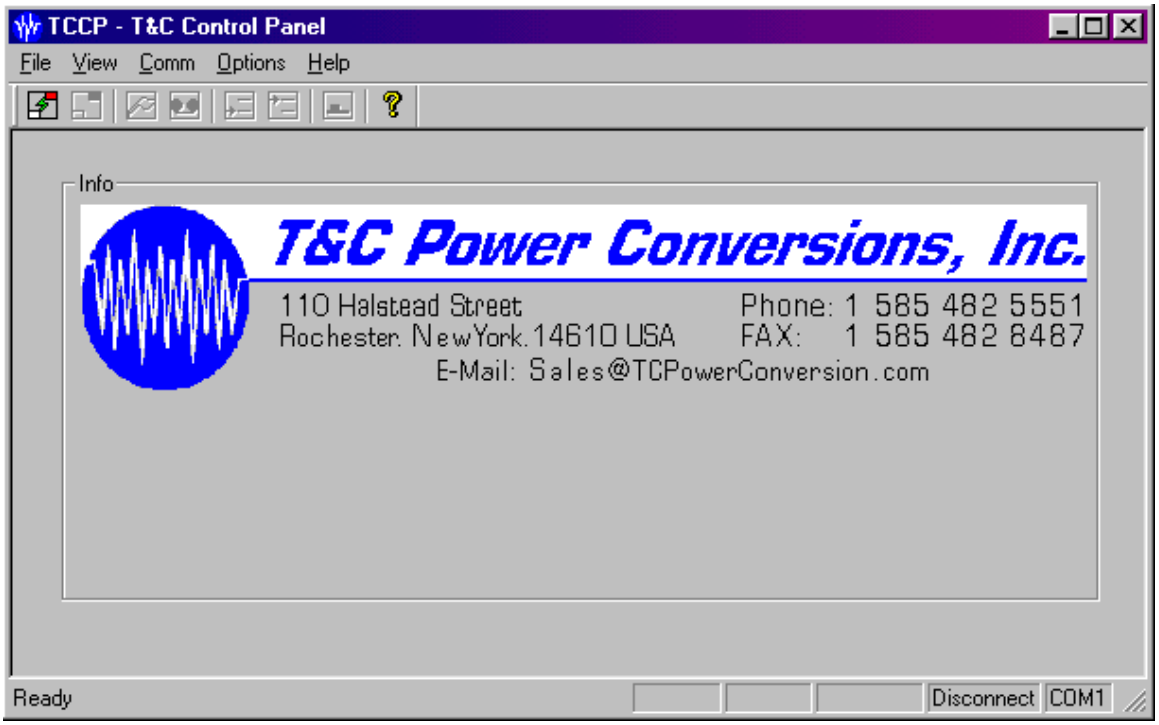

Select proper Comm port for your PC (Select COMM, then select proper port). Display 1.1 shows actual amplifier operation and settings. When the unit is first turned on the normal mode of operation is Manual Gain Control MGC (fixed gain set by % scale).

Apply RF signal to input connector. The signal should be from –20 dBm to 0dBm (0dBm for AGC operation) and within the frequency range of the unit. ***CAUTION: There will be an output. The amplifier should be terminated into a load before signal is applied.***

Interlocking features for RS-232 requires, that the AG unit and computer interface are connected and remain connected, or RF ON power will be interrupted
NOTE: this feature is optional - please request controller software with active RS232 Watchdog.

When pin 8 of the DB-25 connector is activated with a TTL-Hi signal, the DB-25 connection takes priority over both the RS-232 Remote Control (GUI), and the Front Panel Controls.

3.5.1 GUI PROGRAM FOR RS 232 INTERFACE

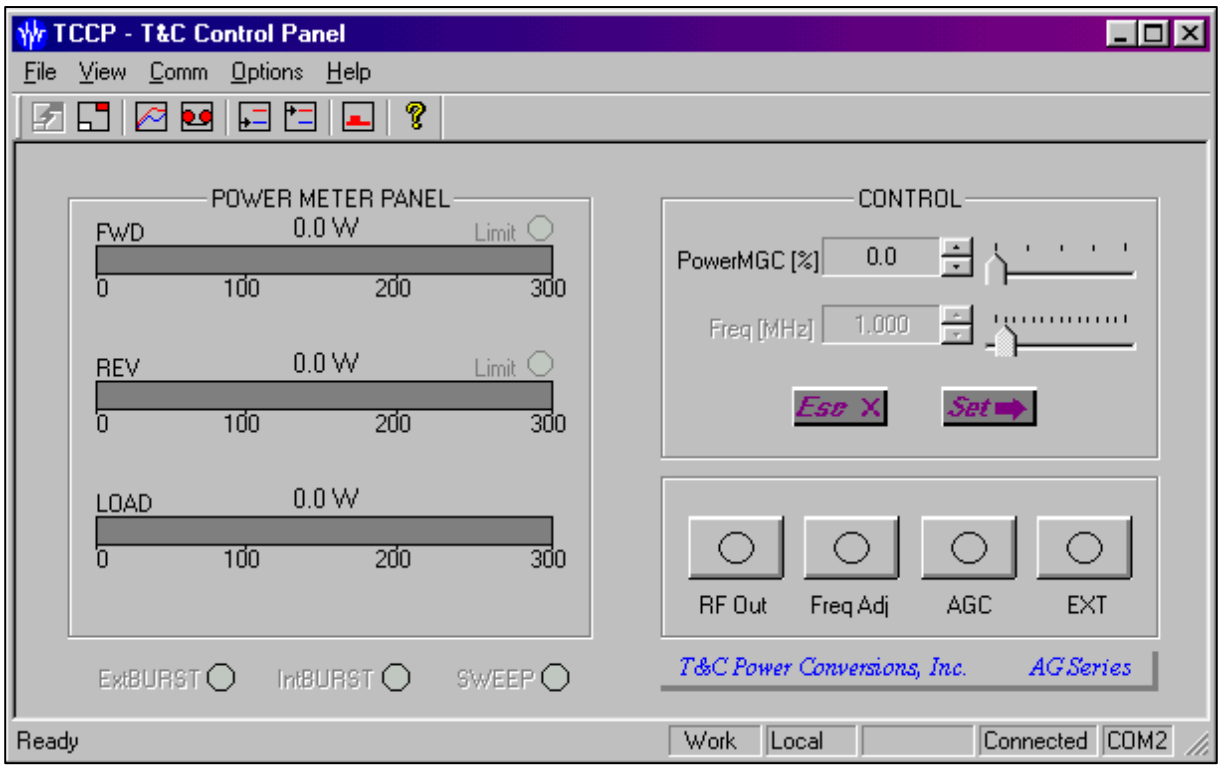

The icons on the toolbar here are short cuts to the menu above it. The toolbar can be enabled or disabled through the view tab.

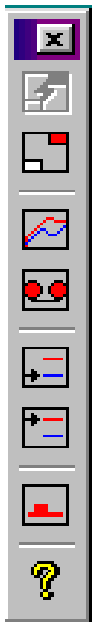

CONNECT — when not connected icon appears

DISCONNECT — will disconnect computer from unit

WAVEFORM — to switch between bar form and wave form

RECORDER — stores power level over selected time frame

SETTINGS — sets the TCCP Program Settings and the limits

LIMITS

BURST & SWEEP — opens menu for external burst, internal burst parameters, and sweep function.

REVISION

3.5.2 WORKING GUI AND ACTIVE UNIT

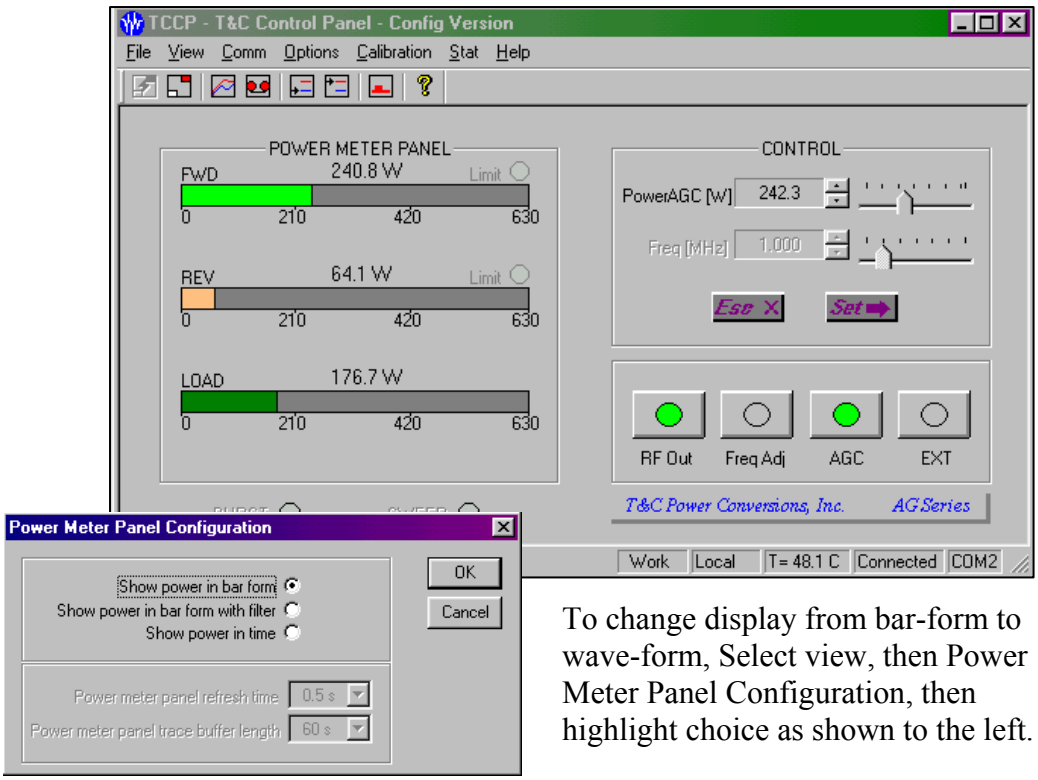

To change display from bar-form to wave-form, Select view, then Power Meter Panel Configuration, then highlight choice as shown to the left.

The above display shows power readings of forward (FWD) reverse (REV), and load power. The unit is working in Automatic Gain Control and under a 3:1 load, or 17 ohms resistive.

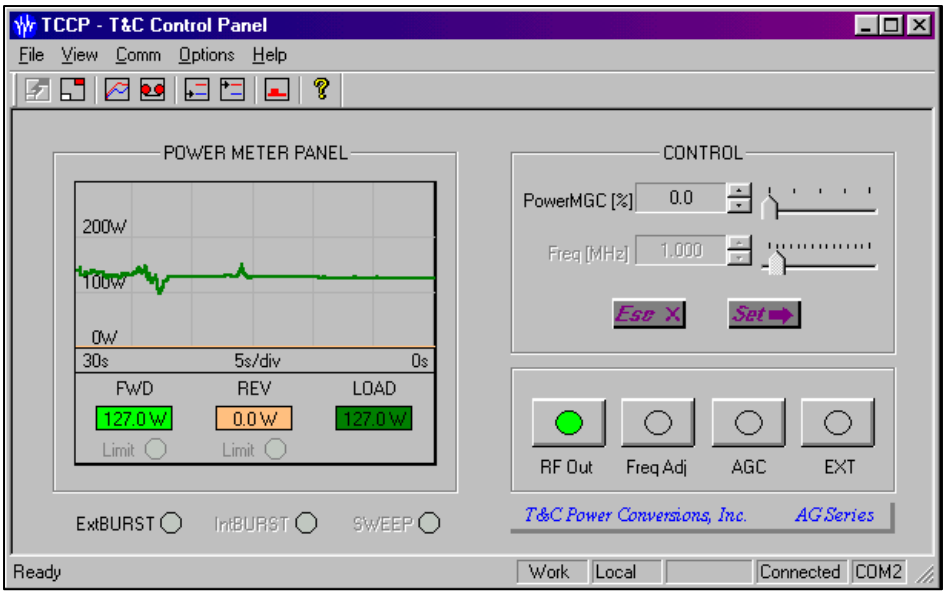

The above display is an example of power in time. Using the power meter panel configuration, the duration of power shown and refresh time can be adjusted. In this example, the panel shows the last 30 seconds and has a refresh rate of 0.5 seconds. The user can define time duration of 10 to 60 seconds and a refresh rate of 0.5 to 2 seconds.

www.tcpowerconversion.com
sales@tcpowerconversion.com

3.6 INDICATORS

The illuminated button indicates that the option is active. To activate the options simply select with pointer. Multiple options can be active at the same time.

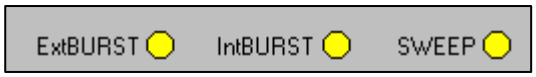

The burst and sweep function is activated using either the menu or shortcut icon. When the function is active the indicators will activate,

The limits are located above the power level bar, and will illuminate when the limits are reached. This is only an indication of maximum level reached.

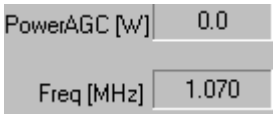

The readings in the open box displays what the current level is when "Set" is selected, when the Esc and Set buttons are blue the values are being edited.

The bottom of the screen contains information such as Working or Over-Heat, Temperature inside unit, Connection status, and Communication port.

3.6.1 CONTROLS

The box labeled "CONTROL" has two ways of adjustment, either the slide bar or the up/down arrows. This box is used for Automatic Gain Control (W), Manual Gain Control (%), and/or internal frequency generation (MHz).

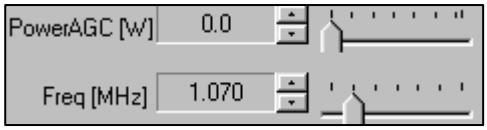

This option will become active when the values are adjusted and the Set button is selected. Another option to enter values is described below in section 2.3.

The button is used to choose which method of power generation or amplification to be used. It is possible to use all buttons together and several functions at the same time, such as AGC or MGC and Internal or External frequency. Under some conditions it is important note what option is active, for example:

In the condition when an External source is driving the unit, it is possible to adjust and Set the internal frequency with out interrupting the current signal externally applied. Then when EXT is selected the unit will immediately switch to the internal source and the frequency Set previously applied.

CAUTION: If you are operating unit at 100% in External source, and your source driving the unit is -5dBm or less, when EXT is switched off, The unit will produce full power (100%) in internal source mode. Also note the levels when switching between AGC and MGC. It is possible to set MGC to 50%(150W) and AGC to full power (300W), there for it is important to remember what the previous settings were before switching. If there is any doubt, select the RF button to turn RF power off and check values.

3.6.2 OPTIONS

The Options tab has the same selections as the toolbar. The following is a summary of each choice.

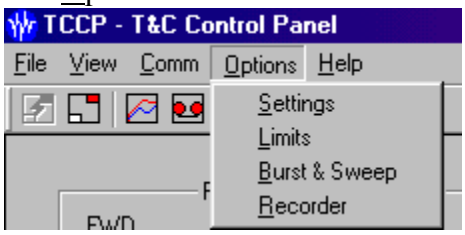

SETTINGS

Settings are used in the same way as the control panel except the values can be entered manually with the keyboard and both AGC and MGC can be "set" at the same time. This may be useful if the application requires switching between AGC and MGC mode.

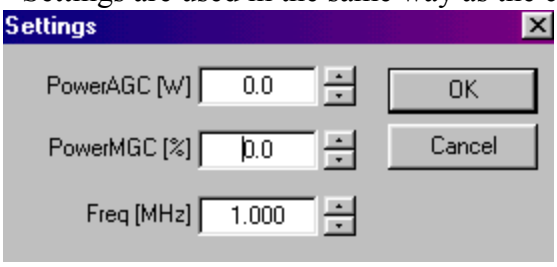

LIMITS

Limits allow the user to define the limit to be used up to the maximum default value. The AG unit has a maximum allowable power limit settings which prevents damage to the unit. The user can set any value below the default.

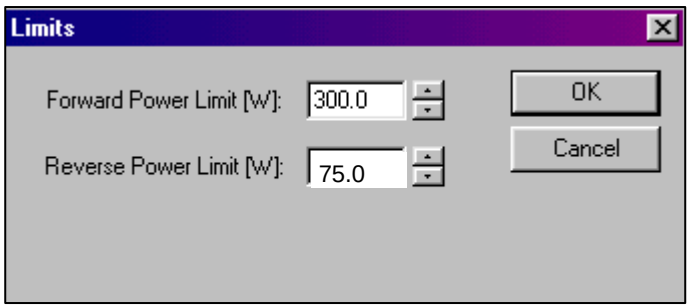

In applications where it is important to keep power levels below a specific maximum, the limit settings will be very helpful.

When settings or limits are used, and the AG unit or GUI is shut down all settings and limits will revert to the default settings.

www.tcpowerconversion.com
sales@tcpowerconversion.com

BURST & SWEEP

The burst & sweep option has choices such as External Burst, Burst Parameters, and Sweep parameters.

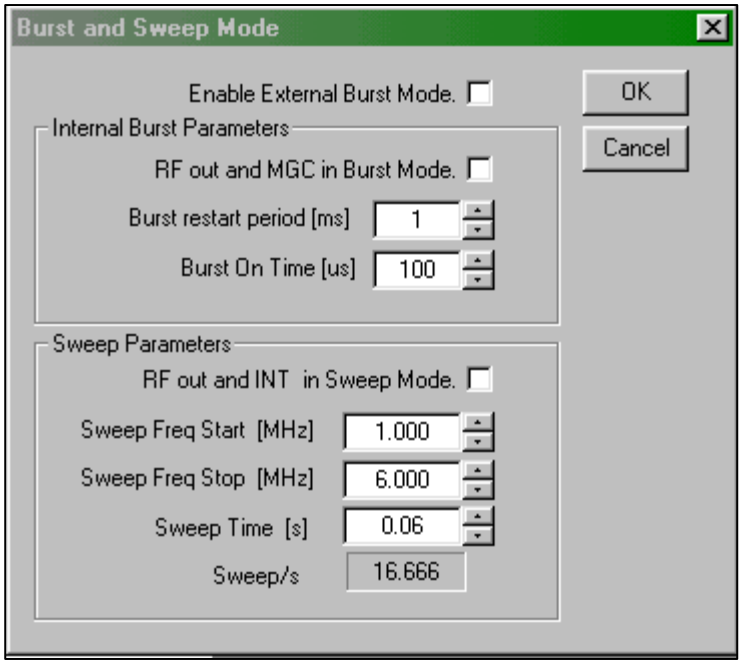

When ***External burst*** is chosen a TTL signal with a specific pulse time, and width can be applied to pin 15 of the DB-25 connector. The external burst option can be enabled by applying a TTL compatible HI to pin 16 as well. The maximum delay time between the TTL pulse and the output pules produced is 5uSec.

When ***Burst parameter*** is chosen, the unit will automatically switch to MGC mode. The internal burst function allows for 1-50uSec. Pulse time and 1-500mSec. Pulse width.

When ***sweep parameter*** is used, the unit switches to its internal frequency generator and will sweep from Sweep Frequency Start (10 kHz) to Sweep Frequency Stop (15 MHZ) in a time of .01 seconds to 10 seconds.

RECORDER or store measure.

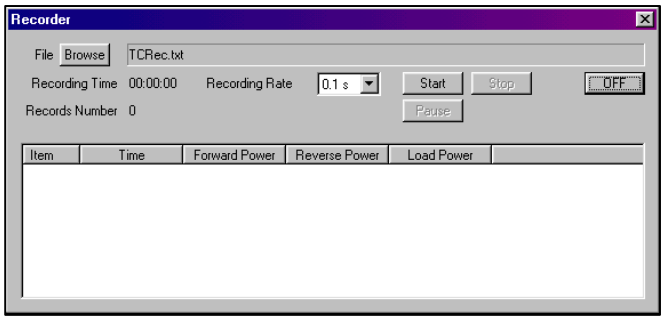

The recorder will save measurements similar to the display in notepad. This option can be set to record from a time interval of 0.1 to 2 seconds between measurements. It will begin measuring the forward, reverse and load power immediately after start is pressed, and can be paused any time during the measurements. The measured values can be viewed in notepad after the measurements are complete and stop is pressed.

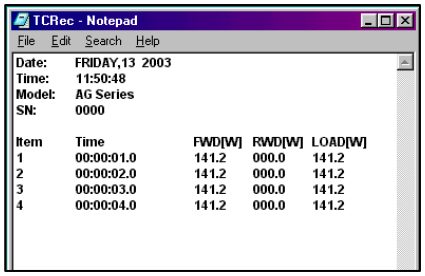

This is an example of measurements that have been sent to notepad. The recorder will use the same file each time, there for to retain information each time, the user must either save the notepad file under a different name or change the file to be used with the file "browse" selection on the recorder. The file to be used must have a .TXT extension.

3.7 RS-232 Communication Protocol RSPort V.1.61

3.7.1 Introduction

Communication between HOST (ex. PC) and the amplifier controller uses asynchronous transmission protocol. Setup of the communication port should look like the example:

Bits per second	19.200
Data bits	8
Parity	NONE
Stop bit	1
Flow controls	NONE

3.7.2 General frames format

Frame consists of five fields:

The frame is variable in length, number of bytes in a frame are between 4 and 16.

GENERAL FRAME

3.7.3 CRC Format:

CRC is calculated using a polynomial: $x^8+x^5+x^4+1$.

Field	Length	Function
HEAD	1 byte	Header of frame=96H
LEN	1 byte	Length of frame: number of bytes in fields: <CTRL, DATA, CRC> LEN=<2,14>
CTRL	1 byte	command code
DATA	<0 , 12> bytes	command parameters
CRC8	1 byte	the control sum. The generator polynomial is x8+x5+x4 +1. CRC is counting from fields = HEAD, LEN, CTRL, DATA

Below is code that updates CRC.

Bajts	1B	1B	LEN x 1B		
Field	HEAD	LEN	CTRL	DATA	CRC8
contents	0x96	[min2 : ?]	XX		XX

```
BYTE updateCRC8(BYTE data, BYTE previousCrc)
{
        // Polynomial: x^8 + x^5 + x^4 + 1

        BYTE crc = previousCrc;
        int b;

        for(b = 0; b < 8; b++) {
            if((crc ^ data) & 0x01) {
                    crc = crc ^ 0x18;
                    crc = crc >> 1;
                    crc = crc | 0x80;
            }
            else {
                    crc = crc >> 1;
                    crc = crc & 0x7f;
            }
            data = data >> 1;
        }

        return crc;
}
```

To calculate CRC pro frame, set initial CRC to 0x00, and call updateCRC8 for fields: HEAD, LEN, CTRL, ADDRESS, SUBCMD and DATA. Then write result into CRC8 field.

Below is code that updates CRC for whole command frame:

```
BYTE CalcFrameCRC(void *data, BYTE dataLength)
{
        BYTE crcTmp=0;
        BYTE i;

        for (i=0;i<dataLength;i++)
        {
                crcTmp = updateCRC8(((BYTE*)data)[i], crcTmp);
        }
        return crcTmp;
}
```


www.tcpowerconversion.com
sales@tcpowerconversion.com

Example:
Frame: " GetLIMITS" = 0x96, 0x02, 0x12, 0x49 where end_crc= 0x49

```
BYTE data[] = {0x96,0x02,0x12};      // dataLength = 3 bajts
crc = 0;
crc = updateCRC8(0x96,0x00) = 0xCC
crc = updateCRC8(0x02,0xCC) = 0xD5
crc = updateCRC8(0x12, 0xD5) = 0x49  = end_crc
```

3. COMMAND SUMARY Table:

3.8.1 Initialization

Exemplary transactions in the initialization stage.

3.8.2 Measure

Exemplary transactions for continuous measure

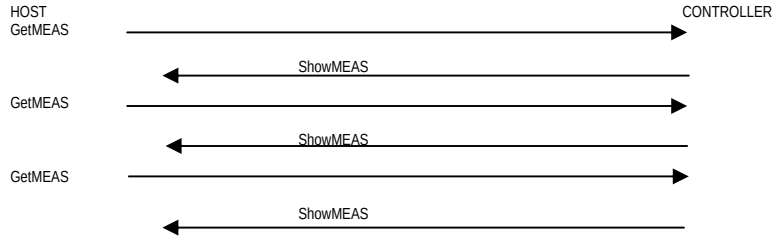

3.8.3 Setting

Exemplary transactions for setting Power Level for AGC mode.

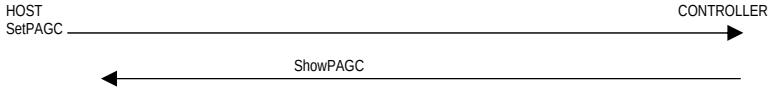

4.0 Standard working process

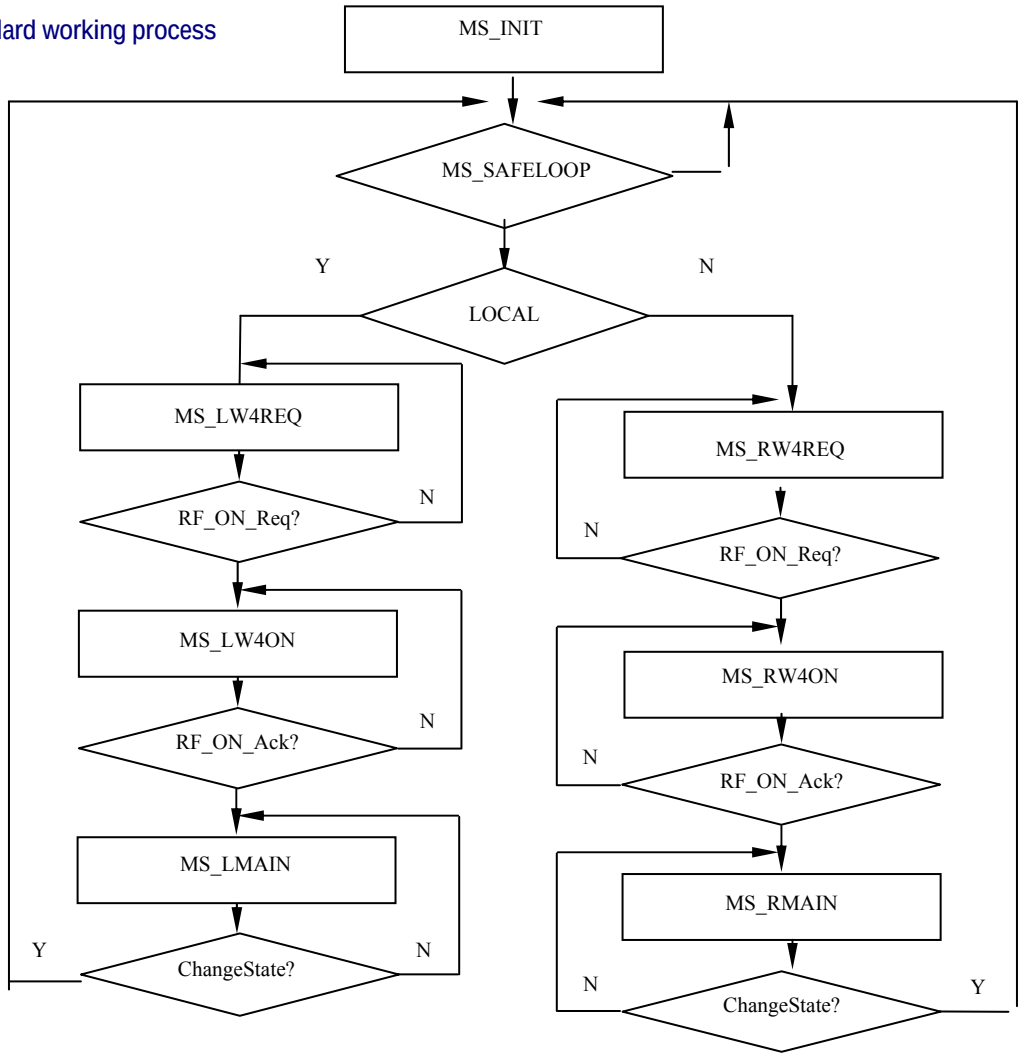

Simplified algorithm diagram for controller is shown above. Controller runs between states. Host can ask about current state using GetSTA command. Controller in response sends frame ShowSTA, where variable Main State describes current controller state:

MainState		
State	Value	Description
MS_INIT	0	Initialization.
MS_SAFELOOP	1	Controller is in safe loop.
MS_LW4REQ	2	Controller is waiting for RFPowerOn Request in LocalMode
MS_LW4ON	3	Controller is waiting for confirm of RFPowerOn in LocalMode
MS_LMAIN	4	Controller is in main loop of the LocalMode.
MS_RW4REQ	5	Controller is waiting for RFPowerOn Request in RemoteMode
MS_RW4ON	6	Controller is waiting for confirm of RFPowerOn in RemoteMode
MS_RMAIN	7	Controller is in main loop of the RemoteMode.

In states MS_RW4REQ, MS_RW4ON and MS_RMAIN, external analog port takes over controller. Only measuring process is possible in this case.
After powering up, in local mode, controller goes to MS_LW4REQ, waiting for request RFOn. Host can send this request using command SetSKEY.
When controller confirms that RF is ON, goes to MS_LMAIN. In this state RF power is ON and host can set variable using for example SetPMGC, SetPAGC, SetFREQ and can turn ON/OFF sweep or burst process by command SetSweepPar, SetBurstPar. In order to change modes between AGC/MGC or Ext/Int signal source host has to use SetSKEY command.

www.tcpowerconversion.com
sales@tcpowerconversion.com

5. INITIALIZATION :

After power up, host has to read current value of the controller internal variable, in order to synchronize variable in host and controller memory.

Examples of transactions in the initialization stage are shown below:

5.1. Host asks about operating limits.

NOTE! Limits are internal settings of maximum Forward FPL and Reflected RPL outputs.

REQUEST COMMAND →

GetLIMITS			
HEAD	LEN	CTRL	CRC
B0	B1	B2	B3
0x96	0x02	0x12	0x49

Controller sends current limits.

← RESPONSE COMMAND

ShowLIMITS											
HEAD	LEN	CTRL	DATA								CRC
B0	B1	B2	B3	B4	B5	B6	B7	B8	B9	B10	B11
0x96	10	2	FPLH	FPLL	RPLH	RPLL	nu	nu	nu	nu	xx
0x96	0x0A	0x02	0x17	0x70	0x03	0x20	0x00	0x96	0x00	0x96	0x7F

Host writes current value in memory:
< FPLH: FPLL> FPL=0x1770=> 6000*0,1=600.0W, set in HEX by B3 B4 as 0x1770
< RPLH; RPLL> RPL=0x0320=> 800*0,1= 80.0W, set in HEX by B5 B6 as 0x0320

5.2. Host asks about present level for AGC Mode.

NOTE! AGC Mode use for continues RF outputs only!

REQUEST COMMAND →

GetPAGC			
HEAD	LEN	CTRL	CRC
B0	B1	B2	B3
0x96	0x02	0x13	0x17

Controller sends current power level for AGC mode.

← RESPONSE COMMAND

ShowPAGC					
HEAD	LEN	CTRL	DATA		CRC
B0	B1	B2	B3	B4	B5
0x96	4	3	AGCH	AGCL	xx
0x96	0x04	0x03	0x05	0x4D	0x85

Host writes current value in memory:
< AGCH:AGCL > AGC=0x054D=> 1357*0,1=135.7W, set in HEX by B3 B4 as 0x054D

5.3. Host asks about present level for MGC Mode.

NOTE! MGC scale in % is for reference only. 0% - 0W, 100% full output. Not linear! This mode is for continues and pulsed operation. The only mode for BURST operation. "%" scale sets the level of RF envelope

REQUEST COMMAND →

GetPMGC			
HEAD	LEN	CTRL	CRC
B0	B1	B2	B3
0x96	0x02	0x14	0x94

Controller sends current power level for MGC mode.

← RESPONSE COMMAND

5.4. Host asks about current frequency setting.

REQUEST COMMAND →

GetFREQ			
HEAD	LEN	CTRL	CRC
B0	B1	B2	B3
0x96	0x02	0x15	0xCA

Controller sends current frequency setting.

←

RESPONSE COMMAND

ShowFREQ							
HEAD	LEN	CTRL	DATA				CRC
B0	B1	B2	B3	B4	B5	B6	B7
0x96	6	5	FreqH	FreqL	FreqHzH	FreqHzL	xx
0x96	0x06	0x05	0x13	0x88	0x00	0x00	0x75

Host writes current value in memory:

< FreqH;FreqL > req=0x1388=> 5000*1kHz =5000kHz=5.000MHz,
t in HEX by B3 B4 as 0x1388

<FreqHzH ; FreqHzL> reqHz=0x0000=> 0*1Hz=0Hz,
in HEX by B5 B6 as 0x0000

Current Frequency setting is equal: Frequency=(Freq*1kHz)+(FreqHz*1Hz)=5000kHz+0Hz=5000.0 kHz.

5.5. Host asks about current sweep parameters:

(example from 300.01 kHz to 1000.01 kHz)

→

REQUEST COMMAND

GetSweepPar			
HEAD	LEN	CTRL	CRC
B0	B1	B2	B3
0x96	0x02	0x19	0x69

Controller sends current parameters.

←

RESPONSE COMMAND

ShowSweepPar														
HEAD	LEN	CTRL	DATA											CRC
B0	B1	B2	B3	B4	B5	B6	B7	B8	B9	B10	B11	B12	B13	B14
0x96	13	9	SCODE	SStrH	SStrL	SStpH	SStpL	SCycH	SCYCL	SStrHzH	SStrHzL	SStpHzH	SStpHzL	xx
0x96	0x0D	0x09	0x00	0x03	0xE8	0x03	0xE8	0x00	0x06	0x00	0x00	0x00	0x00	0x91

Host writes current value in memory:

<SCode>	SCode =0x00 =>	Sweep mode is off, set in HEX by B3
<SStrH;SStrL>	SStr =0x03E8=>	1000*1kHz=1000kHz=1MHz, set in HEX by B4 B5 as 0x03E8
<SStpH; SStpL>	SStp =0x03E8=>	1000*1kHz=1000kHz=1MHz, set in HEX by B6 B7 as 0x03E8
<ScycH; SCycL>	SCyc=0x0006=>	6*1 step = 6 steps, set in HEX by B8 B9 as 0x0006
<SStrHzH;SStrHzL>	SStrHz=0x0000=>	0*1Hz = 0Hz, set in HEX by B10 B11 as 0x 0000
<SStpHzH;SStpHzL>	SStpHz=0x0000=>	0Hz, set in HEX by B12 B13 as 0x 0000 or Hex 0000.

Current start frequency setting is equal:

www.tcpowerconversion.com
sales@tcpowerconversion.com

5.6. Host asks about current BURST parameters:

(example 1 kHz repetition rate and 100 us RF Output BURST).
Settings ranges: for repetition BRep = 1 ms to 50 ms, for BURST ON BOn = 1 to 500 us

REQUEST COMMAND →

GetBurstPar			
HEAD	LEN	CTRL	CRC
B0	B1	B2	B3
0x96	0x02	0x18	0x37

Controller sends current parameters.

← RESPONSE COMMAND

ShowBurstPar								
HEAD	LEN	CTRL	DATA					CRC
B0	B1	B2	B3	B4	B5	B6	B7	B8
0x96	7	8	SCode	BRepH	BRepL	BOnH	BonL	xx
0x96	0x07	0x08	0x00	0x00	0x01	0x00	0x64	0xE8

Host writes current value in memory:

<Scode> SCode=0x00 => Burst mode is off, set in HEX by B3

<BRepH;BrepL> BRep =0x0001=> 1*1ms=1ms,
set in HEX by B4 B5 as 0x0001 <1to50ms range>

<BonH;BonL> Bon=0x0064=> 100*1us=100us,

5.7. Host asks about current setting of SoftKey:

REQUEST COMMAND →

GetSKEY				
HEAD	LEN	CTRL	DATA	CRC
B0	B1	B2	B3	B4
0x96	0x03	0x17	0x00	0x8E

Controller sends current state of SoftKey.

← RESPONSE COMMAND

ShowSKEY				
HEAD	LEN	CTRL	DATA	CRC
B0	B1	B2	B3	B4
0x96	3	7	SoftKey	xx
0x96	0x03	0x07	0x03	0x80

State of the SoftKey is:

SoftKey			Example
Bit	Name	Description	0x03
7	SoftOn	=1 Host takes over the keyboard of controller.	0
6	Nu	Reserved	0
5	Nu	Reserved	0
4	Nu	Reserved	0
3	Key1	=1 Key1 is on, Key is responsible for EDIT settings: 1 = FREQency, 0 = PWR (power) =0 Key1 is off.	0
2	Key0	=1 Key0 is on, Key is responsible for RF ON / OFF settings: 1 = RF ON, 0 = RF OFF	0
1	Key2	=0 Key2 is on, Key is responsible for MGC / AGC settings: 1 = MGC, 0 = AGC	1
0	Key3	=0 Key3 is on, Key is responsible for INTERNAL or EXTERNAL settings. =1 Key3 is off. 1 = INTernal, 0 = EXTernal	1

5.8. Host asks about current controller state:

REQUEST COMMAND ←

GetSTA			
HEAD	LEN	CTRL	CRC
B0	B1	B2	B3
0x96	0x02	0x1F	0XB4

Controller sends current state.

RESPONSE COMMAND →

ShowSTA						
HEAD	LEN	CTRL	DATA			CRC
B0	B1	B2	B3	B4	B5	B6
0x96	7	8	MainState	State	KeyState	xx
0x96	0x05	0x0F	0x02	0x00	0x01	0x5A

State of the Controller is:

<MainState> MainState =0x02 Controller is waiting for RFPowerOn Request in LocalMode
<State> Stat =0x00 NoError Detected and external burst is not working.
<KeyState> KeyState =0x01 Only Key3 is on.

MainState		**Example 0x02**
Value	**Description**	
0	Initialization.	
1	Controller is in safe loop.	
2	Controller is waiting for RFPowerOn Request in LocalMode	**V**
3	Controller is waiting for confirm of RFPowerOn in LocalMode	
4	Controller is in main loop of the LocalMode.	
5	Controller is waiting for RFPowerOn Request in RemoteMode	
6	Controller is waiting for confirm of RFPowerOn in RemoteMode	
7	Controller is in main loop of the RemoteMode.	

State			**Example 0x00**
bit	**Name**	**Description**	
7	fStRemote	=1 Controller works in RemoteMode, =0 Controller works in LocalMode,	0
6	fStExtBurst	=1 External Burst Mode is working. =0 External Burst Mode is not working.	0 0
5	fStRFError	=1 RFError detected, =0 RFError not detected,	0
4	fStSafetyLP	=1 error of the safety loop detected, =0 error of the safety loop not detected,	0
3	Nu	Reserved	0
2	fStExceedRP	=1 limit of the ReversePower detected, =0 limit of the ReversePower not detected,	0
1	fStExceedFP	=1 limit of the ForwardPower detected, =0 limit of the ForwardPower not detected,	0
0	fStExceedTmp	=1 temperature error detected, =0 temperature error not detected,	0

www.tcpowerconversion.com
sales@tcpowerconversion.com

SoftKey			Example
Bit	Name	Description	0x01
7	SoftOn	=1 Host takes over the keyboard of controller. =0 Controller takes over the keyboard of controller.	0
6	Nu	Reserved	0
5	Nu	Reserved	0
4	Nu	Reserved	0
3	Key1	=1 Key1 is on, Key is responsible for EDIT settings: 1 = FREQency, 0 = PWR (power) =0 Key1 is off.	0
2	Key0	=1 Key0 is on, Key is responsible for RF ON / OFF settings: 1 = RF ON, 0 = RF OFF =0 Key0 is off.	0
1	Key2	=0 Key2 is on, Key is responsible for MGC / AGC settings: 1 = MGC, 0 = AGC =1 Key2 is off.	0
0	Key3	=0 Key3 is on, Key is responsible for INTERNAL or EXTERNAL settings. =1 Key3 is off. 1 = INTernal, 0 = EXTernal	1

5.9. Host asks about current software and hardware version:

REQUEST COMMAND →

GetSVER			
HEAD	LEN	CTRL	CRC
B0	B1	B2	B3
0x96	0x02	0x1D	0X08

Controller sends current version. ←

RESPONSE COMMAND

ShowSVER									
HEAD	LEN	CTRL	DATA						CRC
B0	B1	B2	B3	B4	B5	B6	B7	B8	B9
0x96	8	13	SNH	SNL	SVerH	SVerL	DVerH	DVerL	xx
0x96	0x08	0x0D	0x01	0x23	0x01	0x67	0x00	0x04	0x46

Current version is:

<SNH;SNL> Serial Number =0x0123=291

6. MEASURE :

If host wants to know the current RF Power Levels on AG 10xx output (measure), it would ask about it sending GetMEAS frame. Controller sends only one frame for one Get-MEAS frame.

Example is shown below:

6.1. Host asks about current measured values:

REQUEST COMMAND →

Controller sends current measured value.
Response Command ←

ShowMEAS											
HEAD	LEN	CTRL	DATA								CRC
B0	B1	B2	B3	B4	B5	B6	B7	B8	B9	B10	B11
0x96	10	14	FPH	FPL	RPH	RPL	nu	nu	TPH	TPL	xx
0x96	0x0A	0x0E	0x03	0x0D	0x02	0xFC	0x00	0x00	0x03	0x26	0xFC

Measured values are equal:

<**FPH;FPL**> ForwardPower=0x030D=> 781*0,1W =78.1W,
(in HEX by B3 B4 as 0x030D)

<**RPH;RPL**> **REVERSEPOWER=0X02FC=>** 764*0,1W =76.4W,
(in HEX by B5 B6 as 0x02FC)

<**TPH;TPL**> **TEMPERATURE MEASUREMENT=0X0326=>** 806/26,4 $^{oC= 30,53\ oC}$ (”ef” o^{C})

7. SETTINGS :

7.1. Host sets power level for AGC Mode:

NOTE! AGC Mode use for continues RF outputs only!

REQUEST COMMAND →

SetPAGC					
HEAD	LEN	CTRL	DATA		CRC
B0	B1	B2	B3	B4	B5
0x96	4	3	AGCH	AGCL	xx
0x96	0x04	0x03	0x03	0xE8	0xBF

<AGCH; AGCL> AGC=0x03E8=> 1000*0,1W=100,0W
Controller sets value 100 (B3, B4) for power level in AGC mode
and responds frame ShowPAGC:
←
RESPONSE COMMAND

ShowPAGC					
HEAD	LEN	CTRL	DATA		CRC
B0	B1	B2	B3	B4	B5
0x96	4	3	AGCH	AGCL	xx
0x96	0x04	0x03	0x03	0xE8	0xBF

7.2. Host sets power level for MGC Mode:

NOTE! MGC scale in % is for reference only. 0% - 0W, 100% full output. Not linear! This mode is for continues and pulsed operation. The only mode for BURST operation. “%” scale sets in this case the level of RF envelope.
→

REQUEST COMMAND

SetPMGC					
HEAD	LEN	CTRL	DATA		CRC
B0	B1	B2	B3	B4	B5
0x96	4	4	MGCH	MGCL	xx
0x96	0x04	0x04	0x01	0xF4	0x6A

<MGCH; MGCL> AGC=0x01F4=> 500*0,1W=50,0W
Controller sets value 50% (B3, B4) for power level in
MGC mode and responds frame ShowPMGC:

www.tcpowerconversion.com
sales@tcpowerconversion.com

Response Command ←

ShowPMGC					
HEAD	LEN	CTRL	DATA		CRC
B0	B1	B2	B3	B4	B5
0x96	4	4	MGCH	MGCL	xx
0x96	0x04	0x04	0x01	0xF4	0x6A

7.3. Host sets internal frequency:

REQUEST COMMAND →

SetFREQ							
HEAD	LEN	CTRL	DATA				CRC
B0	B1	B2	B3	B4	B5	B6	B7
0x96	6	5	FreqH	FreqL	FreqHzH	FreqHzL	xx
0x96	0x06	0x05	0x13	0x88	0x00	0x7B	0xAD

Controller sets frequency:

< FREQL; FREQL> Freq=0x1388=> 5000*1kHz=5000kHz=5MHz
(in HEX by B3 B4 as 0x1388)

< FREQHZL; FREQHZL> FreqHz=0x007B=> 123*1Hz= 123Hz
(in HEX by B5 B6 as 0x007B)

Frequency setting is equal:
Frequency = (Freq*1kHz)+(FreqHz*1Hz) = 5000kHz+123Hz=5000.123kHz.

responds frame ShowFREQ.

RESPONSE COMMAND ←

7.4. sets parameters for sweep mode:

REQUEST COMMAND →

SetSweepPar														
HEAD	LEN	CTRL	DATA											CRC
B0	B1	B2	B3	B4	B5	B6	B7	B8	B9	B10	B11	B12	B13	B14
0x96	13	9	SCODE	SStrH	SStrL	SStpH	SStpL	SCycH	SCYCL	SStrHz H	SStrHz L	SStpHz H	SStpHz L	xx
0x96	0x0D	0x09	0x01	0x01	0x2C	0x00	0x64	0x00	0x07	0x00	0x0A	0x00	0x00	0xE4

Controller sets sweep parameters:

<SCODE> SCODE = 0x01
SWEEP MODE ON REQUEST, SET IN HEX by B3 as 0x0x01

<SStrH;SStrL> SStr=0x012C=> 300*1kHz=300kHz=0.3MHz,

<SStpH;SStpL> SStp=0x0064=> 100*1kHz=100kHz=0.1 MHz,
set in HEX by B6 B7 as 0x 0064

<ScycH; ScycL> SCyc=0x0007=7 Number of steps in full sweep cycle

<SStrHzH;SStrHzL> SStrHz=0x000A=> 10*1Hz=10Hz,
set in HEX by B10 B11 as 0x000A

<SStpHzH;SStpHzL> SStpHz=0x0000=> 0*1Hz=0Hz,
set in HEX by B12 B13 as 0x0000

Current start frequency setting is equal:
StartFrequency = (SStr*1kHz)+(SStrHz *1Hz)=300kHz+10Hz=300.010kHz.

Current start frequency setting is equal:
StepFrequency = (SStp *1kHz)+(SStpHz *1Hz)=100kHz+0Hz=100.000kHz.

If the sweep mode is off, controller will turn on this mode and responds frame ShowSweepPar.

RESPONSE COMMAND ←

ShowSweepPar														
HEAD	LEN	CTRL	DATA											CRC
B0	B1	B2	B3	B4	B5	B6	B7	B8	B9	B10	B11	B12	B13	B14
0x96	13	9	SCODE	SStrH	SStrL	SStpH	SStpL	SCycH	SCYCL	SStrHzH	SStrHzL	SStpHzH	SStpHzL	xx
0x96	0x0D	0x09	0x01	0x01	0x2C	0x00	0x64	0x00	0x07	0x00	0x0A	0x00	0x00	0xE4

7.5. Host sets parameters for internal burst mode:

NOTE! BURST is possible in MGC Mode only!

REQUEST COMMAND →

SetBurstPar								
HEAD	LEN	CTRL	DATA					CRC
B0	B1	B2	B3	B4	B5	B6	B7	B8
0x96	7	8	SCode	BRepH	BRepL	BOnH	BonL	xx
0x96	0x07	0x08	0x01	0x00	0x01	0x00	0x64	0x25

Controller sets burst parameter:

<SCODE> SCODE = 0x01 INTERNAL BURST MODE ON REQUEST,
set in HEX by B3 as 0x0x01

<BRepH;BRepL> BRep=0x0001=> 1*1ms=1ms, set in HEX by B4 B5 as 0x0001
(Range from 1 to 50 ms)

<BOnH;BOnL> Bon =0x0064=> 100*1us=100us, set in HEX by B6 B7 as 0x0064
(Range from 1 to 500 us)

If the burst mode is off, controller will turn on this mode and responds frame ShowBurstPar.

RESPONSE COMMAND ←

www.tcpowerconversion.com
sales@tcpowerconversion.com

7.6. Host turns on external burst mode:

NOTE! External burst switch controller to the MGC mode!

REQUEST COMMAND →

SetBurstPar								
HEAD	LEN	CTRL	DATA					CRC
B0	B1	B2	B3	B4	B5	B6	B7	B8
0x96	7	8	SCode	BRepH	BRepL	BOnH	BonL	xx
0x96	0x07	0x08	0x03	0x00	0x01	0x00	0x64	0xA6

Controller turns on external burst mode, MGC mode and stores internal burst parameters into non volatile memory:

<SCODE> SCODE = 0X03 — ENABLE EXTERNAL BURST MODE, set in HEX by B3 as 0x0x03

<BRepH;BRepL> BRep=0x0001=> — 1*1ms=1ms, set in HEX by B4 B5 as 0x0001 (Range from 1 to 50 ms)

<BOnH;BOnL> Bon =0x0064=> — 100*1us=100us, set in HEX by B6 B7 as 0x0064 (Range from 1 to 500 us)

RESPONSE COMMAND ←

7.7. RF power ON / OFF procedure (using SetSKEY):

NOTE! To synchronize settings of the controller and host, switching RF Power ON /OFF procedure should look like the example below.

STEP #1

REQUEST COMMAND →

GetSKEY				
HEAD	LEN	CTRL	DATA	CRC
B0	B1	B2	B3	B4
0x96	0x03	0x17	0x00	0x8E

Controller sends current state of SoftKey.

RESPONSE COMMAND ←

ShowSKEY				
HEAD	LEN	CTRL	DATA	CRC
B0	B1	B2	B3	B4
0x96	3	7	SoftKey	xx
0x96	0x03	0x07	0x00	0x62

<SoftKey> SoftKey=0x00, get in HEX by B3 as 0x00

STEP #2

Host sets Key0 = 1 (RF ON), disabling AG 10xx panel functions (SoftOn=1) and sends frame SoftKey = 0x84

REQUEST COMMAND →

SetSKEY				
HEAD	LEN	CTRL	DATA	CRC
B0	B1	B2	B3	B4
0x96	3	7	SoftKey	xx
0x96	0x03	0x07	0x84	0x8F

Controller sends current state of SoftKey.

RESPONSE COMMAND ←

ShowSKEY				
HEAD	LEN	CTRL	DATA	CRC
B0	B1	B2	B3	B4
0x96	3	7	SoftKey	xx
0x96	0x03	0x07	0x84	0x8F

<SoftKey> SoftKey=0x84, get in HEX by B3 as 0x84

Current SoftKey=0x84 i.e. Key0=1=on, Key1=0=off, Key2=0=on, Key3=0=on.

www.tcpowerconversion.com
sales@tcpowerconversion.com

STEP #3

Host is returning control of AG 10xx front panel back to the controller, setting SoftKey=0x04 (bit 8=0)

REQUEST COMMAND →

SetSKEY				
HEAD	LEN	CTRL	DATA	CRC
B0	B1	B2	B3	B4
0x96	3	7	SoftKey	xx
0x96	0x03	0x07	0x04	0x03

Controller sends current state of SoftKey.

RESPONSE COMMAND ←

ShowSKEY				
HEAD	LEN	CTRL	DATA	CRC
B0	B1	B2	B3	B4
0x96	3	7	SoftKey	xx
0x96	0x03	0x07	0x04	0x03

<SoftKey> SoftKey=0x04, get in HEX by B3 as 0x04

Current SoftKey=0x84 i.e. Key0=1=on, Key1=0=off, Key2=0=on, Key3=0=on.

SoftKey			Example
Bit	Name	Description	0x04
7	SoftOn	=1 Host takes over the keyboard of controller. =0 Controller takes over the keyboard of controller.	0
6	Nu	Reserved	0
5	Nu	Reserved	0
4	Nu	Reserved	0
3	Key1	=1 Key1 is on, Key is responsible for EDIT settings: 1 = FREQency, 0 = PWR (power) =0 Key1 is off.	0
2	Key0	=1 Key0 is on, Key is responsible for RF ON / OFF settings: 1 = RF ON, 0 = RF OFF =0 Key0 is off.	1
1	Key2	=0 Key2 is on, Key is responsible for MGC / AGC settings: 1 = MGC, 0 = AGC =1 Key2 is off.	0
0	Key3	=0 Key3 is on, Key is responsible for INTERNAL or EXTERNAL settings. =1 Key3 is off. 1 = INTernal, 0 = EXTernal	0

8. SIMPLIFIED ALGORITHM FOR HOST:

```
Main()
{ // Initialization.
Send_GetPAGC();
WaitFor_ ShowPAGC();
Send_GetPMGC();
WaitFor_ ShowPMGC();
Send_GetFREQ();
WaitFor_ ShowFREQ();

  //----Main loop----
while(1)
{ Send_GetMEAS();
   WaitFor_ ShowMEAS();

   If (NewPowerLevelAGC){
                    Send_SetPAGC();
            WaitFor_ ShowPAGC();
            }

   if (NewPowerLevelMGC)
            {
                    Send_SetPMGC();
            WaitFor_ ShowPMGC();
            }

   if (NewFrequency) {
                    Send_SetFREQ();

   if (Chg2AGCModeReq){
            //get current setting for SoftKey
            Send_GetSKEY();

   WaitFor_ ShowSKEY();
            //Key2=0
            SoftKey= SoftKey & 0xFD;

            //SoftOn=1
   SoftKey= SoftKey | 0x80;
   Send_SetSKEY();
   WaitFor_ ShowSKEY();
            //SoftOn=0
   SoftKey= SoftKey & 0x7F;
   Send_SetSKEY();
   WaitFor_ ShowSKEY();
}//if

} //while
}//main
```

- This page intentionally left blank -

www.tcpowerconversion.com
sales@tcpowerconversion.com

Appendix

AG 1021 Specifications

Class Of Operation
Class A to 100 Watts

Frequency Of Operation
10 kHz to 20 MHz

RF Power Output
100W from 0.015 MHz to 12 MHz of continuous linear output into any load. Up to 300W total power margin, 50 Ohm resistive load only, 20C, Pulsing only!

Gain
53 dB @ 100W / 1.0 MHz
±1 dB 20 kHz to 14 MHz (100W Out)

RF Input Drive
Typical range –30 dBm to 0 dBm, +5 dBm max

RF Input Drive for AGC
Recommended –3 dBm to 0 dBm for ±0.3 dB gain flatness

Input Drive Source
Signal or function generator, analog computer output capable of up to 1 Vp-p @ 50 Ohm (+5 dBm)

Internal RF Source
DDS oscillator: 10 kHz to 15 MHz, 1kHz resolution

Input and Output Impedance
50 Ohm

Input VSWR
2:1 max

Output VSWR
3:1 max

Output VSWR Protection
75 W max reflected power limit

Harmonic Level @ 100W
Better then - 20 dBc for 3rd harmonic, any other > -30 dBc

Harmonic Level @ 250W
- 14 dBc

Spurious Output
- 26 dBm equivalent noise level generated by internal circuits

RF Output Settings & Control
- Front Panel EDITOR and function switches for manual control,
- RS232 port for GUI or other computer communication. Rear Panel.
- SubD 25 Analog and Digital I/O . Port power scale 1V=100W. Rear Panel

RF Power Meter accuracy
± 3% typical

Output Blanking (Pulsing)
For pulsed applications, T&C amplifiers and generators offer blanking of the output signal for minimum noise RF spectrum.
Less then 1µs Rise/Fall time

BURST:
Internal Settings
Pulse range: 1 to 500 usec
Period: 1 to 50 milliseconds
User settings via GUI and RS232
External Settings
DC to > 200 kHz. User defined BURST scheme via SubD-25.
See analog port description for more details.

SWEEP operation
0.01MHz to 15 MHz. Min time 10 ms, max 10s. Settings and activation from GUI only.

RF Connectors
BNC Female: Back Panel

AC Power Connection
IEC Standard Power Entry followed by RFI filter (range 0.1MHz to 30 MHz)

AC Circuit Protection
Internally fused on the main DC Power Supply, 15A.

AC Input Current (RMS)
100 - 120 V ac, 50 - 60 Hz, 10 A
200 - 240 V ac, 50 - 60 Hz, 5 A

Cooling
Forced air, temperature controlled, heatsink temperature monitored via RS232 GUI interface.

Acoustic level:
45dBa @ Max Fan Speed @ temp.

Case
Designed to meet EMI and RFI shielding requirements AL chassis, yellow conductive finish.
Front Panel: T&C off-white.
Cover: T&C black.

Dimensions
H135mm x W254 mm x L385mm
(5.25” x 10” x 15”)

Weight: 12 kg, (26 lbs.)

Mounting
Table top, stand alone unit.
Optional: Rack Mount Kit.

Environmental conditions
Temp.: 10° to 40° C ambient
Humidity: 80%

Equipment intended for ISM applications in laboratory and light industrial environment.

AG 1021 Performance Chart

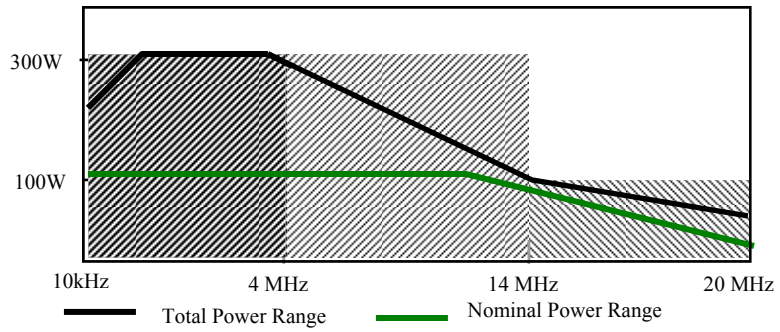

www.tcpowerconversion.com
sales@tcpowerconversion.com

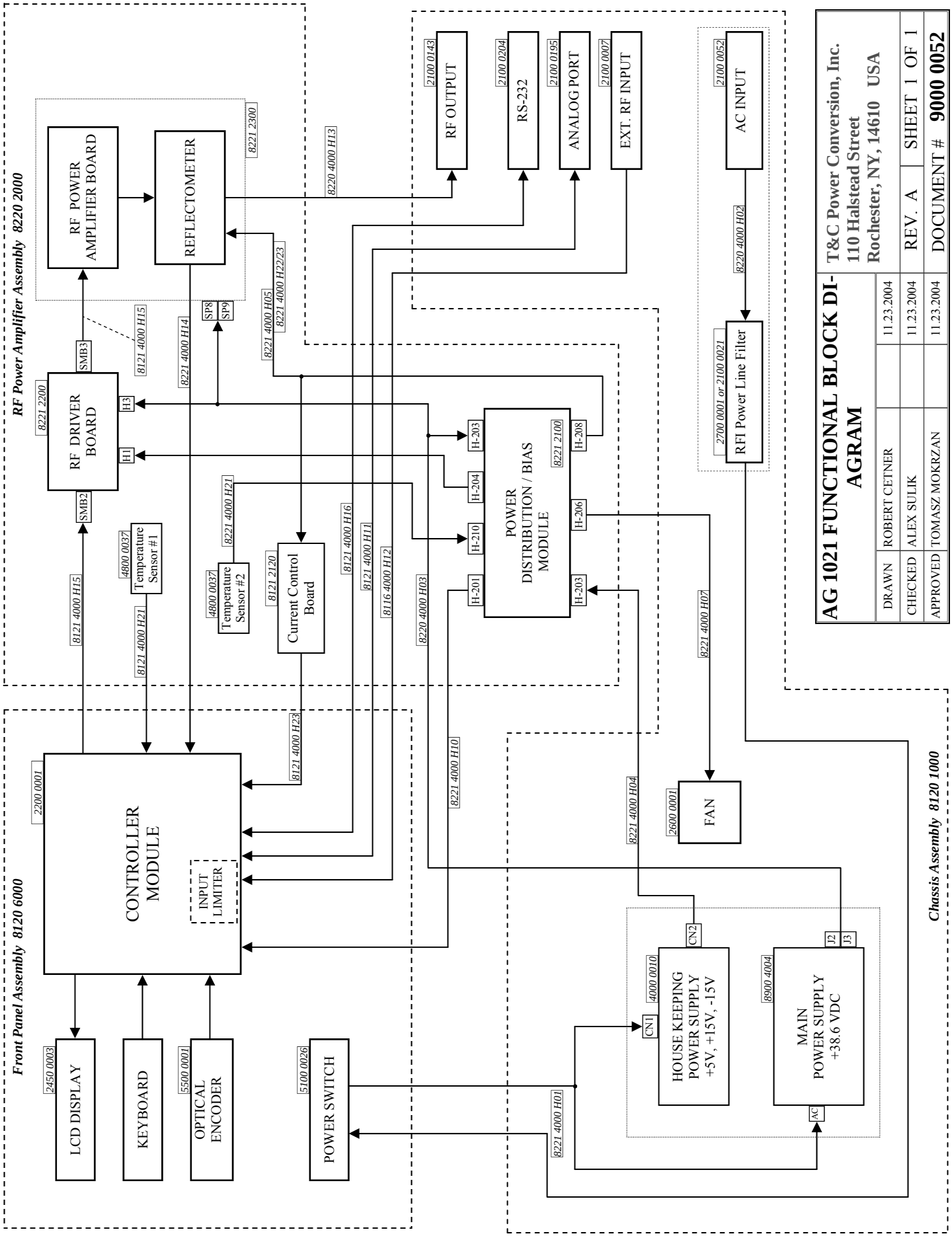
RF Power Amplifier Assembly 8220 2000
RF POWER AMPLIFIER BOARD
REFLECTOMETER
8221 2300
8220 4000 H13
2100 0143
RF OUTPUT
2100 0204
RS-232
2100 0195
ANALOG PORT
2100 0007
EXT. RF INPUT
2100 0052
AC INPUT
8220 4000 H02
2700 0001 or 2100 0021
RFI Power Line Filter
8221 2200
RF DRIVER BOARD
SMB3
SMB2
H3
H1
8121 4000 H15
8121 4000 H15
8121 4000 H14
SP8
SP9
8221 4000 H05
8221 4000 H22/23
8221 4000 H21
8121 4000 H21
4800 0037
Temperature Sensor #1
4800 0037
Temperature Sensor #2
8121 2120
Current Control Board
8121 4000 H16
8121 4000 H11
8116 4000 H12
8220 4000 H03
H-203
H-204
H-210
H-201
POWER DISTRIBUTION / BIAS MODULE
8221 2100
H-208
H-206
H-203
8221 4000 H07
Front Panel Assembly 8120 6000
2200 0001
CONTROLLER MODULE
INPUT LIMITER
8121 4000 H23
8221 4000 H10
8221 4000 H04
2600 0001
FAN
2450 0003
LCD DISPLAY
KEYBOARD
5500 0001
OPTICAL ENCODER
5100 0026
POWER SWITCH
8221 4000 H01
CN1
4000 0010
HOUSE KEEPING POWER SUPPLY +5V, +15V, -15V
CN2
8900 4004
MAIN POWER SUPPLY +38.6 VDC
J2
J3
AC
Chassis Assembly 8120 1000
AG 1021 FUNCTIONAL BLOCK DIAGRAM
DRAWN ROBERT CETNER 11.23.2004
CHECKED ALEX SULIK 11.23.2004
APPROVED TOMASZ MOKRZAN 11.23.2004
T&C Power Conversion, Inc.
110 Halstead Street
Rochester, NY, 14610 USA
REV. A
SHEET 1 OF 1
DOCUMENT # 9000 0052

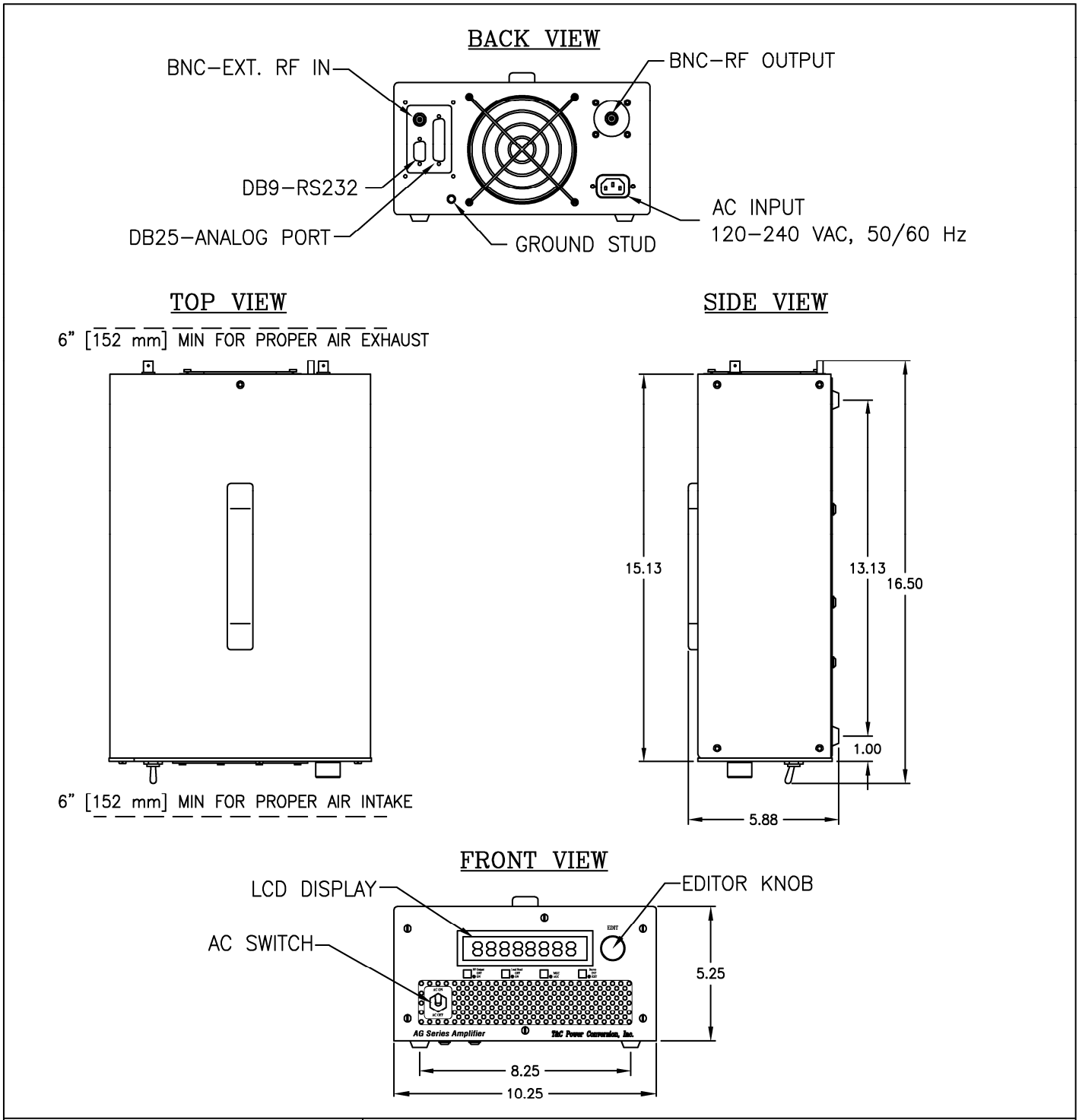

THIS DRAWING IS PROPERTY OF T&C POWER CONVERSION, INC. AND CAN NOT BE DISCLOSED OR REPRODUCED WITHOUT PRIOR WRITTEN AUTHORIZATION BY T&C POWER CONVERSION, INC.

APPROVALS	DATE
DRAWN RMS	11/22/04
CHECKED	
ISSUED	

MOUNTING AND OUTLINE
AG1006, AG1016, AG1020, AG1021

T&C Power Conversion, Inc.
110 Halstead Street, Suite 7, Rochester, NY 14610

SIZE	DWG. NO.	REV.
A	9100 0130 90	A

SCALE NONE | SHEET 1 OF 1

www.tcpowerconversion.com
sales@tcpowerconversion.com

T&C Power Conversion, Inc.
110 Halstead Street
Rochester, New York 14610 USA
Phone: 1 585 482 5551
Fax: 1 585 482 8487
e-mail: sales@TCPowerConversion.com

EC Declaration of Conformity

according to EC EMC Directive 2004/108/EC and according to EC Low Voltage Directive 2006/95/EC

We, ***T&C Power Conversion, Inc.***

of ***110 Halstead Street, # 7***
Rochester, NY 14610, USA

herewith declare, that the following product complies with the appropriate basic safety and health requirements of the EC Directive based on its design and type, as brought into circulation by us. In case of alteration of the product, not agreed upon by us, this declaration will lose its validity.

Product Description: **Amplifier Generator**

Model Number:
AG 1006 Amplifier Generator
AG 1014 Amplifier Generator
AG 1016 Amplifier Generator
AG 1020 Amplifier Generator
AG 1021 Amplifier Generator

Applicable EC Directive(s): 2006/95/EC - The Low Voltage Directive and its amending directives

2004/108/EC - The Electromagnetic Compatibility Directive and its amending directives

Applicable Harmonized **UL IEC 61010-1 Edition 3.0 2010-6**

Authorized Signature: *Tomasz Mokrzan* **Date:** 6/03/13

Name: **Tomasz Mokrzan**

Title of Signatory: **General Manager**

CE 13